CITY OF
ST AUGUSTINE
EST. 1565

HISTORIC ARCHITECTURAL REVIEW BOARD

****AMENDED****

A G E N D A

TUESDAY, JULY 15, 2025 - 1:00 PM

ALCAZAR ROOM

---

1. Roll Call
2. General Public Comments for Items not on the Agenda
3. Approval of Minutes
   a) May 19, 2025 - Regular Meeting
4. Modification and Approval of the Agenda
5. Opinion of Appropriateness
   a) HP2025-0052
      Matthews | DCCM - Applicant
      Sisters of St. Joseph, Inc. - Owner
      241 St. George Street
      To construct a new institutional building on the northern portion of the property with associated alterations and repairs to existing masonry perimeter walls and new hardscape and landscape designs.
6. Certificate of Demolition and Partial Demolition
   a) HP2025-0048
      New South Windows - Applicant
      Clevenstine Woods Joint Trust - Owner
      40 Sanford Street
      For after-the-fact wholesale replacement of windows with a different material and design.
   b) HP2025-0033
      CONTINUED FROM
      MAY 19, 2025
      WITHDRAWN
      Gloria Daniele - Applicant and Owner
      58 Riberia Street
      For partial demolition of a residential building, constructed c. 1962, that is recorded in the Florida Master Site File and contributing to the Model Land Company National Register Historic district, including replacement of the existing decorative metal porch posts and railings with a new material and design.

*c) HP2025-0039
CONTINUED FROM
JUNE 18, 2025
REQUESTING CONTINUANCE
TO AUGUST 21, 2025

Robert and Nancy Irving - Applicant and Owner
93 Kings Ferry Way
For partial demolition of a building, constructed c. 1849-1899, that is recorded in the Florida Master Site File and contributing to the Lincolnville National Register Historic District, including replacement of existing siding, windows, and reconstruction of the existing porch.

*d) HP2025-0025
CONTINUED FROM
APRIL 17, 2025
REQUESTING CONTINUANCE
TO AUGUST 21, 2025

A V S Builders, Inc. - Applicant
Elliot C. Pacetti & Wanda L. Wicker - Owner
24 Macaris Street
To demolish a residential building, constructed c. 1924-1930, that is recorded in the Florida Master Site File and contributing to the Fullerwood Park Residential National Register Historic District.

7. Certificate of Appropriateness – City owned property

*a) HP2025-0011
CONTINUED FROM
MARCH 20, 2025
REQUESTING CONTINUANCE
TO AUGUST 21, 2025

CBVR Telecom Design Group and
Cellco Partnership Successor in Interest to Verizon Wireless - Applicant
Various areas within/adjacent to existing City rights-of-way within Historic Preservation Zoning Districts 1 through 5.
To install new cell antennas and related cellular equipment in proposed locations.

8. Planning and Building Staff Communications
   a) Staff Approved Permits Report
9. Other Business
10. Next Scheduled Meeting Date(s):
    a) August 21, 2025 - Regular Meeting
11. Adjournment

Notices: In accordance with Florida Statute 286.0105: "If any person decides to appeal any decision made by the Historic Architectural Review Board with respect to any matter considered at this scheduled meeting or hearing, the person will need a record of the proceedings, and for such purpose the person may need to ensure that a verbatim record of the proceedings is made, which record includes the testimony and evidence upon which the appeal is to be based." In accordance with the Americans with Disabilities Act, persons needing a special accommodation to participate in this proceeding should contact the individual or agency sending notice not later than seven days prior to the proceeding at the address given on the notice. Telephone: (904) 825-1007 or 1-800-955-8771 (TDD).

Please note that one or more members of the City Commission or its appointed boards or committees may attend this meeting and participate, however they may not engage in a discussion or debate amongst themselves on any issue that will likely come before their respective elected or appointed body.

The materials prepared and presented are part of the City's ongoing Florida Public Records and Government in the Sunshine compliance, and are not intended to be relied upon or to reach investors or the trading markets.

CITY OF ST. AUGUSTINE

Historic Architectural Review Board Regular Meeting
May 19, 2025

The Historic Architectural Review Board met in formal session at 1:00 P.M., Monday, May 19, 2025, in the Alcazar Room at City Hall, St. Augustine, Florida. Brad Beach, Chairperson, called the regular meeting to order, and the following were present:

1. ROLL CALL: Brad Beach, Chairperson
Linda Potter, Vice-Chairperson
Paul Weaver, III
Catherine Duncan
Barbara Wingo (Alternate)

City Staff: Julie Courtney, Historic Preservation Officer
Candice Seymour, Historic Preservation Planner
Isabelle Lopez, City Attorney
Michele Fudo, Recording Secretary

---

2. General Public Comments for Items not on the Agenda

none

3. Approval of Minutes

MOTION

Mr. Weaver MOVED to APPROVE the January 22, 2025 Special Meeting minutes as presented. The motion was SECONDED by Ms. Potter.

VOTE ON MOTION:
AYES: Weaver, Potter, Wingo, Duncan, Beach
NAYES: NONE
MOTION CARRIED UNANIMOUSLY

MOTION

Mr. Weaver MOVED to APPROVE the March 20, 2025 minutes as presented. The motion was SECONDED by Ms. Duncan.

VOTE ON MOTION:
AYES: Weaver, Duncan, Wingo, Potter, Beach
NAYES: NONE
MOTION CARRIED UNANIMOUSLY

4. Modification and approval of Agenda

Item 8.a was withdrawn by the applicant

Item 8.d requested a continuance to the June 18, 2025 Meeting.

MOTION

Mr. Weaver MOVED to APPROVE the modifications to the Agenda including a continuance for item 8.d HP2025-0025. The motion was SECONDED by Ms. Duncan.

VOTE ON MOTION:
AYES: Weaver, Duncan, Wingo, Potter, Beach
NAYES: NONE
MOTION CARRIED UNANIMOUSLY

5. Public Comments related to Expedited Hearing items:

None

6. Certificate of Appropriateness for a Historic Preservation Ad Valorem Tax Exemption

6. (a) HP2025-0029 – Justin and Krista Ahmad – Applicant & Owner
66 Saragossa Street

To amend the approved Part II of a Historic Preservation Ad Valorem Tax Exemption application for the elevation and proposed rehabilitation of a residential building constructed c. 1904-1910 that is recorded in the Florida Master Site File and a contributing building to the Model Land Company National Register Historic District, to include modifying the existing enclosed front porch and dormer elements on the front facade.

Ms. Courtney read the staff report and said based on a review of the Secretary of the Interior's Standards and without the support of evidence to the contrary, staff finds the board can APPROVE a CERTIFICATE OF APPROPRIATENESS for Parts I and II of the Historic Preservation Ad Valorem Tax Exemption at 66 Saragossa Street if the HARB finds:

1. This is a qualifying property since it is listed as contributing to the Model Land Company National Register Historic District
2. The proposed scope of work to the exterior and interior of the existing building has been sufficiently clarified and complies with or is generally consistent with the Secretary of the Interior's Standards for Rehabilitation
3. The proposed work meets the criteria established by the Department of State (see last document of attachments)

With the condition:

If more replacements or alterations were performed than was indicated, or new work was proposed prior to Part III of this application being heard by the HARB, an amended project scope should be submitted for this ad valorem tax exemption application.

Justin Ahmad reviewed the application.

Ex Parte Communication: none

Public hearing was opened; however, there was no response.

The Board discussed:

- Thought that the proposal was a very good solution
- It appeared that the house would be brought back to its original design
- This was a restorative measure for the structure
- Confirmed that one side of the porch area would be walled off with no access
- Verified that the windows that were salvaged would be usable for the project
- Supported the proposed design

MOTION

Ms. Duncan MOVED to APPROVE application HP2025-0029 at 66 Saragossa Street to amend Part II of a Historic Preservation Ad Valorem Tax Exemption application for the elevation and proposed rehabilitation of a residential building constructed c. 1904-1910 that is recorded in the Florida Master Site File and a contributing building to the Model Land Company National Register Historic District. The motion was SECONDED by Ms. Potter.

VOTE ON MOTION:
AYES: Duncan, Potter, Wingo, Weaver, Beach
NAYES: NONE
MOTION CARRIED UNANIMOUSLY

7. Certificates of Appropriateness

7. (a) HP2025-0031 – St. George Street Ventures LLC – Applicant & Owner
52 St. George Street
Continued from April 17, 2025

For wholesale replacement of second and third story windows with different material.

Ms. Seymour read the staff report and said based on a review of the AGHP, and without the support of evidence to the contrary, staff finds that the board can take the following actions for a Certificate of Appropriateness at 52 St. George Street:

1. APPROVE if the HARB finds the replacement window design and material, as proposed or modified by the HARB, meets the Secretary of the Interior's Standards for Rehabilitation #9 as a compatible contemporary design.

    a. With the condition that the muntins will be on the exterior, with raised profile

Tracy Douglas and Terry Kubler reviewed the application.

Ex Parte Communication: none

Public hearing was opened; however, there was no response.

The Board discussed:

- The proposed replacement window was appropriate
- This was a very good choice for window replacement
- The casing, head jamb and sill details around the window needed to maintain the same dimensions
-

MOTION

Ms. Duncan MOVED to APPROVE application HP2025-0031 at 52 St. George Street for the wholesale replacement of the second and third story windows with a different material with the condition that staff was provided, for administrative approval, the head, sill and jamb details which were based on the drawings provided. The motion was SECONDED by Mr. Weaver.

VOTE ON MOTION:
AYES: Duncan, Weaver, Wingo, Potter, Beach
NAYES: NONE
MOTION CARRIED UNANIMOUSLY

7. (b) HP2025-0037 – Patricia Dobosz – Applicant My Tato, LLC – Owner
105 Marine Street

For after-the-fact and future window replacement and fenestration changes.

Ms. Seymour read the staff report and said based on a review of the AGHP, and without the support of evidence to the contrary, staff finds that the board can CONTINUE a Certificate of Appropriateness for the after-the-fact and future window replacement and fenestration changes at 105 Marine Street to allow the applicant time to provide additional information related to the after-the-fact and future replacement of windows and fenestration changes on the building and to consider more appropriate replacement window and door materials and designs.

Patricia Dobosz reviewed the application.

Ex Parte Communication: none

Public hearing was opened; however, there was no response.

The Board discussed:

- Thought it best to keep the historic nature of the structure by using wood replacements
- Changes would be made over time as the apartments would be renovated as they were vacated
- This application included eight windows; however, the applicant wanted to include all windows

- Wood would be the most appropriate replacement
- Previous renovations had been done as per the standards at the time
- There needed to be a window survey provided to show the character of the building
- There should be a clearer presentation going forward
- Previous renovations on the interior included window replacement that had not been reviewed by HARB
- Vinyl windows were not an option
- Look at old pictures to find a consistent pattern for replacement
- There was some flexibility with side elevations
- Window assessment for each window including the head, jamb, and sill
- Wood clad on the secondary facades
- Find a company that can do all wood windows as well as clad windows
- The slider door was not appropriate for this building
- The Board needed to give the applicant some direction for the next meeting
- Provide the window survey as well as details and samples of the proposed windows
- Needed to include in the window survey those windows that had been replaced without a permit as a condition in the motion

Ms. Duncan expressed concern that doors and windows were being replaced without approval. She wanted to know if there was a process by which those contractors could be fined.

Ms. Lopez advised that the process was to use Code Enforcement as the mechanism to administer fines. She said that if there were parts of the building that did not receive approval for the changes, those things could become code enforcement issues. She advised that clarity in the next application would alleviate many questions.

MOTION

Mr. Weaver MOVED to CONTINUE application HP2025-0037 to the June 18, 2025 meeting. The motion was SECONDED by Ms. Duncan.

VOTE ON MOTION:
AYES: Weaver, Duncan, Wingo, Potter, Beach
NAYES: NONE
MOTION CARRIED UNANIMOUSLY

7. (c) HP2025-0016 – Casey Tafuri – Applicant
Chip Shot Properties L.L.C. – Owner
32 St. Francis Street
Continued from March 20, 2025

For after-the-fact fenestration changes, including wholesale window replacement on the sides and rear; and, to replace an existing canopy on the east elevation, modify front balcony decking, reconstruct the rear access stairs with new configuration, change stucco finish from rough to smooth, and modify the existing detached garage structure.

Ms. Seymour read the staff report and said based on a review of the AGHP, and without the support of evidence to the contrary, staff finds that the board can CONTINUE an after-the-fact Certificate of Appropriateness at 32 St. Francis Street to allow the applicant time to provide additional information regarding the replacement window specifications.

John and Jeff Alman reviewed the application.

Ex Parte Communication: none

Public hearing was opened.

BJ Kalaidi wanted information to be included for the entire project when the applicant presented.

Public hearing was closed.

The Board discussed:

- The replacement window information was needed as well as the specs for the canopy and deck
- There were a number of things that were happening with the building
- The stucco change would depend on when it was placed on the building
- Needed to see designs and specs for the wood windows, stairs, and canopy
- Thought the application should be continued
- Needed to see the window configurations and how they would be installed
- The casing, jamb, head and sill details were needed
- Inquired if there were any historic photos of the building.
- There was a window survey provided in the packet for review
- The six over six windows were wood windows and the windows on the front were not being replaced

Mr. Alman asked the Board for clarity on the window selection going forward.

Ms. Duncan advised that the goal would be to match, as closely as possible, the existing windows on the building. She asked that the elevations show which windows were going to be replaced. She added that the garage door should not have windows, and should present a more carriage house look.

Ms. Courtney asked the HARB to discuss the fenestration changes.

After a brief discussion the Board determined the dormer size needed to be the same as what was existing and the window sizes should match the original on the side elevations. The stair in the back was tucked behind the building and was appropriate; however, the details needed to be provided. The garage should be more historical, and the stucco finish needed to be determined as there were several buildings on the street that had a smooth finish.

MOTION

Mr. Weaver MOVED to CONTINUE application HP2025-0016 32 St. Francis Street to the June 18, 2025 meeting. The motion was SECONDED by Ms. Potter.

VOTE ON MOTION:
AYES: Weaver, Potter, Wingo, Duncan, Beach
NAYES: NONE
MOTION CARRIED UNANIMOUSLY[1]

8. Certificates of Demolition

8. (a) HP2025-0028 – New Direction Construction LLC – Applicant
Robert P. Jr. and Angela N. Hrdlicka – Owner
27 Lovett Street
Continued from April 17, 2025

For partial demolition of a residential building, constructed c. 1917-1924, that is recorded in the Florida Master Site File and a contributing to the Lincolnville National Register Historic District, to include wholesale replacement of siding and windows with new materials and designs.

This item was withdrawn by the applicant. See item 4.

8. (b) HP2025-0036 – Reiter Roofing, Inc – Applicant
Peter Schirduan – Owner
19 Sevilla Street

For partial Demolition of a residential building, constructed c. 1917-1922, that is recorded in the Florida Master Site File and contributing to the Model Land Company National Register Historic District, including replacement of existing

[1] Break 2:38-2:47

roof material with a different material and design.

Ms. Seymour read the staff report and said based on a review of the AGHP and without the support of evidence to the contrary, staff finds that the board can APPROVE a Certificate of Demolition for Partial Demolition qt 19 Sevilla Street fi the HARB finds that the proposed metal panel roof material maintains the historic character and integrity of the structure and is compatible with the historic structure's building envelope per the Secretary of the Interior's Standards for Rehabilitation #9 (Compatible Contemporary Design).

The applicant was not present. The Chair moved this item to the end of the agenda.

MOTION

Mr. Weaver MOVED to CONTINUE application HP2025-0036 at 19 Sevilla Street to the June 18, 2025 meeting. The motion was SECONDED by Ms. Duncan.

VOTE ON MOTION:
AYES: Weaver, Duncan, Wingo, Potter, Beach
NAYES: NONE
MOTION CARRIED UNANIMOUSLY

8. (c) HP2025-0033 – Gloria Daniele – Applicant and Owner
58 Riberia Street

For partial demolition of a residential building, constructed c. 1962, that is recorded in the Florida Master Site File and contributing to the Model Land Company National Register Historic District, including replacement of the existing decorative metal porch posts and railings with new material and design.

Ms. Seymour read the staff report and said based on a review of the AGHP and without the support of evidence to the contrary, staff finds that the board can APPROVE a Certificate of Demolition for Partial Demolition at 58 Riberia Street fi the Board finds:

1. That the proposed replacement porch posts and railings maintain the historic character and integrity of the structure and are compatible with the historic structure's building envelope per the Secretary of the Interior's Standards for Rehabilitation #9 (Compatible Contemporary Design)

2. Removal of the original metal porch posts and railings will not compromise the overall historic character and integrity of the structure

Gloria Daniele reviewed the application.

Ex Parte Communication: none

12 certified notices were sent, 2 were returned in favor, 0 were returned opposed and 0 had comments.

Public hearing was opened; however, there was no response.

The Board discussed:

- The wooden post option was fine
- What was the period of significance for the Model Land Company

Ms. Courtney said there was no formal review of this property at this time.

Mr. Weaver advised that this house was not considered historic at the time that the National Register had been established, and technically, the period of significance ended in 1930.

- Could there be an aluminum railing and pole
- Fair compromise would be a wood pole with metal handrail
- Had restoration been discussed as an option

- Salvage could be an option as there were many places to find the columns rather than replacing with wood

MOTION

Mr. Weaver MOVED to CONTINUE application HP2025-0033at 58 Riberia Street to the June 18, 2025 meeting. The motion was SECONDED by Ms. Wingo.

VOTE ON MOTION:
AYES: Weaver, Wingo, Duncan, Potter, Beach
NAYES: NONE
MOTION CARRIED UNANIMOUSLY

8. (d) HP2025-0025 – AVS Builders, Inc. – Applicant
Elliot C. Pacetti & Wanda L. Wicker – Owner
24 Macaris Street
Requesting Continuance to the June 18, 2025 Meeting

To demolish a residential building, constructed c. 1924-1930, that is recorded in the Florida Master Site File and contributing to the Fullerwood Park Residential National Register Historic District.

This item was continued to the June 18, 2025 meeting. See item 4.

8. (e) HP2025-0038 – Eric Sheindling – Applicant
Kalil Land LLC – Owner
95 Chapin Street

For demolition of a residential building constructed c. 1925 that is not recorded in the Florida Master Site File or located in a district.

Ms. Seymour read the staff report and said based on a review of the AGHP and without the support of evidence to the contrary, staff finds that the board can APPROVE a Certificate of Demolition at 95 Chapin Street because it is not a local landmark or otherwise designated as a historic building.

Timothy Kalil reviewed the application.

Ex Parte Communication: none

17 certified notices were sent, 1 was returned in favor, 0 were returned opposed and 0 had comments.

Public hearing was opened; however, there was no response.

The Board discussed:

After a brief discussion there was consensus with the board to approve the application for demolition.

Mr. Weaver verified that the demolition and construction would begin immediately.

MOTION
Mr. Weaver MOVED to APPROVE application HP2025-0038 at 95 Chapin Street. The motion was SECONDED by Ms. Potter.

VOTE ON MOTION:
AYES: Weaver, Potter, Wingo, Duncan, Beach
NAYES: NONE
MOTION CARRIED UNANIMOUSLY

8. (f) HP2025-0041 – John Valdes & Associates – Applicant
Danmac LLC – Owner
156 Avenida Menedez

To demolish a residential building, constructed c. 1839, that is recorded in the Florida Master Site File and contributing to the St. Augustine National Register Historic District.

Ms. Courtney read the staff report and said based on a review of the AGHP and without the support of evidence to the contrary, staff finds that the board can take the following

actions related to a Certificate of Demolition at 156 Avenida Menendez (59 Marine Street), which includes the remaining c. 1839 building that contributes to the St. Augustine National Register Historic District, with the following finding(s):

1. If the HARB finds that the burden of proof has not been sufficiently met by the applicant in making the case to prove undue economic hardship, which can be determined with documents per City Code, Section 28-89(7) which is detailed on page 10 and/or that the building is in such a condition to justify the demolition:

To CONTINUE to allow more time for the applicant to provide additional documentation as specified by the Board

OR

2. If the HARB finds that burden of proof for undue economic hardship has been met by the applicant and/or that the case has been sufficiently made that the structure is in such a condition that the rehabilitation is not feasible, and that the demolition will not be detrimental to the historic and architectural character of the city (per City Code Section 28-89(3)(b):

To CONTINUE to allow time for plans sufficient for a Certificate of Appropriateness for the replacement buildings to be approved concurrently with this Certificate of Demolition.

John Valdes and Les Thomas reviewed the application.

Mr. Valdes gave a detailed description of the building including the significant damage to the foundation rendering the building unsafe.

Ex Parte Communication: none

15 certified notices were sent, 2 were returned in favor, 0 were returned opposed and 1 had comments.

Public hearing was opened.

BJ Kalaidi stated that Avenia Menendez had been changed over the years because of raising houses and the like. She was discouraged that the house could not be saved.

Ms. Courtney explained that the two addresses referenced in the application were listed as two contributing structures in the National Register District as well as the Florida Master Site File. She continued to give information detailing how she compiled the list of territorial buildings in the St Augustine area.

Public hearing was closed.

Mr. Weaver agreed that this was disappointing. He had verified that the colonial well was still on the property. He said that he was persuaded by the reports from the engineers that said to raise the building it would have to be reconstructed first. He agreed that unsafe and unsound structures should be destroyed. He felt that economic hardship was not necessary in this case as the engineers' reports supported the applicant's notation and he added for the record the well would be maintained.

Ms. Potter confirmed that there would be some material repurposed onto the new structure and confirmed that nothing would be discarded if it could be used in the new structure.

Ms. Wingo questioned the legal requirement to show economic hardship. She wanted clarity to show that the structure had lost its integrity; historical or structural. She did not feel that enough evidence had been presented to support the demolition.

DRAFT

Ms. Lopez advised that the criteria had been structured to support the loss of integrity whether structural or historical.

Ms. Wingo thought that anything could be rebuilt or rehabilitated. She said that there was enough historical integrity left to justify rehabilitation.

Mr. Weaver read the engineers' letter stating that to regain structural integrity much of the structure would have to be rebuilt and the historical value would be lost.

Ms. Duncan said the engineer's report stated that some of the original structure was in fair to poor condition and she asked if the demolition had been conducted in a different way, could the building have been saved.

Mr. Valdes explained the process of the demolition and said that because the original structure had deteriorated so badly, largely because of termite activity, the restoration process would produce a building that was ninety-eight percent new.

Mr. Beach expressed his disappointment with the discussion of the poor condition of the building. He asked staff to describe the threshold that would allow this building to be registered in the National Historic District.

Ms. Courtney said that there was a fifty percent rule for contributing buildings in a National Historic District.

Mr. Weaver said that this building, in its current state, was still contributing.

Ms. Duncan asked if the building could qualify as a reconstruction. She argued that the applicant had provided conceptual drawings to show what a territorial building may have looked like and said that they were going to use these drawings going forward. She thought that since the plan had been to rebuild the structure, things would have to be replaced to shore up what was remaining as in any renovation.

Mr. Thomas said that the building could be reproduced, and they would construct a building to look like the one that had been shown in the drawings.

Ms. Lopez suggested the building be built as a colonial reconstruction. She thought that this might still allow for the building to be listed as contributing.

Mr. Weaver felt if the building was demolished, the contributing status would be lost. He said if the building was reconstructed it could still be considered contributing.

A brief discussion followed to try to determine a way to maintain the contributing status of the building.
Mr. Beach asked if there was consensus to move forward with a motion.

Mr. Valdes expressed concern that parts of the building could fly off and become missiles during significant wind events.

Mr. Weaver confirmed that the intent, if demolition was approved, was to reconstruct the designs presented using as much of the salvaged materials as possible.

MOTION

Mr. Weaver MOVED to CONTINUE application HP2025-0041 156 Avenida Menendez to the June 18, 2025 meeting to provide a demolition plan for review and a list of the repurposed materials to be used. The motion was SECONDED by Ms. Potter.

<u>VOTE ON MOTION:</u>
AYES: Weaver, Potter, Wingo, Duncan, Beach
NAYES: NONE
MOTION CARRIED UNANIMOUSLY

Ms. Courtney confirmed the Board wanted Mr. Kostage at the next meeting to answer questions.

9. Planning and Building Staff Communications

9. (a) Planning and Building Staff Approved Permits Report

(Provided for informational purposes)

10. Other Business

10. (a) Letter of support request for DHR Small Matching Grant

Ms. Courtney explained that archeology was asking for a letter of support for a matching grant

There was consensus with the board to provide a letter.

10. (b) Legislative Updates

Ms. Lopez provided an update of the Live Local Act that could negatively affect the city. She advised that the bill that would place a fine for illegal demolition at twenty percent passed both houses and was waiting for a signature from the governor.

10. (c) Happy Preservation Month! (and related updates)

11. Next Scheduled Meeting Date(s)

11. (a) Wednesday, June 18, 2025 – Regular Meeting (day changed due to holiday conflict)

12. Adjournment

There being no further business, the meeting was adjourned at 5:05 P.M.[2]

_____

Brad Beach, Chairperson

[2] Transcribed by Michele Fudo

DRAFT

CITY OF ST. AUGUSTINE HISTORIC ARCHITECTURAL REVIEW BOARD

STAFF REPORT AND RECOMMENDATION

Prepared for July 15, 2025 Meeting

Approximate Limits of Construction in teal

Application HP2025-0052 Address: 241 St George Street

Applicant: Matthews | DCCM

Property Owner: Sisters of St. Joseph, Inc.

Project description: To construct a new institutional building on the northern portion of the property with associated alterations and repairs to existing masonry perimeter walls and new hardscape and landscape designs.

Architectural Style:	Gothic Revival and Mediterranean/Gothic Revival (existing and proposed)	Florida Master Site File:	SJ01916 SJ01916 A & B
National Register:	St. Augustine NRHD: Contributing (Convent)	Construction date:	c. 1874-1876 (Convent)
Archaeology Zone:	IB	Zoning District:	HP-1
Parcel number:	1992900000		
Agenda Item:	6(a)	Previous Action(s):	Several, not applicable to application

STAFF SUMMARY AND ANALYSIS:

1. This property encompasses the entire block bounded by St. George Street to the west, Cadiz Street to the north, and Aviles and Bridge Streets to the east and south respectively. The 3-1/2 story Sisters of St. Joseph Convent, centrally located on the property, was constructed c. 1874-1876. Between 1904 and 1910, the St. Joseph Academy buildings were constructed and connected to the convent by breezeways. These later portions of the academy were demolished in the early 1980s. South of the convent, the one-story Lourdes Hall was constructed c. 1964 and continued use of Gothic Revival elements, particularly in the pointed archways of the arcaded loggia that wraps around the front portion of the building.
2. For an Opinion of Appropriateness (OOA) application, the HARB must determine whether the general concept, preliminary construction plans, details, or specifications of a project meet the requirements of the Architectural Guidelines for Historic Preservation (AGHP) while recognizing that the information submitted is insufficient to meet the requirements for a Certificate of Appropriateness (COA) application or to obtain a building permit.
3. The HARB has heard many applications related to this property including window replacements and fenestration changes on the historic convent and surrounding buildings, installation of accessibility features, demolition and reconstruction of the swimming pool, and modifications to roof materials on the Archives building.
4. The architectural style proposed for the new institutional structure is a simplified Mediterranean/Gothic Revival style that includes an arcaded loggia and porte cochere with rounded archways, segmental arched windows, and stained-glass lancet windows for the chapel. The Architectural Guidelines for Historic Preservation (AGHP) encourages new construction that complements the size, color, material, and character of adjacent buildings and their historic setting. Features such as the roof form and fenestration patterns appear to complement the existing convent.
5. Architectural elements including the multi-lite wood casement windows, stucco exterior, and red standing seam metal roof are consistent with existing architectural elements on the site. More detailed specifications for these elements should be provided with the Certificate of Appropriateness application. While colored metal roofs are not generally recommended by the AGHP, they have been previously approved on buildings at this property.
6. Unlike the previous St. Joseph Academy buildings, which continued the rear ell of the convent northward then westward and were most prominent along Cadiz and St. George Streets, the proposed design steps the new building back towards Aviles Street to allow for a circular driveway off St. George Street and courtyard space between the existing and proposed structure. The orientation of the building and access from St. George Street limits impacts to the Cavedo House ruins, which is tied into the property wall at the corner of Cadiz and Aviles Streets, as well as the oldest portions of the St Joseph Academy wall on Cadiz Street. The proposed height for the structure is 46', about .7' shorter than the existing convent. The proposed building will be most prominent on Aviles and Cadiz where limited setbacks will exaggerate the mass and scale of the building in comparison to the existing convent which is not located as close to any streets.
7. A variance approval must be granted by the Planning and Zoning Board (PZB) to allow the proposed height, as well as for maximum and minimum yard requirements and lot coverage/impervious surfaces. Variances in the HP-1 zoning district may be granted for architectural/historic reasons provided that the variance is necessary for the

construction or reconstruction of buildings or structures in the appropriate historic architectural style or form, based upon review of the Historic Architectural Review Board's recommendations.

8. While the mass and scale of the proposed building are similar to the existing convent building, the flat expanse of the three story north elevation would benefit from additional articulations in addition to the proposed belt coursing.
9. The bird's eye view rendering and streetscape elevations provided oversimplify surrounding structures into box shapes that do not accurately represent their presence along the streetscape and may minimize the true visual impact of the proposed structure.
10. Impacts to the existing site required for the new construction include removal of the swimming pool, a site feature since the 1920s which was redone and screen-enclosed c. 2001-2004, and demolition of the side wing addition of a historic masonry storage building along Aviles Street.
11. Pavement materials for circular driveways, walkways, and loggia were not specified with this application. The AGHP states that appropriate paving materials are poured coquina concrete, tabby, loose coquina, crushed shells, river gravel, and brick or stone on sand. Floors for loggias and galleries may be either poured coquina concrete or tabby. Plain concrete and asphalt are not appropriate. If permeable pavers are considered, the archaeological impacts will be more significant than standard brick or stone pavers.
12. While the proposed retention pond may be necessary to control stormwater on the property, the AGHP does not specifically address this type of site feature. New site features should limit ground-disturbing impacts, complement existing site features and architecture, and avoid creating a false sense of historic development. Additional details should be provided with the Certificate of Appropriateness application relating to the design of the retention pond and alternative stormwater retention methods should be considered if feasible. The application team should work with the City's Public Works department to determine what options are allowed for this site.
13. Proposed landscaping utilizes Florida Native and pre-approved plant materials consistent with AGHP requirements.
14. A portion of the wall along Aviles Street from south of the Cavedo House ruins to the existing vehicular access gate requires repairs to fix visible bowing towards the street. The existing gate on Cadiz Street will also be improved. Plans for these changes should be provided with the Certificate of Appropriateness application.
15. The proposed work will occur within Archaeological Zone IB. Archaeological review and possible excavation are required prior to the initiation of construction activities which can be initiated with the submittal of an A-14 Application via the Planning and Building Department Application Portal. Archaeological investigations could take some time. To avoid interruptions in the construction schedule, it is recommended the applicant coordinate with the City Archaeologist and submit the A14 application as soon as possible.

STAFF RECOMMENDATION:

Based on a review of the AGHP, and without the support of evidence to the contrary, staff finds that the board can **take the following actions for an Opinion of Appropriateness at 241 St George Street**:

1. **APPROVE** if the Board finds that the general concept as proposed or modified by the HARB meets the architectural requirements of the AGHP with understanding from the applicant that a Certificate of Appropriateness application with full architectural and construction details must be approved by the HARB prior to issuance of a building permit; AND, recommending that PZB approve required variances for the building height, yard requirements, and lot coverage/impervious surfaces as proposed or modified by the HARB; OR,
2. **CONTINUE** to allow the applicant time to submit additional details as required by the Board for approval.

Candice Seymour

Candice Seymour, Historic Preservation Planner

SUMMARY SCOPE OF WORK:

1. Construct a new Gothic Revival Institutional building:
    a. 46' Tall,
    b. 11,888sf,
    c. ~216' x ~95',
    d. J-shaped floor plan with a central courtyard
    e. Stucco exterior to match existing convent
    f. Red standing seam metal roof to match existing convent
    g. Arcaded loggias with rounded archways
    h. Segmental arched multi-lite wood casement windows
2. Repairs to wall along Aviles Street south of Cavedo House Ruins
    a. Repair bowing of existing masonry wall
    b. May require careful deconstruction and reconstruction
3. Site and Landscape features:
    a. Relocation of gate along St. George Street with widening for vehicular access
    b. Circular driveway
    c. Walkways
    d. Retention Pond
    e. Landscaping (see plan provided in the Application Packet)

CITY CODES/DESIGN GUIDELINES:

ARCHITECTURAL GUIDELINES FOR HISTORIC PRESERVATION

Secretary of the Interior's Standard's for Rehabilitation 2, 3, 4, 5, 6, 7, 8, 9, and 10 apply.

2. Retention of Distinguishing Architectural Character
3. Recognition of Historic Period
8. Protection and Preservation of Significant Archaeological Resources
9. Compatible Contemporary Design for New Alterations and Additions

New Construction

New construction should complement historic architecture. Through sound planning and design, it can respect and reinforce the existing patterns of development in the local historic preservation zoning districts. Successful infill design does not have to imitate demolished or existing buildings to be successful. Rather, it picks up significant themes such as height, materials, roof form, massing, setbacks, and the rhythm of openings to ensure that a new building blends with its context.

The setting of existing historic buildings should be preserved when new construction is undertaken. The relationship of the new construction to adjacent buildings, landscape and streetscape features, and open spaces should be considered. New construction adjacent to historic buildings can dramatically alter the historic setting of neighboring buildings or the district. Such construction should not create a false sense of historical development through the use of conjectural features or stylistic elements drawn from other buildings. New construction is appropriate as long as it does not destroy significant historic features, including designed landscapes, and complements the size, color, material, and character of adjacent buildings and their historic setting.

Site Plans and Building Setbacks

Buildings in historic districts often share common front and side setbacks. Commercial buildings are generally set directly on the property lines, creating a wall effect. In locating new buildings, the front and side setbacks should be maintained and aligned with the facades of surrounding historic buildings.

Height, Width and Massing

The height of buildings, particularly at the block level, should be similar. The height of new construction should be compatible with surrounding historic buildings.

The width of new construction should be compatible with surrounding historic buildings.

The overall size, shape and massing of new construction should be compatible with surrounding historic buildings.

Horizontal Rhythms

Repeated elements on neighboring buildings is characteristic of buildings in Florida. Divisions between upper and lower floors, uniform porch heights, and alignment of windows and window sills are examples of such rhythms. New construction in historic districts should maintain or extend these strong shared streetscape elements in blocks where they appear.

Roof Forms

Similar roof form and pitch are characteristics of buildings in historic districts. Nearly all residential buildings have pitched roofs, with gable or hip the predominant type. Gambrel, pyramidal and clipped gable (jerkinhead) are also found. In contrast, commercial buildings generally have flat roofs with parapets. Roof designs should be compatible with surrounding buildings. Sloped roofs with pitches similar to those of nearby buildings are appropriate for new residential construction. Flat roofs with the roof plane hidden from view on the front facade are appropriate for new commercial buildings.

Proportion of Openings

Window openings in historic districts often share similar size, spacing and shape. On many buildings, particularly the Colonial Revival and other classically inspired styles, windows are stacked, with a narrow space between them. Other styles, particularly the Queen Anne, exhibit randomly placed openings. Storefronts have wide horizontal windows and little or no spacing between openings, providing a greater transparent area. In designing new construction, the proportion of spacing to openings on adjacent buildings should be maintained.

Materials

Materials that are compatible in quality, color, texture, finish and dimension to those common to the district should be used.

Architectural Styles for New Construction

Buildings may not use distinctive design elements and features from a period different from the one being reproduced. While it may be appropriate for some later period details to be included on an earlier period building to reflect its evolution over time, it is never appropriate to place earlier period features on a later period building.

HP-1

The diversity of styles exhibited in this district reflects historic development patterns which includes colonial settlement, single family residences, vacation homes for seasonal residents, and an institutional and military presence. ***Permitted styles in HP-1 include: Spanish and British period Colonial, Frame Vernacular, St. Augustine Colonial Revival, Queen Anne, Mediterranean-influenced styles including Moorish Revival, Italian Renaissance, Spanish Colonial Revival, Mission, Mediterranean Baroque and Spanish Renaissance; Garage Apartment as a secondary main building; and Bungalow. New construction shall be in the style of the adjacent properties or as approved by HARB from the list of styles described above and represented in the HP-1 District.*** For the purpose of this section, immediately adjacent refers only to properties located along the same street, or for corner lots, only properties located along the streets which comprise the intersection.

Gothic Revival (1850-1920)

This style reached a height of popularity in the United States from 1840 to 1870. It remained a favored style for religious and educational buildings well into the twentieth century. There are several variations on this style including **Carpenter Gothic** and Collegiate Gothic. Architects Andrew Jackson Downing, Alexander Jackson Davis and Richard Upjohn produced several pattern books adapting this style for modest domestic uses. These pattern books, published in the 1830s, 1840s and 1850s, led to the development of the Carpenter Gothic style.

Identifying features of the **Gothic Revival** style include steeply pitched gable roofs, often with one or more intersecting cross-gables; decorative bargeboard work in the gables; open eaves; wood siding, often board-and-batten; one story entrance or end porch; and varied window treatments including lancet, cantilevered oriels, and double hung sash windows, often with diamond pane glazing. Shutters are common.

Identifying features of the **Carpenter Gothic** style include extensive use of sawn wood ornamentation on the bargeboards, eaves, and porch and balcony railings; steeply pitched gables and diagonal paned windows of Gothic architecture combined with the intricate decorative woodwork of the early Victorian Era; and multi-hued paint schemes. The steeply pitched gables lend pronounced vertical emphasis to these buildings. The term "carpenter" refers both to the extensive use of sawn wood ornamentation and the fact that these buildings were usually designed by craftsmen, not architects.

Buildings are not constructed directly on the street, although the size of yards varies.

The most common building plans are rectangular, L-shaped and U-shaped. Buildings range from one and one-half to two and one-half stories. Buildings feature tall, narrow windows and doors, often with pointed arches. The style emphasizes vertical elements in the facade.

Foundations are coquina, brick or continuous masonry which may be finished with stucco. Construction is masonry or wood frame. **Exterior finishes** are plain or ashlar joint stucco, brick, marble, stone, drop siding, weatherboards or board-and-batten siding with corner boards. A local church tower is finished with wood shingles.

Roof type is steeply pitched gable. **Roof surfaces** are covered with wood shingles, composition shingles, diamond composition shingles, metal standing seam, or corrugated metal. Chimneys are brick, and may be finished with stucco.

Windows may be lancet or oriel, fixed or casement diamond multi-pane, or double hung sash two-over-two. Attic louvers, transoms and sidelights are also used. Leaded stained glass may be used. Exterior shutters are common.

Detailing is extensive and includes prominent gables, oriel windows, massive chimneys, pointed elliptical arches, towers and battlements, crenelation, jigsawn trim on eaves and gable ends, and leaded stained glass.

Mediterranean Influence Styles (1885-1940)

Mediterranean-influenced styles of architecture include **Mediterranean Baroque, Spanish Renaissance Revival, Moorish Revival, Italian Renaissance (Venetian Renaissance), Spanish Colonial Revival and Mission**. Florida's Spanish heritage and semi-tropical climate favored the use of Mediterranean designs. The roots of Mediterranean-influenced architecture in Florida can be traced to the Spanish Renaissance Revival, Italian Renaissance and Moorish Revival churches and hotels built in St. Augustine in the 1880s.

Identifying features of Mediterranean-influenced architecture include clay tile roofs; stucco exterior walls; straight or arched windows; iron window grilles and balconies; arcades; ceramic tile decoration; and ornate, low relief carvings highlighting arches, columns, window surrounds, cornices and parapets. In St. Augustine, windows are usually tall casements or double hung sash. Fanlights are sometimes used over doors. An arch motif is common on windows, doors and porch colonnades.

The Spanish Renaissance Revival style was brought to St. Augustine by Henry Flagler, and makes extensive use of poured coquina concrete walls, red terra cotta tile roofs, complex building massing, monumental entries, towers, turrets, vertical windows and doors, galleries, loggias and balconies, intricate detailing, and rounded arches.

Buildings are not usually constructed directly on the street, although the size of yards varies.

Building plans are rectangular or irregular. Buildings are two to four stories.

Foundations are continuous masonry or brick. Construction is unfinished poured coquina concrete or masonry.

Exterior finishes are brick, stucco or the unfinished coquina concrete.

Roofs are gable, hip, or flat with a parapet. Pitched roof surfaces are covered with composition shingles, barrel tile or interlocking tile. Flat roof surfaces are built up. Chimneys are brick.

Windows are double hung sash five-over-five or one-over-one, or fixed multi-pane casement. Fanlights and transoms are common. Iron window grilles and balconies are common.

Detailing includes plaster and terra cotta highlighting on arches, columns, window surrounds, cornices, and parapets; wrought iron grilles, balconies and balconets. Decorative carving on the facade is also common.

Fences, Walls and Gates

Do... Retain and repair existing historic fences, walls and gates.

Don't...

- Remove historic fences and walls.
- Install cinder block walls; or ornate iron or wood, rough cedar, chain link, wire or post and rail fences.
- Install fences of inappropriate scale that obscure the overall design of the building or its individual features.

Post-1821

Fences, walls and gates must match the architectural style of the primary building. Original fences and walls should be replicated.

The only materials permitted are stucco over masonry, poured coquina or tabby concrete, coquina stone, wood and iron. The level of detail should be appropriate for style of the primary building. Fences should be painted white or left unpainted. Walls may be painted white or left natural.

Ornate cast iron fences are appropriate only for Queen Anne, Colonial Revival, Classical Revival and other highly styled buildings.

Masonry walls are appropriate for Spanish Renaissance Revival and Moorish Revival buildings.

Parking, Landscaping and Site Features

Do...

- Retain distinctive features such as size, scale, mass, color and materials of buildings, including roofs, porches and stairways.
- Retain landscape features such as parks, gardens, street lights, benches, walkways, streets, alleys, and setbacks that have traditionally linked buildings to their environment.
- Use new plant materials, fencing, walkways, street lights, and benches that are compatible with the character of the district or neighborhood in size, scale, materials and color.
- Identify and retain plants, trees, fencing, walkways, street lighting and benches that reflect a property's history and development.
- Base new site work on documentation or physical evidence. Avoid conjectural changes to the site.
- Remove or trim plants in close proximity to the building that may cause deterioration of historic fabric.
- Provide proper site and roof drainage to assure that water does not splash against the building or foundation walls, or drain toward the building.
- Landscape to provide shade, privacy, screening of non-historic features and erosion control.
- Minimize disturbance of terrain around buildings or elsewhere on the site, thus reducing the possibility of destroying or damaging important landscape features or archaeological resources.
- Survey and document areas where the terrain will be altered to determine the potential impact to important landscape features or archaeological resources.
- Replace in kind an entire feature of the site that is too deteriorated to repair if the overall form and detailing are still evident. Physical evidence from the deteriorated feature should be used as a model to guide the new work.

This could include a walkway or fountain. If using the same kind of material is not technically or economically feasible, then a compatible substitute material may be considered.

- Replace deteriorated or damaged landscape features in kind.
- Design and construct a new feature of a site when the historic feature is completely missing, such as an outbuilding, terrace or driveway. It may be based on historical, pictorial and physical documentation; or be a new design that is compatible with the historic character of the building and the site.
- Design new onsite parking, loading docks or ramps when required by the new use so that they are as unobtrusive as possible and assure the preservation of the historic relationship between the buildings or buildings and the landscape.

Don't...

- Remove or radically change site features which are important in defining the overall historic character of the property so that the character is diminished.
- Introduce heavy machinery into areas where it may disturb or damage important landscape features or archaeological resources.
- Fail to survey the building site prior to the beginning of rehabilitation work which may result in damage to or destruction of important landscape features or archaeological resources.
- Construct a new site feature that is incompatible with the district or building because of its size, scale or materials.
- Destroy the relationship between buildings and their setting by widening historic streets, changing paving material or by introducing inappropriately located new streets and parking lots that are incompatible with the character of the historic area.
- Install street lighting, benches, new plant materials, fencing, walkways, and paving material such as asphalt and pebble that are out of scale or are inappropriate to the historic district.
- Change the appearance of a building or site by removing historic plants, trees, fencing, walkways, outbuildings and other features before evaluating their importance.
- Add conjectural landscape features to the site such as period reproduction lamps, fences, fountains or vegetation that is historically inappropriate, thus creating a false sense of historic development.
- Create a false historic appearance because the replacement feature is based on insufficient historical, pictorial or physical documentation.
- Introduce a new landscape feature, including plant material, that is visually incompatible with the site, or that alters or destroys the historic site patterns or vistas.
- Locate any new construction of the building where important landscape features will be damaged or destroyed, such as removing a lawn and walkway and installing a parking lot.
- Place parking facilities directly adjacent to historic buildings where automobiles may cause damage to the buildings or to important landscape features.
- Introduce new construction onto the building site which is visually incompatible in terms of size, scale, design, materials, color and texture; which destroys historic relationships on the site; or which damages or destroys important landscape features.

Post-1821

Plant materials should reflect the scale of the building. Only those plant materials known to have been introduced around the date of construction of the primary building should be planted. Design concepts that reflect the architectural style of the building should be used for landscape and garden design. Trees should be used to frame views and provide shade. The use of mid-yard planting beds, coarse textured plants and colorful flowers is appropriate for 19th century buildings. Foundation plantings are not appropriate for pre-1930 buildings.

Trees, shrubs and vine covered trellises are appropriate and effective ways of providing shade for patios and buildings.

Wells should be masonry finished with stucco. Fountains are not appropriate in spaces open to the public. Wells may have splashing water that is not visible above the lip of the well to provide interest, but should not contain visible water jets or fountains.

Masonry bench seating is appropriate within loggias.

Floors for loggias and galleries may be either poured coquina concrete or tabby.

Appropriate paving materials are poured coquina concrete, tabby, loose coquina, crushed shells, river gravel, and brick or stone on sand. Asphalt and plain concrete are not appropriate.

Parking areas should not be adjacent to or easily viewed from public rights-of-way. Paved areas and curb cuts must be kept to a minimum. Fences, walls, gates, landscaping and buildings must screen parking areas. Whenever possible, parking should occur behind or within a building. Appropriate paving materials include loose coquina, crushed shell, gravel, stone or brick pavers on sand, coquina or tabby concrete, or concrete with a slate appearance. Asphalt and plain concrete are not appropriate.

MUNICIPAL CODE SEC. 28-29(b): Variances (used by the Planning and Zoning Board (PZB))

(1) *Requirements for grant of* variance. The board may grant a variance only under circumstances where practical difficulty or unnecessary hardship is so substantial, serious and compelling that relaxation of the general restrictions should be granted; provided, however, that no variance may be granted for maximum lot coverage requirements within any historic preservation districts 1, 2 and 3, except variances may be obtained: 1) for school, church and governmental agency uses and 2) to provide for handicapped accessibility for buildings constructed prior to December 19, 2019. No variance shall be granted unless the applicant shall show and the board shall find that:

a. The particular property, because of size, shape, topography or other physical conditions, suffers singular disadvantage through the operation of this section, which disadvantage does not apply to other properties in the vicinity; and

b. Because of this disadvantage, the owner is unable to make reasonable use of the affected property; and

c. This disadvantage does not exist because of conditions created by the owner or applicant; and

d. Grant of the variance will not be contrary to the public interest; will not adversely affect other property in the vicinity; and will be in harmony with the spirit, intent and purpose of this section.

In passing upon a request for variance, the board shall not consider prospective financial loss or gain to the owner or applicant, nor shall the board by variance permit to be established or carried on in any use district an activity, business or operation which is not otherwise allowed in such district by a specific provision of this chapter.

Within the historic preservation zoning districts 1, 2 and 3 and national register districts, the board may grant a request for variance for architectural or historic reasons, provided that the variance is necessary for the construction or reconstruction of buildings or structures in the appropriate historic architectural style or form, based upon review of the historic architectural review board's recommendations. The board shall find that granting the variance will not be contrary to the public interest; will not adversely affect other property and structures in the district; and will be in harmony with the spirit, intent and purpose of this section.

LIST OF ATTACHMENTS:

1. Staff Photographs
2. Florida Master Site File (Mother House)
3. Sanborn Maps

Staff Photographs
241 St. George Street

Existing Gate and Project Site Behind from St. George Street

Staff Photographs
241 St. George Street

Existing Gate and Project Site Behind From St. George Street

Staff Photographs
241 St. George Street

Existing Gate and Project Site Behind From St. George Street

Staff Photographs
241 St. George Street

Existing Gate Details

Staff Photographs
241 St. George Street

Existing Mother House Gate Details

Staff Photographs
241 St. George Street

Project Site Behind From St. George Street Looking Southeast

Staff Photographs
241 St. George Street

Project Site Behind From St. George Street Looking Southeast

Staff Photographs
241 St. George Street

Existing Gate and Project Site Behind From St. George Street

Staff Report pg. 18

Staff Photographs
241 St. George Street

Existing Gate and Project Site From Northwest Corner of Convent

Staff Photographs
241 St. George Street

Existing Gate and Project Site From North Side of Convent

Staff Photographs
241 St. George Street

Existing Gate and Project Site From North Side of Convent

Staff Report pg. 21

Staff Photographs
241 St. George Street

Project Site Facing North

Staff Report pg. 22

Staff Photographs
241 St. George Street

Project Site Facing North

Staff Report pg. 23

Staff Photographs
241 St. George Street

Staff Report pg. 24

Staff Photographs
241 St. George Street

Staff Report pg. 25

Staff Photographs
241 St. George Street

Staff Report pg. 26

Staff Photographs
241 St. George Street

Project Site Facing East, Shed Roofed Addition to be Removed

Staff Photographs
241 St. George Street

West Elevation of Existing Convent

Staff Photographs
241 St. George Street

West Elevation of Existing Convent

Staff Photographs
241 St. George Street

West Elevation of Existing Convent

Staff Report pg. 30

Staff Photographs
241 St. George Street

North Elevation of Existing Convent

Staff Photographs
241 St. George Street

Northwest Elevation of Existing Convent

Staff Report pg. 32

Staff Photographs
241 St. George Street

Southwest Elevation of Existing Convent

Staff Report pg. 33

Staff Photographs
241 St. George Street

South Elevation of Existing Convent

Staff Report pg. 34

Staff Photographs
241 St. George Street

East Elevation of Existing Convent

Staff Report pg. 35

Staff Photographs
241 St. George Street

Southeast Elevation of Existing Convent

Staff Photographs
241 St. George Street

Lourdes Hall Southwest Elevation

Staff Photographs
241 St. George Street

Lourdes Hall Northwest Elevation

Staff Report pg. 38

Staff Photographs
241 St. George Street

Staff Photographs
241 St. George Street

Lourdes Hall North Elevation

Staff Report pg. 40

Staff Photographs
241 St. George Street

Staff Photographs
241 St. George Street

Staff Report pg. 42

Staff Photographs
241 St. George Street

Other Areas of Convent Property Facing Northeast

Staff Report pg. 43

Staff Photographs
241 St. George Street

Other Areas of Convent Property

Staff Photographs
241 St. George Street

Other Areas of Convent Property

Staff Report pg. 45

Staff Photographs
241 St. George Street

View of Property from Aviles Street

Staff Report pg. 46

Staff Photographs
241 St. George Street

View of Property from Aviles Street

Staff Photographs
241 St. George Street

Views of Property from Aviles Street

Staff Photographs
241 St. George Street

Wall to be Repaired Along Aviles Street

Staff Photographs
241 St. George Street

Wall to be Repaired Along Aviles Street and Cavedo House Ruins

Staff Report pg. 50

Staff Photographs
241 St. George Street

Wall along Cadiz Street

Staff Report pg. 51

Staff Photographs
241 St. George Street

Wall along Cadiz Street

Staff Report pg. 52

Staff Photographs
241 St. George Street

Wall along Cadiz Street

Staff Photographs
241 St. George Street

Wall and Gate along Cadiz Street

Staff Report pg. 54

Staff Photographs
241 St. George Street

Wall along Cadiz Street

Staff Report pg. 55

Staff Photographs
241 St. George Street

Aerial Photographs

Staff Photographs
241 St. George Street

Aerial Photographs

Staff Report pg. 57

Staff Photographs
241 St. George Street

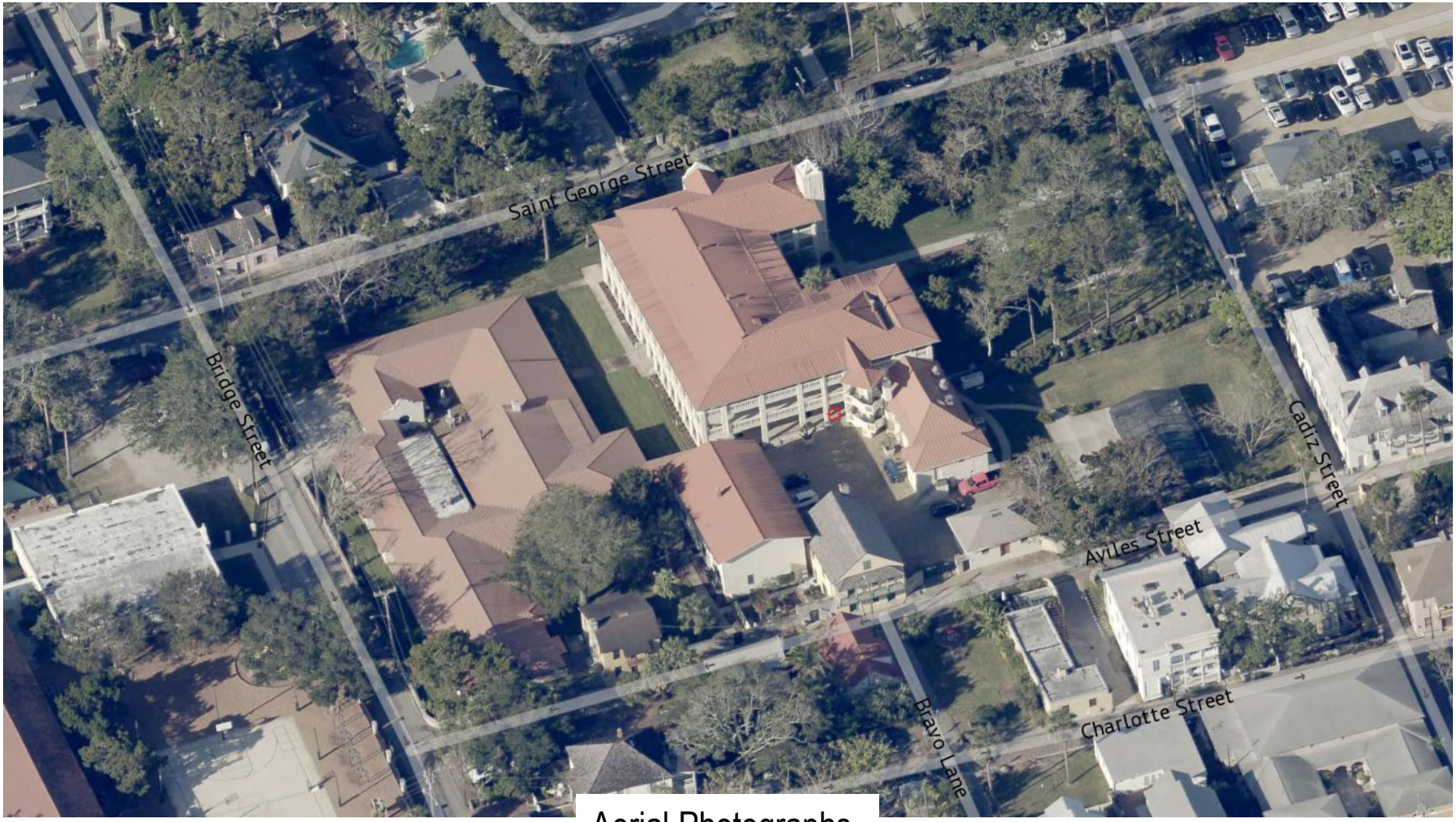

Aerial Photographs

Staff Photographs
241 St. George Street

Aerial Photographs

SEE SITE FILE STAFF FOR ORIGINAL PHOTO(S) OR MAP(S)

FLORIDA MASTER SITE FILE
HISTORIC ST. AUGUSTINE PRESERVATION BOARD
HISTORIC PROPERTIES INVENTORY FORM

I. LOCATION & LEGAL DESCRIPTION

FDAHRM 802== Site No. 8SJ1916 1009==

Site Name: St. Joseph's Academy and Convent 830== Survey Date: 7809 820==

Address: 241 St. George Street, St. Augustine, FL 32084 905==

Instructions for Locating:

813== County: St. Johns 808==

Location: City of St. Augustine (subdivision) 35 (block) Shares block 35 with the (lot) 868==

following buildings: Cavedo House Ruins, O'Relly House, and Toledo House. 868==

Owner of Site: Name: Convent School;

Address: 241 St. George Street

St. Augustine, FL 32084 902==

Occupant or Manager: 904==

Type of Ownership: Institutional 848== Zoning: HP-1

NR Classification Category: Building 916== Recording Date: 832==

UTM: 17 (zone) 469860 (easting) 3306480 (northing) 890== Location: T07S (T) R30E (R) S18 (S) 812==

Map Reference: USGS St. Augustine 7.5 MIN 1956 (PR 1970) 809==

Recorder: Name & Title: Nolan, David (Historic Sites Specialist);

Address: H.S.A.P.B. 818==

II. SITE DESCRIPTION

Condition of Site:

( ) Excellent 863==
(x) Good 863==
( ) Fair 863==
( ) Deteriorated 863==

Integrity of Site:

(x) Altered 858==
( ) Unaltered 858==
(x) Original Site 858==
( ) Restored - Date: 858==
( ) Moved - Date: 858==

Threats to Site:

( ) Zoning 878==
( ) Development 878==
( ) Deterioration 878==
( ) Borrowing 878==
( ) Transportation 878==
( ) Fill 878==
( ) Dredge 878==
( ) Other 878==

II. SITE DESCRIPTION, continued.

Original Use: Religious 838== Present Use: Religious/Educational 850==

Date: ±1876 844== Period: 19th cent. 845== Culture: American 840==

Architect: 872==

Builder: 874==

Style: Gothic Revival 964==

Plan Type: U-shape 966==

Exterior Fabrics: Stucco (plain & ashlar scored), brick, BEC ceilingboard, marble 854==

Structural Systems: Masonry, concrete block and stone (coquina) 856==

Features of Structure: (942)

Window Type: Metal awning, DHS 2/2, transom & sidelights 942==

Foundation: 942==

Roof Type: Hip (old section), mansard (new section) 942==

Secondary Roof Structures: Dormers, hip; porches, shed; porches, gable 942==

Porches & Balconies: Two-story open porches on academy building. 942==

Chimney Location: End, interior, lateral slope 942==

Materials: (882)

Chimney: Brick 882==

Roof Surfacing: Composition shingles, metal (standing seam) 882==

Ornament Exterior: Round & gothic arches on porches, iron work 882==

Quantitative Data: (950-954)

Chimneys: 952== Dormers: 954== Stories: 3-3½ 950==

Other: 956==

Surroundings: Residential 864==

Relationship to Surroundings: On narrow bridk roads in one of the oldest sections of the city. 859==

III. PHOTOGRAPHY

Photographic Records Numbers: 860==

Contact Prints

IV. SIGNIFICANCE

Areas of Significance: Architecture, Religion, Education, Women, Blacks.

920==

Statement of Significance: (911==)

ARCHITECTURE

This three-and-one-half story Gothic Revival Academy-complex at 241 St. George Street was constructed during 1874-76 (the Convent) and between 1904 and 1910 (the Academy Buildings). The oldest building, the convent, is one of the last large coquina buildings constructed in St. Augustine. The Gothic "U-shaped" three-story buildjng consist of pointed arched windows and a three-story bay with a mission parapet. A one-story open front porch with pailed columns with capitals extends from the front. The Academy Buildings were originally built around 1910 with wooden porches. In 1947 the porches were replaced by two-story concrete additions with round and Gothic arches. Enclosure added at the same time unified the complex. The remodeling was one of the last uses of the poured concrete technique. Ornamental iron work also adorns the structures and a two-story portico accents the entrance to the school building. The complex is surrounded by narrow brick roads and is located in one of the oldest sections of the city.

The area of the colonial city south of the plaza and north of Bridge Street includes buildings ranging from colonial to modern times. It contains a significant number of St. Augustine's surviving colonial buildings as well as many fine Victorian buildings from the Flagler era like the development along Palm Row. Some remodeling and construction have taken place in the St. Augustine Colonial Revival style. The narrow colonial street plan is retained, and some of the streets are still surfaced in brick. Aviles Street retains some colonial ambiance with many buildings constructed on the street line, with overhanging balconies, and coquina walls. The visual effect of other streets tends to be mixed Colonial and Victorian, except along the bayfront, which is dominated by modern motels. Along this stretch of the bayfront are the last surviving buildings projecting out over the water. It is an area of combined usages--residential, commercial, educational and religious--all of which produce traffic and parking problems. As a result, many significant buildings, particularly Flagler era hotels and mansions, have been demolished over the years for parking lots or other facilities. The area is bounded on the west by the old Alcazar Hotel (now City Hall) and on the east by the seawall and bayfront. It is part of the National Landmark District, and listed on the

V. BIBLIOGRAPHY

1. Kathleen Deagan, et. al, "A Sub-Surface Survey of the St. Augustine City Environs," (Tallahassee, 1976); Anon., "S. Augustini pars et terrae Florida," 1588.

2. Juan Jose Elixio de la Puente, "Plano . . . de la Plaza de San Agustin," January 22, 1764; Mariano de la Rocque, "Plano Particular de la Ciudad de San Agustin," April 25, 1788; East Florida Papers, Escrituras, 1784-1821; Albert Manucy, The Houses of St. Augustine, 1565-1721 (St. Augustine, 1962), pp. 22-25 and 41-47.

National Register of Historic Places.

HISTORY

This section of the walled colonial city has been continuously occupied since the 16th century and represents the location of the 1565 settlement of St. Augustine. The small blocks and narrow streets of the early city are still evident.(1) All structures were destroyed during the 1702 attack by the South Carolinians, but by mid-century, the Rosario defense line had been erected along the present-day location of Cordova Street, and numerous buildings had been rebuilt throughout the area, although density was greater towards the bayfront. In the 18th and early 19th centuries, this section contained a number of governmental and ecclesiastical structures, including La Soledad parish church and school on St. George Street and the hospital and jail on Aviles (Hospital) Street. Moreover, the largest number of extant colonial buildings are found in this section of the city: Hourritiner, MacMillan, and Murat Houses on St. George Street; Segui, Fatio, O'Reilly, and Toledo Houses on Aviles Street; Solano House on Charlotte Street; and the Jacinto House on Marine Street. The southern border of this area, Bridge Street, led to one of three late colonial San Sebastian River ferry crossings.(2) Certain patterns of earlier development persisted into the American period as this section, particularly on Aviles Street, contained a disproportionately large number of public and educational facilities such as the Territorial City Council Meeting House, and in the late 19th century, the Peabody School, city jail, library, and police and fire departments. St. Joseph's Academy opened in the 1870's on St. George Street. Several prominent hotels also opened in this section, including the Ocean View on the bayfront and the St. George adjacent to Trinity Episcopal Church. Since the Civil War, St. George Street has remained a residential neighborhood and contained some stately homes of the city's more prominent residents and visitors. The streets to the east have contained some residences, but mainly commercial and institutional buildings. The area as a whole has one of the largest concentrations of 18th and 19th century structures within the walled city despite the demolition of several of the stately residences and hotels along St. George Street and Avenida Menendez (Bay Street).(3)

St. Joseph's Academy and Convent at 241 St. George Street is a direct outgrowth of a call to the sisterhood by Bishop Augustin Verot. The Sisters were summoned from Verot's birthplace in Le Puy, France, solely for the purpose of educating and caring for the Negro population of the city.(4) Eight sisters arrived in St. Augustine in September of 1866. The Sisters were housed in a decrepid little building on St. George Street which had been the home of their predesessors, the Sisters of Mercy. (The building was demolished years later and is now the site of the Barnett Bank parking lot). Within a short time the Sisters were established in a house on Aviles Street, a bequest to the parish by Father Michael O'Reilly who died in 1812. The will stated "I bequeath and give the two stone houses, with their orange grove, which border on the South and West of Hospital Street and that of the Government, in order that their produce should go to the help of building a house for Nuns, for education according to the plan of St. Francis de Sales with its institution of the Visitation. . ."(6)

By January, 1867, the sisters opened a school for black children in a stone building on St. George Street behind the O'Reilly House.(7) The French education, under the leadership of Sister Sidonia, continued to work from these buildings for approximately ten years when the new convent was completed. With the laying of the cornerstone in 1874, construction commenced on the three-story coquina building. The conditions leading to the establishment of the convent-school included both the need for community education and the legal transfer of property in 1876 to the Sisters of St. Joseph as stipulated in Father O'Reilly's will. A free school for poor children was continued for borders and day pupils after the opening of the academy.(8) The schools remained part of the public school system until 1913.(9) An article in 1937 describes the original public school building. Notable is the use of the coquina from the walls of the first school house for colored children. The wall around the convent, fashioned from stone, still remains.

> "Where St. Joseph's Academy now raises its imposing structure, formerly stood an old, dilapidated cottage which poor people often occupied, rent free; the old Penelton house in which the first, second and third grades of girls of the Sisters public school were taught, and a comparatively new building erected to house the boys of the public school. All the structures were demolished with the exception of the latter which was moved to Aviles Street, next to the Old Don Toledo House.
>
> "The coquina in the present stone fence on St. George Street was originally in the building which served as the first school house for colored children in the State of Florida, and which was on the property given to the Sisters in 1867. This structure was also the music hall and was situated on St. George Street, northwest of the parlors (then the chapel) and separated from it by a concrete wall."(10)

Around 1839 the sisters of St. Joseph were compelled by court order to purchased some property north of the convent-academy. The land owner, John Pendleton, insisted that the sisters comply with the deed drawn up by Bishop Moore which promised future purchased of the land. Although somewhat untimely, the transaction was completed and the land made available for future expansion.(11) By 1910 two new buildings were erected on the property for school rooms and boarding. The former convent-academy became solely a residence for the sisters. A center gate opened into a courtyard with the new buildings on the north and east ends of the lot and the old "U-shaped convent forming the southern boundary.(12) In 1947 the buildings were remodeled to achieve architectural harmony throughout the complex. The center gate was moved to Academy entrance and another gate installed for the convent. The shcool has since outgrown the campus and plans to move to a new site outside the city.

---

3. Anon., "Copy of a Plan of the City of St. Augustine," 1833; 1885 and 1894 Birds-Eye Views; Sanborn Fire Insurance Maps, 1884-1958.

4. "Living Waters; 1866-1966." Printed by the Sisters of St. Joseph, St. Augustine, Florida. No page numbers.

5. Michael V. Gannon, The Cross in the Sand. (Gainesville, 1965) p. 17.

6. "Living Waters."
7. Interview by Karen G. Harvey with Sister Mary Albert, October 13, 1978.

8. St. Augustine Record, Sunday July 4, 1937.
9. "Living Waters."
10. Record, July 4, 1937.
11. Record in Archives of Sisters of Saint Joseph, Sister Mary Albert, Archivist.
12. Sanborn Fire Insurance Maps, 1904, 1910, 1917, 1924, 1830, 1956.

☐ Original
☒ Update

HISTORICAL STRUCTURE FORM
FLORIDA MASTER SITE FILE
Version 4.0 1/07

Site #8 SJ01916
Field Date 5-13-2016
Form Date 5-13-2016
Recorder #

Shaded Fields represent the minimum acceptable level of documentation.
Consult the *Guide to Historical Structure Forms* for detailed instructions.

Site Name(s) (address if none) ST JOESPHS ACADEMY AND CONVENT Multiple Listing (DHR only)
Survey Project Name Inv. of Structures within the St. Augustine NRHD Survey # (DHR only)
National Register Category (please check one) ☒building ☐structure ☐district ☐site ☐object
Ownership: ☐private-profit ☐private-nonprofit ☐private-individual ☒private-nonspecific ☐city ☐county ☐state ☐federal ☐Native American ☐foreign ☐unknown

LOCATION & MAPPING

	Street Number	Direction	Street Name	Street Type	Suffix Direction
Address:	241		St George	Street	

Cross Streets (nearest / between)
USGS 7.5 Map Name ST. AUGUSTINE USGS Date 1956 Plat or Other Map
City / Town (within 3 miles) St. Augustine In City Limits? ☒yes ☐no ☐unknown County St. Johns
Township 7S Range 30E Section 18 ¼ section: ☐NW ☐SW ☐SE ☐NE Irregular-name:
Tax Parcel # 1992900000 Landgrant
Subdivision Name Block Lot
UTM Coordinates: Zone ☐16 ☒17 Easting ☐☐☐☐☐☐ Northing ☐☐☐☐☐☐☐
Other Coordinates: X: Y: Coordinate System & Datum
Name of Public Tract (e.g., park)

HISTORY

Construction Year: 1876 ☐approximately ☐year listed or earlier ☐year listed or later
Original Use Church/Temple/Synagogue From (year): To (year):
Current Use Church/Temple/Synagogue From (year): To (year):
Other Use From (year): To (year):
Moves: ☐yes ☒no ☐unknown Date: Original address
Alterations: ☒yes ☐no ☐unknown Date: Nature
Additions: ☒yes ☐no ☐unknown Date: Nature
Architect (last name first): Builder (last name first):
Ownership History (especially original owner, dates, profession, etc.)

Is the Resource Affected by a Local Preservation Ordinance? ☒yes ☐no ☐unknown Describe

DESCRIPTION

Style Gothic Revival Exterior Plan Number of Stories 3-3.5
Exterior Fabric(s) 1. BEC ceiling board 2. Brick 3. Stucco, marble
Roof Type(s) 1. Hip 2. Mansard 3.
Roof Material(s) 1. Composition shingles 2. Sheet metal:standing seam 3.
Roof secondary strucs. (dormers etc.) 1. 2. Dormers, hip; porches, shed, gable
Windows (types, materials, etc.) pointed arched openings frame wide wood lancet windows w/ paired 6-light casement on upper floors; 1st flr. casements host single light & decorative
Distinguishing Architectural Features (exterior or interior ornaments) Round & gothic arches on porches, iron work; segmented coquina columns with ionic capitals; smooth stucco exterior;

Ancillary Features / Outbuildings (record outbuildings, major landscape features; use continuation sheet if needed.) large walled complex with mature trees and landscaping

DHR USE ONLY	OFFICIAL EVALUATION	DHR USE ONLY
NR List Date ☐Owner Objection	SHPO – Appears to meet criteria for NR listing: ☐yes ☐no ☐insufficient info Date Init. KEEPER – Determined eligible: ☐yes ☐no Date NR Criteria for Evaluation: ☐a ☐b ☐c ☐d (see *National Register Bulletin 15*, p. 2)	

HISTORICAL STRUCTURE FORM

Site #8 SJ01916

DESCRIPTION (continued)

Chimney: No.____ Chimney Material(s): 1. ____ 2. ____

Structural System(s): 1. Concrete block 2. Coquina block 3. Masonry - General

Foundation Type(s): 1. Continuous 2. ____

Foundation Material(s): 1. ____ 2. masonry general

Main Entrance (stylistic details) pointed arched opening frames paired wood doors with square panels and lancet windows with divided pointed transom

Porch Descriptions (types, locations, roof types, etc.) three story side and rear walkways/porches with lancet arch openings on the first floor and dec. balustrade on second and third floor; front entrance porch contains round cogina columns supporting hip roof with central three story tower accented w/ iron

Condition (overall resource condition): ☐excellent ☒good ☐fair ☐deteriorated ☐ruinous

Narrative Description of Resource See original form by David Nolan for additional history

Archaeological Remains ____ ☐Check if Archaeological Form Completed

RESEARCH METHODS (check all that apply)

☒FMSF record search (sites/surveys)	☒library research	☐building permits	☒Sanborn maps
☐FL State Archives/photo collection	☒city directory	☒occupant/owner interview	☐plat maps
☒property appraiser / tax records	☒newspaper files	☐neighbor interview	☐Public Lands Survey (DEP)
☒cultural resource survey (CRAS)	☒historic photos	☐interior inspection	☐HABS/HAER record search

☐other methods (describe) ____

Bibliographic References (give FMSF manuscript # if relevant, use continuation sheet if needed) ____

OPINION OF RESOURCE SIGNIFICANCE

Appears to meet the criteria for National Register listing individually? ☒yes ☐no ☐insufficient information

Appears to meet the criteria for National Register listing as part of a district? ☒yes ☐no ☐insufficient information

Explanation of Evaluation (required, whether significant or not; use separate sheet if needed) Retains integrity and could contribute to district

Area(s) of Historical Significance (see *National Register Bulletin 15*, p. 8 for categories: e.g. "architecture", "ethnic heritage", "community planning & development", etc.)

1.____ 3.____ 5.____

2.____ 4.____ 6.____

DOCUMENTATION

Accessible Documentation Not Filed with the Site File - including field notes, analysis notes, photos, plans and other important documents

1) Document type ____ Maintaining organization ____
Document description ____ File or accession #'s ____

2) Document type ____ Maintaining organization ____
Document description ____ File or accession #'s ____

RECORDER INFORMATION

Recorder Name Patricia Davenport Affiliation Environmental Services, Inc.

Recorder Contact Information 7220 Financial Way Ste. 100 Jacksonville, FL 32256 904-470-2200, pdavenport@esinc.cc
(address / phone / fax / e-mail)

Required Attachments

❶ USGS 7.5' MAP WITH STRUCTURE LOCATION PINPOINTED IN RED

❷ LARGE SCALE STREET, PLAT OR PARCEL MAP (available from most property appraiser web sites)

❸ PHOTO OF MAIN FACADE, ARCHIVAL B&W PRINT OR DIGITAL IMAGE FILE

If submitting an image file, it must be included on disk or CD AND in hard copy format (plain paper is acceptable). Digital image must be at least 1600 x 1200 pixels, 24-bit color, jpeg or tiff.

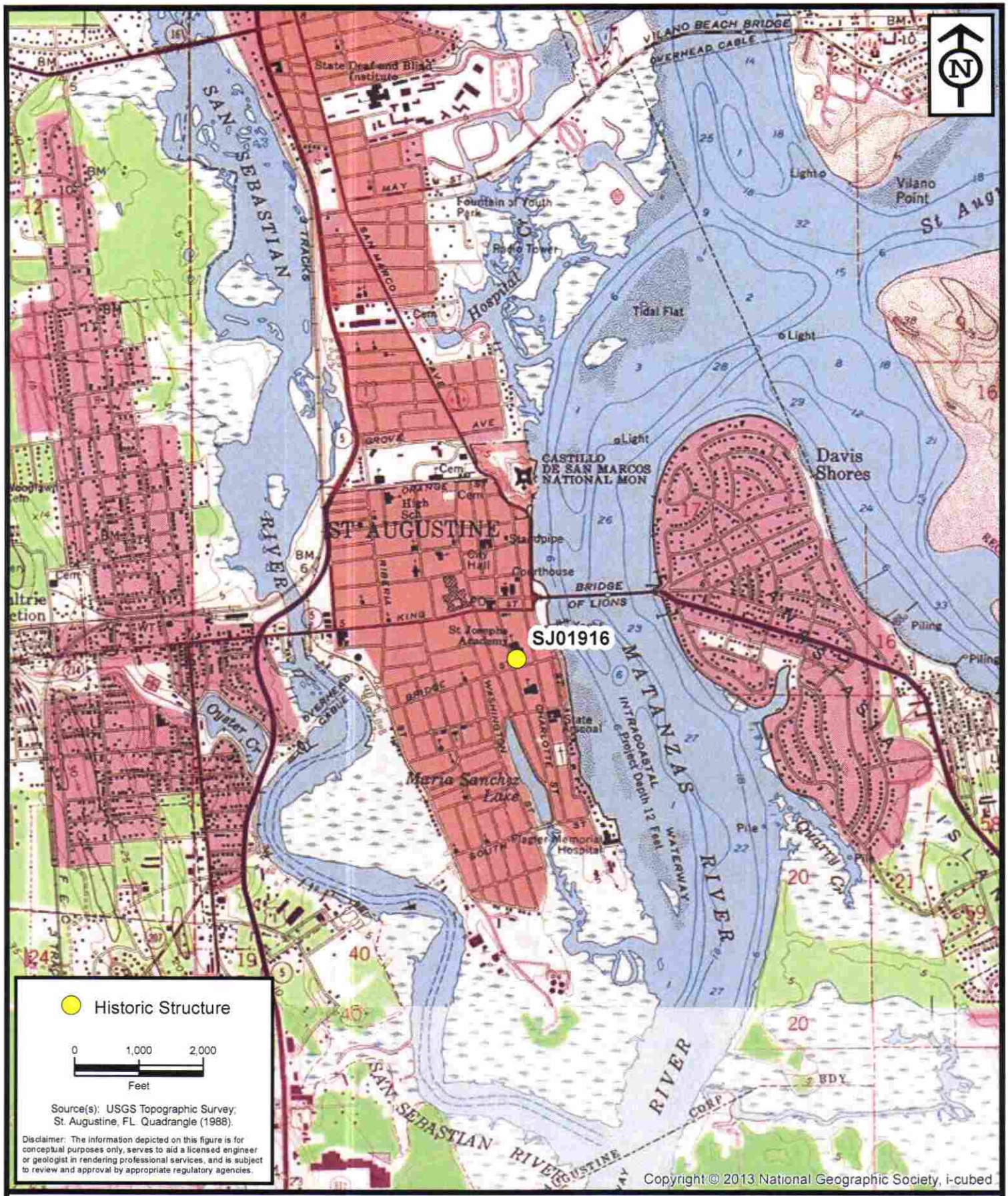

ENVIRONMENTAL SERVICES, INC.
7220 Financial Way, Suite 100
Jacksonville, Florida 32256
(904) 470-2200
(904) 470-2112 Fax
www.environmentalservicesinc.com

Project Location - SJ01916

City of St. Augustine
Historic Structure Survey

St. Johns County, Florida

Project:	AJ15441.00
Date:	May 2016
Drawn By:	AVL
Checked By:	JRN
Approved By:	PD
Figure:	1

Path: P:\GIS_Projects\AJ\2015\441\00\fig\FMSF\SJ01916\Location.mxd Date: 1/29/2016 10:59:36 AM

SJ01916

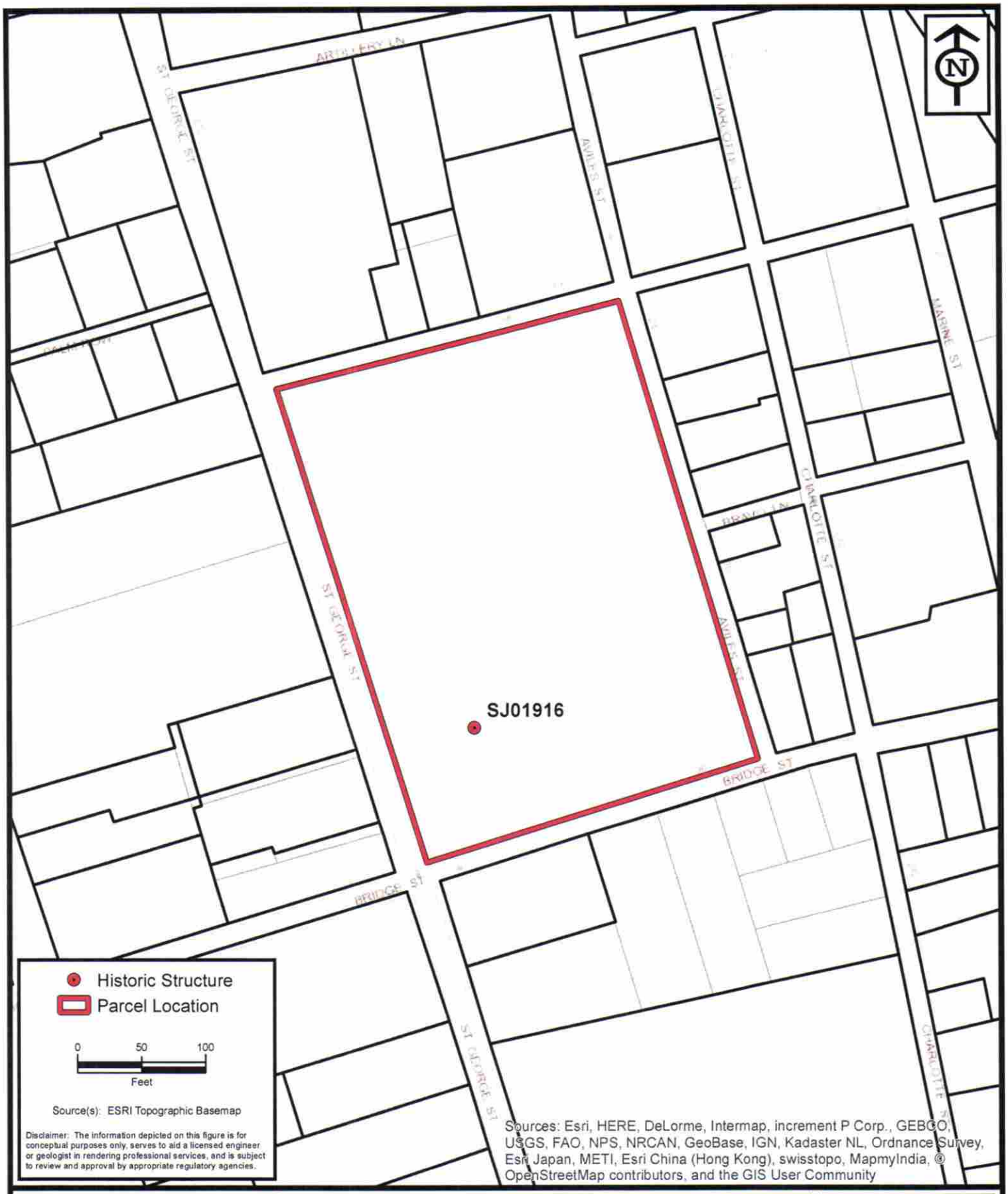

ENVIRONMENTAL SERVICES, INC.
7220 Financial Way, Suite 100
Jacksonville, Florida 32256
(904) 470-2200
(904) 470-2112 Fax
www.environmentalservicesinc.com

Parcel Location - SJ01916

City of St. Augustine
Historic Structure Survey

St. Johns County, Florida

Project:	AJ15441.00
Date:	May 2016
Drawn By:	AVL
Checked By:	JRN
Approved By:	PD
Figure:	2

Path: P:\GIS_Projects\AJ\2015\441\00\fig\FMSF\SJ01916\Parcel.mxd Date: 2/1/2016 11:38:37 AM

SJ01916

Staff Report pg. 70

MOTHERHOUSE
SISTERS OF
SAINT JOSEPH

J.M.J.
1874
MOTHERHOUSE
SISTERS OF
SAINT JOSEPH
211

LOURDES HALL
1994
SISTERS OF ST. JOSEPH

ST. JOSEPH ACADEMY
FOUNDED BY THE SISTERS
OF ST. JOSEPH
CHARTERED IN 1874
BY THE STATE OF FLORIDA
LOCATED ON THIS SITE
1874 - 1979

ST. JOSEPH ACADEMY
FOUNDED BY THE SISTERS
OF ST. JOSEPH
CHARTERED IN 1874
BY THE STATE OF FLORIDA
LOCATED ON THIS SITE
1874 - 1979
RELOCATED AS A DIOCESAN
HIGH SCHOOL IN 1979
ALUMNI, CLASSES OF
1952, '53, '54

CURTIS PEST CONTROL
(904) 827-1781
PESTICIDE APPLICATION
KEEP OFF
UNTIL DRY

†J.M.J.†
1874
MOTHERHOUSE
SISTERS OF
SAINT JOSEPH

J.M.J.
1874
MOTHERHOUSE
SISTERS OF
SAINT JOSEPH

SANBORN MAPS
241 St. George Street (Entire Block)

1888

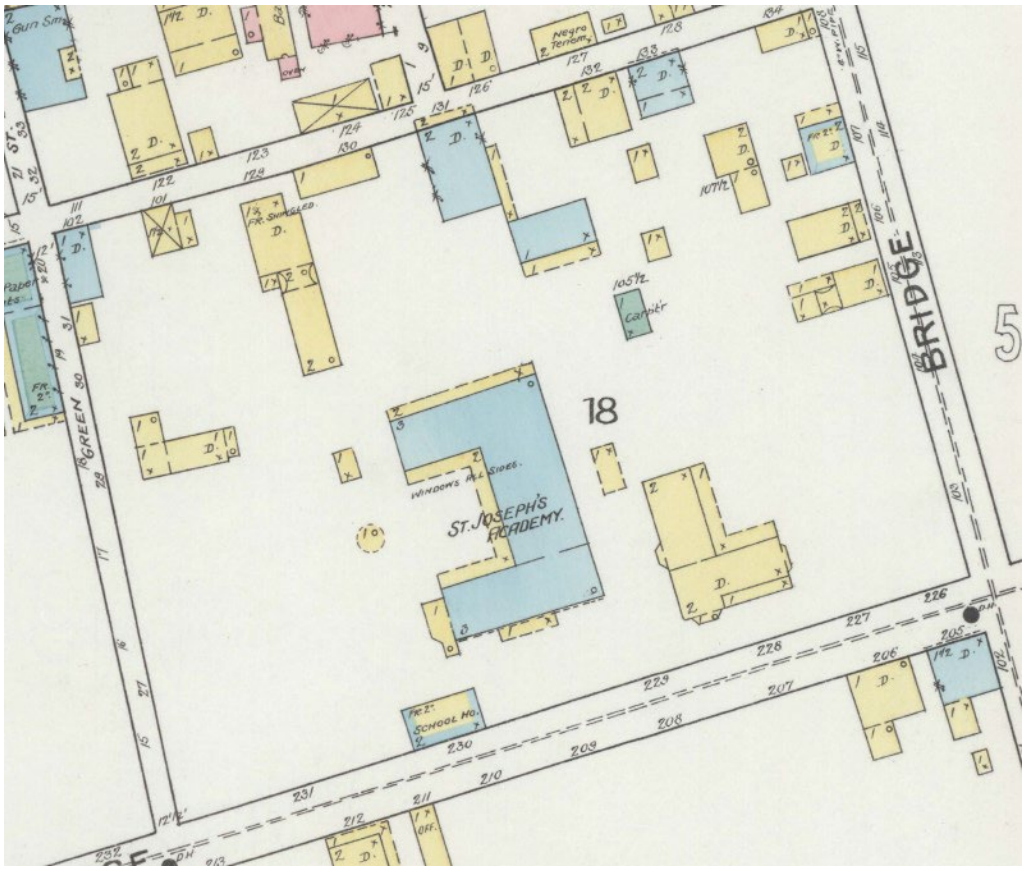

1893

SANBORN MAPS
241 St. George Street (Entire Block)

1899

1904

SANBORN MAPS
241 St. George Street (Entire Block)

1910

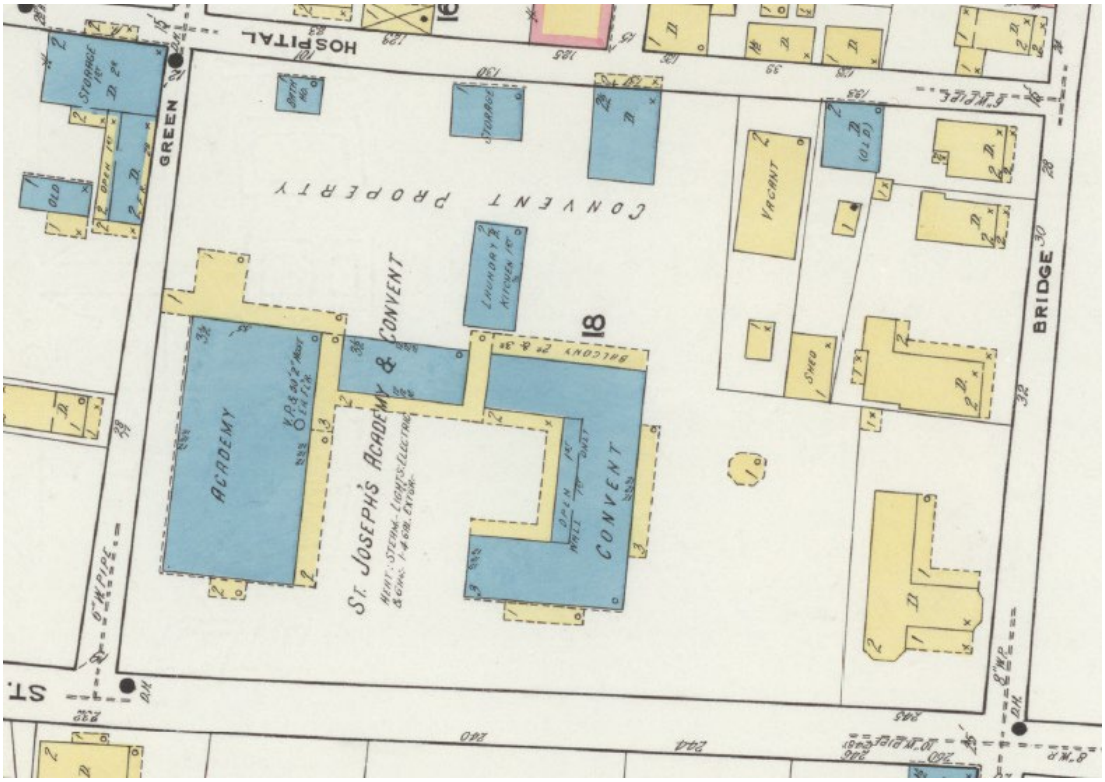

1917

SANBORN MAPS
241 St. George Street (Entire Block)

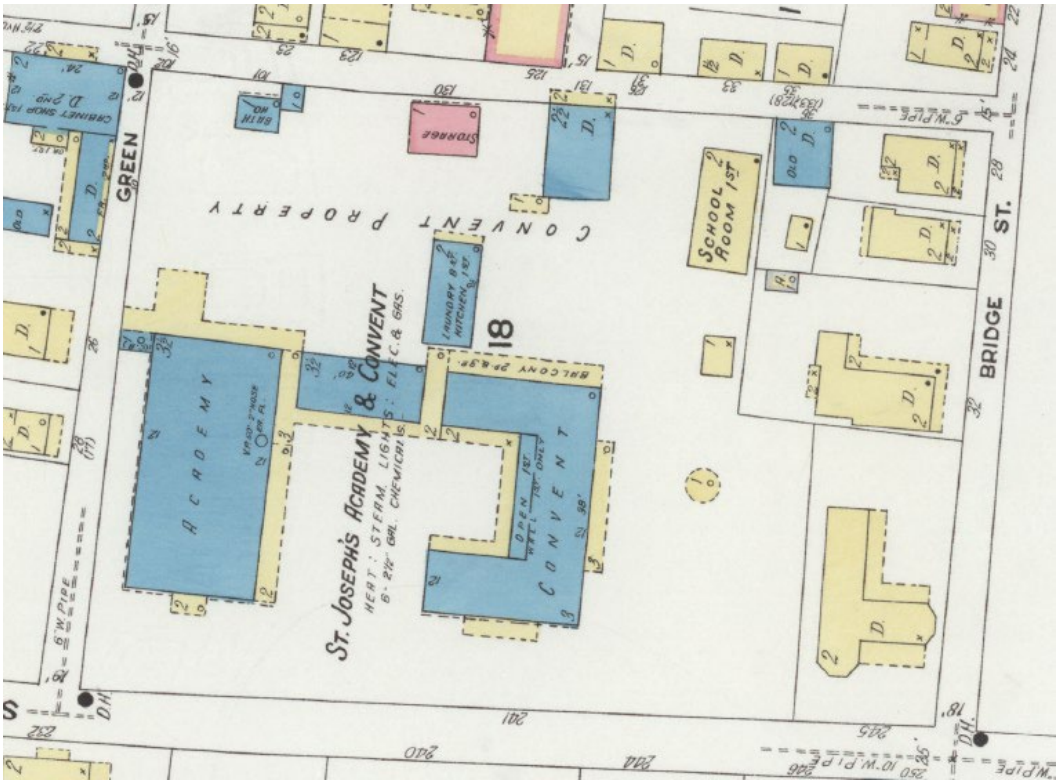

1924

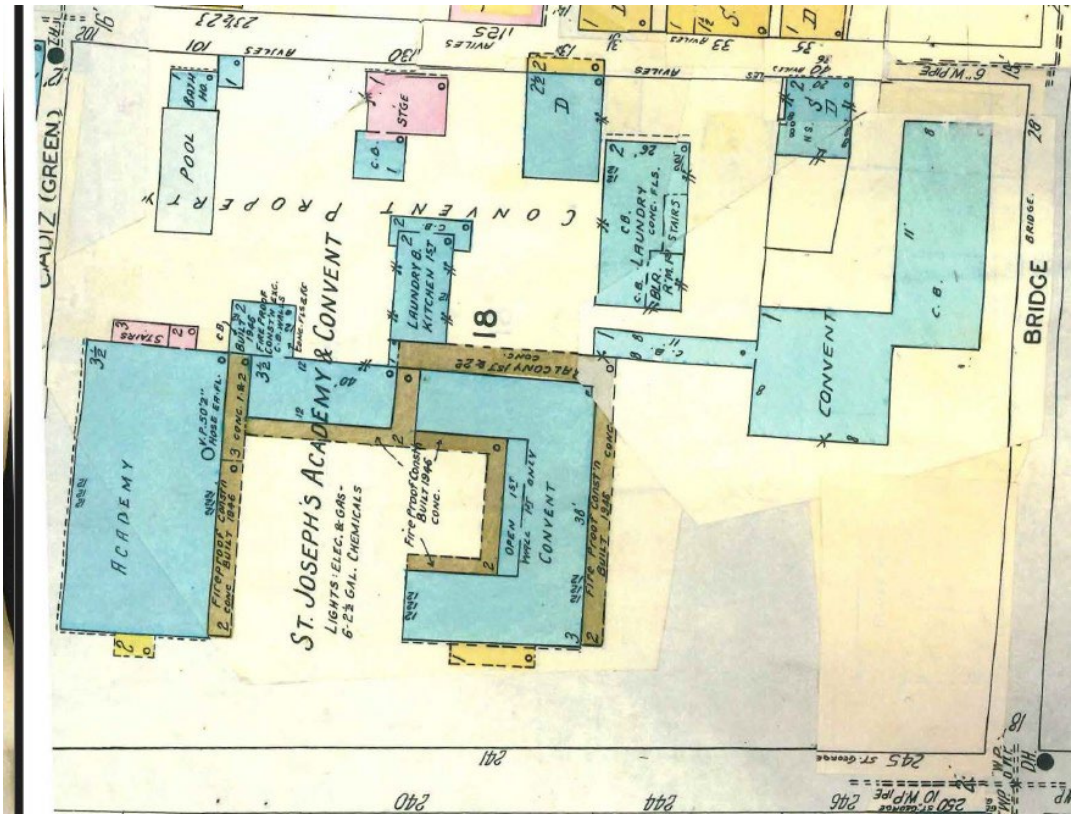

1930 updated to 1960

CITY OF ST. AUGUSTINE
HISTORIC ARCHITECTURAL REVIEW BOARD APPLICATION

Opinion of Appropriateness

Case Number: HP2025-0052 **Meeting Date: Tuesday, July 15, 2025**

1. NAME OF APPLICANT: Matthews | DCCM
   Business (if applicable):
   Address: 7 Waldo Street
   City: St Augustine State: FL Zip Code: 32084
   Daytime Telephone: 9048261334 E-Mail Address: MDG.planning@dccm.com

2. NAME OF PROPERTY OWNER: Sisters of St Joseph, Inc.
   Business (if applicable):
   Address: 241 Saint George Street
   City: St Augustine State: FL Zip Code: 32085
   Daytime Telephone: 9048261334 E-Mail Address: MDG.planning@dccm.com

3. PROJECT LOCATION: 241 SAINT GEORGE ST, Saint Augustine, FL, 32084

4. LEGAL DESCRIPTION: CITY OF ST AUGUSTINE ALL BLK 35

5. SCOPE OF WORK: to construct a new institutional building on the northern portion of the property with associated alterations and repairs to existing masonry perimeter walls and new hardscape and landscape designs.

Information attached by applicant includes:

- Application Agreement
- Owner Authorization
- Coversheet
- Property Appraiser
- Sunbiz
- Legal Description
- Summary Statement
- Site Plan
- Architectural Plans
- Landscape Plan
- Existing/Historic Photographs

Received June 13, 2025
Planning and Building Department

HARB APPLICATION AGREEMENT

In filling out this application:

- **I understand that it becomes part of the Public Record of the City of St. Augustine and hereby certify that all information contained herein is accurate to the best of my knowledge.**
- **I further understand that if this application is for an *Opinion of Appropriateness*, I must still obtain a *Certificate of Appropriateness* before applicable permits can be issued for project work to begin. If this application is for a *Certificate of Appropriateness, Demolition*, or *Partial Demolition*, and it is approved, I am required to obtain other development approvals, archaeological review, and a building permit as necessary prior to starting project work.**
- **Once a hearing date has been set and a legal notice has been published or posted, I, or an authorized representative, must be prepared to present the request at the scheduled hearing date. The cost of subsequent hearings requiring re-noticing due to continuance will be assessed to the applicant.**
- **I have been made aware that applications must be sufficiently complete at the time of submittal or may be delayed to a future meeting. Relevant information necessary for application review shall include but not be limited to the items referenced in the "Plan Requirements" section of the Architectural Guidelines for Historic Preservation (AGHP) depending on the scope and scale of the project. The minimum application requirements are marked as required submittal documents in this online application. Contact Planning Staff if the project is unique and needs to be addressed in a different manner. Minor details may be submitted in the portal up to 10 days before the meeting and HARB will determine if additional materials may be presented at the meeting.**

All applicants/owners of record must sign the application agreement. If the property applicant/owner is a governmental agency; licensed business or company; incorporated organization; or an administered estate, an authorized agent may sign. If the applicant is different than the property owner, the application must be signed by both parties. An Authorization Form signed by the property owner(s) and notarized, must be submitted only in the absence of the property owner's signature or where an authorized agent signs in lieu of the property owner.

Project Address: 241 St George Street

Applicant's Name: Autumn Martinage Applicant's Signature: _____

Owner's Name: Sisters of St Joseph, Inc. Owner's Signature: _____

Owner's Name: _____ Owner's Signature: _____

Owner's Name: _____ Owner's Signature: _____

(Can add additional signature page if needed)

Florida Statute 286.0105 states that a person appealing any decision by this board at any meeting regarding this application may need a verbatim record of the proceedings which includes testimony and evidence upon which the appeal is to be based.

Received June 13, 2025
Planning and Building Department

CITY OF ST AUGUSTINE
ESTD. 1565

Owner's Authorization For Agent

Matthews | DCCM is/are hereby authorized TO ACT ON BEHALF OF Sisters of St Joseph, Inc., the owner(s) of those lands described within ☒ the attached application, or ☐ described within the previously filed Application number:_____, and as described in the attached deed or other such proof of ownership as may be required, in applying to the City of St. Augustine's Historic Architectural Review Board, for an application related to the structure located at: 241 St George Street

BY: Sister Kathleen Carr, SSJ
Signature of Owner

Sister Kathleen Carr, SSJ
Print Name of Owner

904-824-1752
Telephone Number

State of Florida

County of St Johns

Signed and sworn before me on this 3 day of June, 2025

By Sr. Kathleen Carr

Identification verified:

Oath sworn: ✓ Yes____ No

Notary Signature: Lydia Boschert

My Commission expires: 9/28/2028

NOTARY PUBLIC STATE OF FLORIDA
LYDIA DENA BOSCHERT
MY COMMISSION # HH 532358
EXPIRES: September 28, 2028

Rev:120219 jw

Received June 13, 2025
Planning and Building Department

Matthews | DCCM
Engineering - Landscape Architecture - Surveying

Sisters of St Joseph Motherhouse Expansion
Opinion of Appropriateness

Submittal Date
6/13/2025

Applicant/Property Owner
Sisters of St Joseph
PO Box 3506
St. Augustine, FL 32085

Agent
Matthews | DCCM
7 Waldo Street
St. Augustine, FL 32084
904-826-1334
MDG.Planning@dccm.com

Application Packet

Submittal Items
1. Proof of Ownership
2. Owner's Authorization Form
3. Legal Description
4. Summary Statement
5. Site Plan
6. Floorplans, Elevations and Renderings
7. Preliminary Landscape Plan
8. Photos

Parcel ID/Address
199290-0000
241 St George St, St Augustine

Received June 13, 2025
Planning and Building Department

St. Johns County, FL

Apply for Exemptions

Apply for Exemptions

2024 TRIM Notice

2024 TRIM Notice (PDF)

Summary

Parcel ID	1992900000
Location Address	32 AVILES ST 34 AVILES ST 36 AVILES ST 241 ST GEORGE ST 243 ST GEORGE ST SAINT AUGUSTINE 32084-0000
Neighborhood	City St Aug S of Plaza (COM) (610.03)
Tax Description*	CITY OF ST AUGUSTINE ALL BLK 35 *The Description above is not to be used on legal documents.
Property Use Code	Non-Profit, Charitable & Orphanages (7500)
Subdivision	City of St Augustine
Sec/Twp/Rng	18-7-30
District	City of St Augustine (District 452)
Millage Rate	18.72
Acreage	2.410
Homestead	N

Click Here to Open Cyclomedia Viewer in a New Tab

Owner Information

Owner Name	Sisters Of St Joseph 100%
Mailing Address	PO BOX 3506 SAINT AUGUSTINE, FL 32085-3506

Exemption Information

Exemption Type	Status	Amount
Church/Religious		$7,336,468

Map

Received June 13, 2025
Planning and Building Department

Valuation Information

	2025
Building Value	$5,105,819
Extra Features Value	$130,649
Total Land Value	$2,100,000
Agricultural (Assessed) Value	$0
Agricultural (Market) Value	$0
Just (Market) Value	**$7,336,468**
Total Deferred	$0
Assessed Value	**$7,336,468**
Total Exemptions	$7,336,468
Taxable Value	**$0**

Values listed are from our working tax roll and are subject to change.

Historical Assessment Information

Year	Building Value	Extra Feature Value	Total Land Value	Ag (Market) Value	Ag (Assessed) Value	Just (Market) Value	Assessed Value	Exempt Value	Taxable Value
2024	$5,254,458	$137,181	$2,100,000	$0	$0	$7,491,639	$6,942,353	$7,491,639	$0
2023	$5,296,760	$143,832	$1,155,000	$0	$0	$6,595,592	$6,311,230	$6,595,592	$0
2022	$4,495,056	$95,425	$1,155,000	$0	$0	$5,745,481	$5,745,481	$5,745,481	$0
2021	$4,582,392	$95,425	$1,155,000	$0	$0	$5,832,817	$5,832,817	$5,832,817	$0
2020	$4,669,728	$95,425	$1,155,000	$0	$0	$5,920,153	$5,419,884	$5,920,153	$0
2019	$3,660,170	$111,997	$1,155,000	$0	$0	$4,927,167	$4,927,167	$4,927,167	$0
2018	$2,898,736	$111,997	$2,100,000	$0	$0	$5,110,733	$4,917,763	$5,110,733	$0
2017	$2,972,012	$107,787	$2,100,000	$0	$0	$5,179,799	$4,470,694	$5,179,799	$0
2016	$3,024,921	$107,524	$1,375,500	$0	$0	$4,507,945	$4,064,267	$4,507,945	$0
2015	$3,075,453	$131,148	$1,375,500	$0	$0	$4,582,101	$3,694,788	$4,582,101	$0
2014	$1,849,421	$133,977	$1,375,500	$0	$0	$3,358,898	$3,358,898	$3,358,898	$0

Building Information

Building	1	**Roof Cover**	Modular Metal
Building Value	$2,799,554	**Roof Structure**	Wood Truss
Year Built	1866	**Interior Flooring**	Hardwood
Actual Area	38338	**Interior Wall**	Drywall
Conditioned Area	20366	**Heating Type**	Air Duct
Use	Dormitories	**Air Conditioning**	Central
Style	03	**Bedrooms**	0
Exterior Wall	Concrete Stucco	**Baths**	

Description	Square Footage
BASE AREA	3008
OUTSIDE STAIRS	515
FINISHED UPPER STORY	5542
BASE AREA	11816
UNFINISHED BASEMENT	7269
FINISHED OPEN PORCH	10188
Total SqFt	38338

Building	2	**Roof Cover**	Modular Metal
Building Value	$254,414	**Roof Structure**	Wood Truss
Year Built	1691	**Interior Flooring**	Concrete Finish, Pine Wood
Actual Area	3322	**Interior Wall**	Plaster
Conditioned Area	3218	**Heating Type**	None
Use	Tourist Attraction	**Air Conditioning**	None
Style	04	**Bedrooms**	0
Exterior Wall	Stone	**Baths**	5

Description	Square Footage
BASE AREA	3218
FINISHED CANOPY	104
Total SqFt	3322

Building	3	**Roof Cover**	Modular Metal
Building Value	$432,602	**Roof Structure**	Wood Truss
Year Built	1940	**Interior Flooring**	Concrete Finish, Hardwood
Actual Area	4192	**Interior Wall**	Drywall
Conditioned Area	4192	**Heating Type**	Air Duct

Received June 13, 2025
Planning and Building Department

Use	Libraries	**Air Conditioning**	Central
Style	04	**Bedrooms**	0
Exterior Wall	Concrete Stucco	**Baths**	8

Description	Square Footage
BASE AREA	4080
ADDITION	112
Total SqFt	4192

Building	4	**Roof Cover**	Composite Shingle
Building Value	$247,611	**Roof Structure**	Wood Truss
Year Built	1750	**Interior Flooring**	Pine Wood, Sheet Vinyl
Actual Area	2824	**Interior Wall**	Plaster
Conditioned Area	2796	**Heating Type**	Air Duct
Use	Dormitories	**Air Conditioning**	Central
Style	03	**Bedrooms**	0
Exterior Wall	Stucco	**Baths**	

Description	Square Footage
BASE AREA	1398
FINISHED UPPER STORY	1398
UNFINISHED CANOPY	28
Total SqFt	2824

Building	5	**Roof Cover**	Modular Metal
Building Value	$1,371,638	**Roof Structure**	Wood Truss
Year Built	1961	**Interior Flooring**	Carpet, Vinyl Tile
Actual Area	14597	**Interior Wall**	Drywall
Conditioned Area	12822	**Heating Type**	Air Duct
Use	Dormitories	**Air Conditioning**	Central
Style	03	**Bedrooms**	0
Exterior Wall	Concrete Stucco	**Baths**	

Description	Square Footage
ADDITION	456
BASE AREA	7739
BASE AREA	4627
FINISHED OPEN PORCH	1775
Total SqFt	14597

Sketch Information

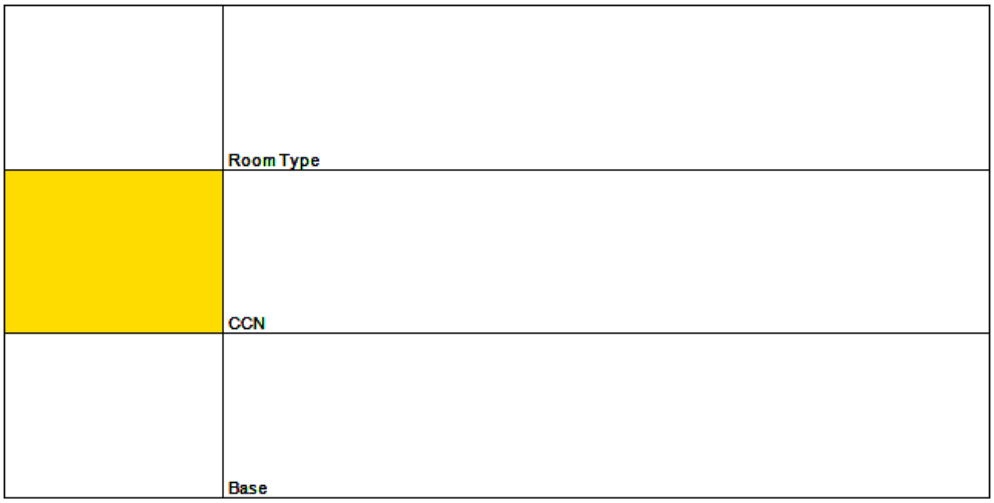

Received June 13, 2025
Planning and Building Department

	Room Type
	CANOPY
	FINISHED UPPER STORY
	Base

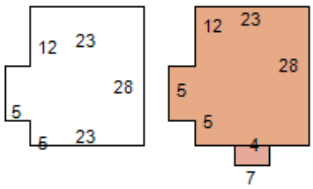

	Room Type
	FINISHED OPEN PORCH
	UNFINISHED BASEMENT
	FINISHED UPPER STORY
	OST
	Base

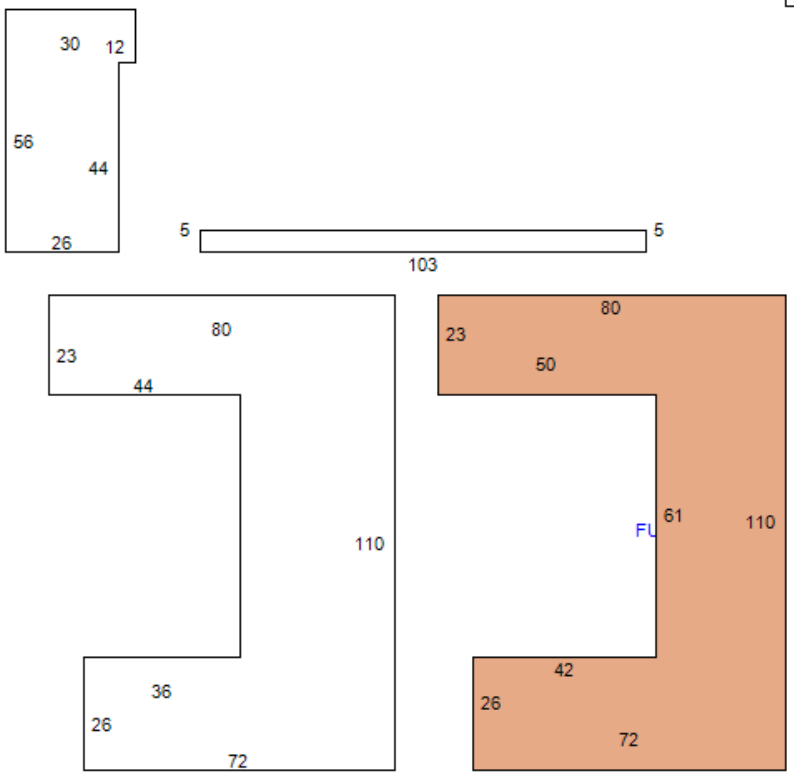

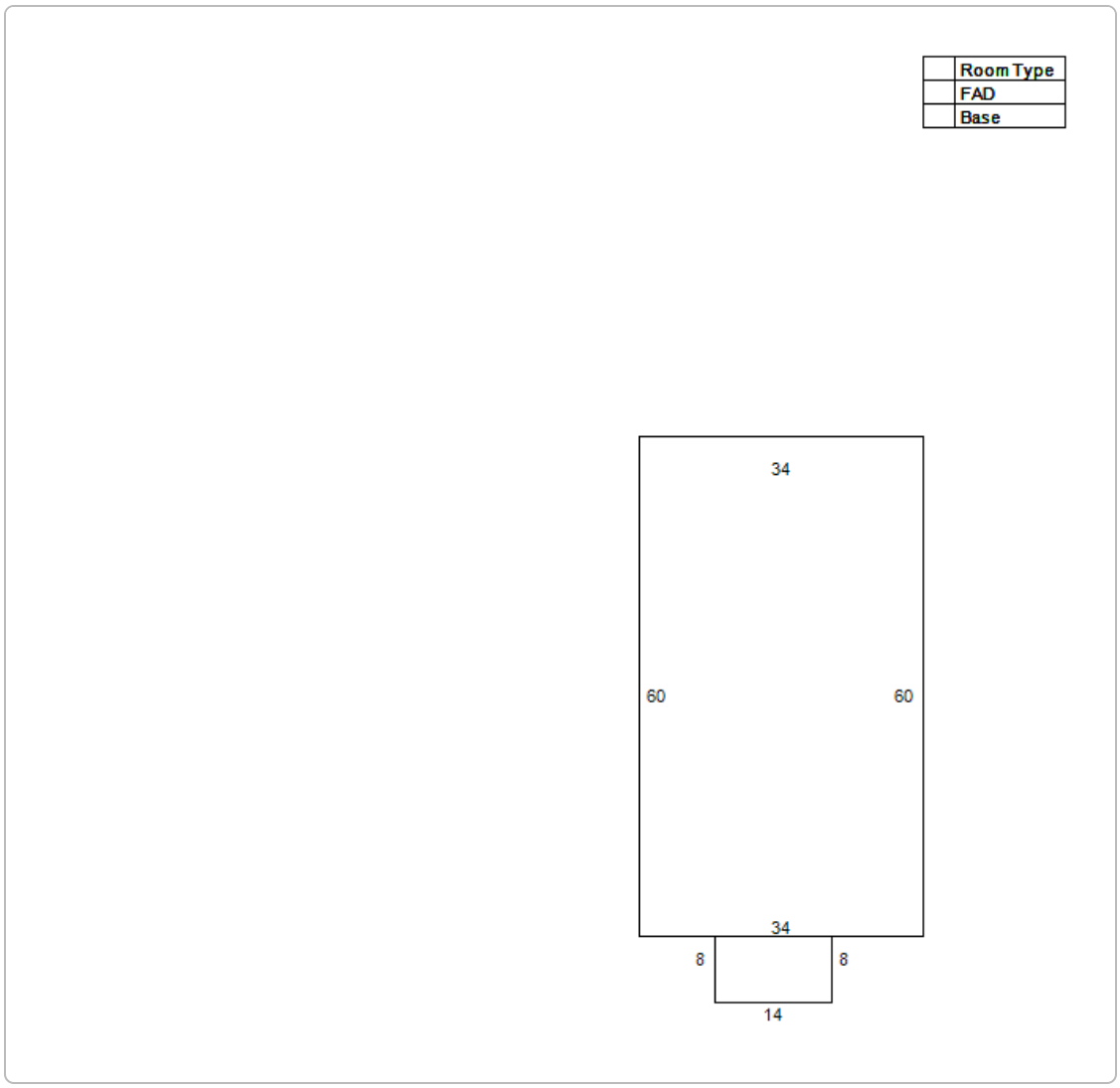

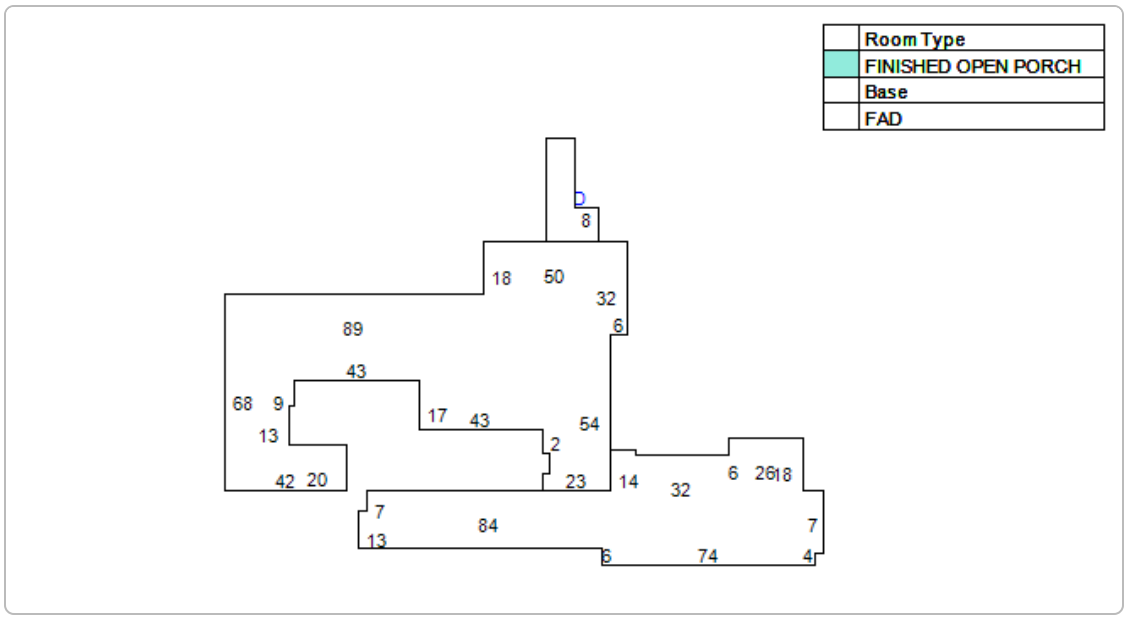

Extra Feature Information

Code Description	Status	Value
Garage - Excellent (Mix)		18563
Masonry Wall (Mix)		12150

Received June 13, 2025
Planning and Building Department

Code Description	Status	Value
Pool - Good (RES)		36400
Handicap Ramp (COM)		1793
Brick Pavers (COM)		518
Masonry Wall (Mix)		306
Handicap Ramp (COM)		1304
Handicap Ramp (COM)		3566
Masonry Wall (Mix)		198
Concrete Paving - Under 8" (COM)		1795
Brick Pavers (COM)		250
Concrete Paving - Under 8" (COM)		1154
Concrete Paving - Under 8" (COM)		4763
Curb (COM)		650
Screen Enclosure - Good (Mix)		14790
Brick Pavers (COM)		32449

Land Information

Use Description	Front	Depth	Total Land Units	Unit Type	Land Value
Non-Profit, Charitable & Orphanages	750	140	105000	SF	$2,100,000

No data available for the following modules: Sales Questionnaire Form, Sale Information.

The St. Johns County Property Appraiser's Office makes every effort to produce the most accurate information possible. No warranties, expressed or implied, are provided for the data herein, its use or interpretation.
| User Privacy Policy | GDPR Privacy Notice
Last Data Upload: 12/17/2024, 9:51:13 AM

Contact Us

Developed by
SCHNEIDER GEOSPATIAL

Received June 13, 2025
Planning and Building Department

Detail by Entity Name

Florida Not For Profit Corporation
SISTERS OF ST. JOSEPH, INC.

Filing Information

Document Number	711656
FEI/EIN Number	59-6016039
Date Filed	10/19/1966
State	FL
Status	ACTIVE
Last Event	AMENDMENT
Event Date Filed	03/05/1987
Event Effective Date	NONE

Principal Address

241 ST GEORGE STREET
ST AUGUSTINE, FL 32084

Changed: 02/12/2009

Mailing Address

P.O. BOX 3506
ST AUGUSTINE, FL 32085

Changed: 01/03/2012

Registered Agent Name & Address

Flynn, Stephanie
241 ST GEORGE ST
ST AUGUSTINE, FL 32084

Name Changed: 02/02/2021

Address Changed: 09/13/2018

Officer/Director Detail

Name & Address

Title PD

Received June 13, 2025
Planning and Building Department

CARR, KATHLEEN
P.O. BOX 3506
ST. AUGUSTINE, FL 32085

Title Director

Stoecker, Jane
241 ST GEORGE ST
ST AUGUSTINE, FL 32084

Title Secretary

FOSTER, SUZAN
241 ST GEORGE ST
JACKSONVILLE, FL 32084

Title Treasurer

FLYNN, STEPHANIE
P.O. BOX 3506
SAINT AUGUSTINE, FL 32085

Title Director

Tucker, Carolyn
241 St George St
St Augustine, FL 32084

Annual Reports

Report Year	Filed Date
2023	01/27/2023
2023	08/29/2023
2024	02/02/2024

Document Images

02/02/2024 -- ANNUAL REPORT	View image in PDF format
08/29/2023 -- AMENDED ANNUAL REPORT	View image in PDF format
01/27/2023 -- ANNUAL REPORT	View image in PDF format
01/24/2022 -- ANNUAL REPORT	View image in PDF format
02/02/2021 -- ANNUAL REPORT	View image in PDF format
03/23/2020 -- ANNUAL REPORT	View image in PDF format
02/26/2019 -- ANNUAL REPORT	View image in PDF format
09/13/2018 -- AMENDED ANNUAL REPORT	View image in PDF format
01/26/2018 -- ANNUAL REPORT	View image in PDF format
01/09/2017 -- ANNUAL REPORT	View image in PDF format
01/25/2016 -- ANNUAL REPORT	View image in PDF format
01/13/2015 -- ANNUAL REPORT	View image in PDF format
01/07/2014 -- ANNUAL REPORT	View image in PDF format
01/22/2013 -- ANNUAL REPORT	View image in PDF format

Received June 13, 2025
Planning and Building Department

01/03/2012 -- ANNUAL REPORT	View image in PDF format
01/05/2011 -- ANNUAL REPORT	View image in PDF format
09/23/2010 -- ANNUAL REPORT	View image in PDF format
01/12/2010 -- ANNUAL REPORT	View image in PDF format
02/12/2009 -- ANNUAL REPORT	View image in PDF format
02/08/2008 -- ANNUAL REPORT	View image in PDF format
01/29/2007 -- ANNUAL REPORT	View image in PDF format
01/25/2006 -- ANNUAL REPORT	View image in PDF format
01/14/2005 -- ANNUAL REPORT	View image in PDF format
01/23/2004 -- ANNUAL REPORT	View image in PDF format
01/14/2003 -- ANNUAL REPORT	View image in PDF format
01/14/2002 -- ANNUAL REPORT	View image in PDF format
01/09/2001 -- ANNUAL REPORT	View image in PDF format
01/19/2000 -- ANNUAL REPORT	View image in PDF format
02/22/1999 -- ANNUAL REPORT	View image in PDF format
02/11/1998 -- ANNUAL REPORT	View image in PDF format
01/30/1997 -- ANNUAL REPORT	View image in PDF format
02/14/1996 -- ANNUAL REPORT	View image in PDF format
01/30/1995 -- ANNUAL REPORT	View image in PDF format

Florida Department of State, Division of Corporations

Received June 13, 2025
Planning and Building Department

EXHIBIT A
LEGAL DESCRIPTION

ALL OF BLOCK 35 OF THE CITY OF ST AUGUSTINE, ST JOHNS COUNTY, FLORIDA.

PARCEL ID # 199290-0000

Received June 13, 2025
Planning and Building Department

Sisters of St Joseph Expansion
Opinion of Appropriateness

Summary Statement

The construction of a new motherhouse to be located in the northern third of the subject property and area that is presently vacant with the exception of an existing swimming pool.

New Construction:

The proposed new motherhouse will have a building footprint of 13,058 square feet and is proposed to be three stories in height (47' 9"). The total square footage is 35,070. The motherhouse will be accessed by St George Street through an existing access point that was previously used for the St Joseph Academy. This access point will feature a circulation drive, a porte cochere, and three parking spaces.

The new motherhouse will be designed to compliment the existing historic motherhouse and will include a stucco facade, metal standing seam roof, wood casement style windows and a combination of full-light and panel style entry doors.

Coquina Walls:

The historic coquina block walls along Aviles Street will be repaired as part of this proposed project. The existing wall is presently leaning out towards Aviles Street creating a safety hazard. A structural engineer will be engaged to assist with developing a plan that will allow for adequate repairs to the wall while maintaining its historic character and preservation of existing materials.

An existing access point along Cadiz Street is currently enclosed with a wood privacy fence. This enclosed access point will be updated to include a new access gate.

The existing access point along St George Street that was part of the former St Joseph Academy entrance will be carefully altered to allow safe vehicular access to this area of the property. This entrance has been previously altered as part of the evolution former school site. A structural engineer will be engaged to assist with any necessary deconstruction and reconstruction of this access point to maintain its existing design and characteristics.

Variance:

A variance request will be applied for prior to a submitted Certificate of Appropriateness (COA) to request relief from the following LDC requirements:

- Sec 28-188(c)(2) maximum lot coverage by all buildings and impervious surfaces;
- Sec 28-188(c)(3) maximum and minimum yard requirements; and
- Sec 28-188(c)(4) maximum height of structures.

Received July 1, 2025
Planning and Building Department

Matthews | DCCM
Engineering - Landscape Architecture - Surveying

July 1, 2025

Candice Seymor, Historic Preservation Planner
City of St. Augustine
Planning and Building Department
75 King Street
St. Augustine, FL 32084

Re: SSJ Motherhouse Expansion
Opinion of Appropriateness - HP2025-0052
Responses to Comments from OOA Submittal 1
Project No.: 24277.00

Dear Candice:

On behalf of our client, the Sister of St. Joseph, please find a list of the comments provided to us by your letter dated June 24, 2025, followed by responses by Matthews | DCCM with the following supplemental materials enclosed for your review.

- Revised Site Plan
- Revised Floorplans, Elevations and Renderings
- Revised Landscape Plan

EXTERIOR DOORS

1. For new openings, a scaled wall section will be required for COA.

Matthews | DCCM: Please see revised Floorplans, Elevations and Renderings.

2. Brochure, sample, or scaled drawing of proposed door(s) including material, all dimensions, finish, glazing, and hardware will be required for COA.

Matthews | DCCM: Please see revised Floorplans, Elevations and Renderings. This information has been labeled on Page 10. Entry doors are wood panels. Service doors are hollow metal. Door hardware is oil rubbed bronze.

WINDOWS

3. For new openings, a scaled wall section with proposed window will be required for COA.

Matthews | DCCM: Please see revised Floorplans, Elevations and Renderings.

4. Brochure or sample showing the material, window type, all dimensions and profiles, finish, glazing, and hardware will be required for COA.

Matthews | DCCM: Please see revised Floorplans, Elevations and Renderings. This information has been labeled on Page 10. Windows are wood clad arched casement approximately 6' by 5'.

EXTERIOR ELECTRICAL/MECHANICAL

Received July 1, 2025
Planning and Building Department

5. Brochure, sample, or scaled drawing showing the materials, light intensity and source, hardware, colors/finish. For COA, lighting fixtures and other visible electrical equipment should be detailed.

Matthews | DCCM: Will comply for COA submittal.

6. For new equipment, scaled drawing showing proposed project with context site and/or building. HVAC and other mechanical equipment must be located out of site or appropriately screened from rights-of-way. Drawings will need to confirm mechanical equipment locations, sight-lines, and screening if applicable.

Matthews | DCCM: Mechanical Equipment is located on the roof and screened by the pitched roof. Please see revised Floorplans, Elevations and Renderings. This information has been labeled on Pages 2 and 3.

FENCES/WALLS/GATES

7. More detailed plans for alterations and repairs to the masonry perimeter walls will be required for the COA.

Matthews | DCCM: Will comply for COA submittal.

PARKING, LANDSCAPE OR OTHER SITE FEATURES

8. Plant material list with identification, quantity, size at planting and maturity, spacing. A list of plant materials will be required with the COA application. Keep in mind, a list of pre-approved plants is provided as an appendix to the AGHP, and Florida Native plants are encouraged.

Matthews | DCCM: Please see revised Landscape Plan with an updated Planting Calculations and Schedule.

NEW CONSTRUCTION

9. Scaled landscape plan will be required for COA.

Matthews | DCCM: Please see revised Landscape Plan.

10. Refer to required details above for related roof, finishes, porches, doors, windows, foundation, electrical/mechanical.

Matthews | DCCM: Please see revised Floorplans, Elevations and Renderings. This information has been labeled on Page 10. There will be a standing seam metal roof, color to match the existing Motherhouse. In additional 3 coat stucco finish and trim banding, color to match the existing Motherhouse.

If you have any comments or questions, please do not hesitate to give me a call.

Sincerely,
Matthews | DCCM

Christina Evans, AICP
Senior Planner

Received June 13, 2025
Planning and Building Department

PRODUCT SPECIFICATIONS

See submitted architectural plans

Received July 1, 2025
Planning and Building Department

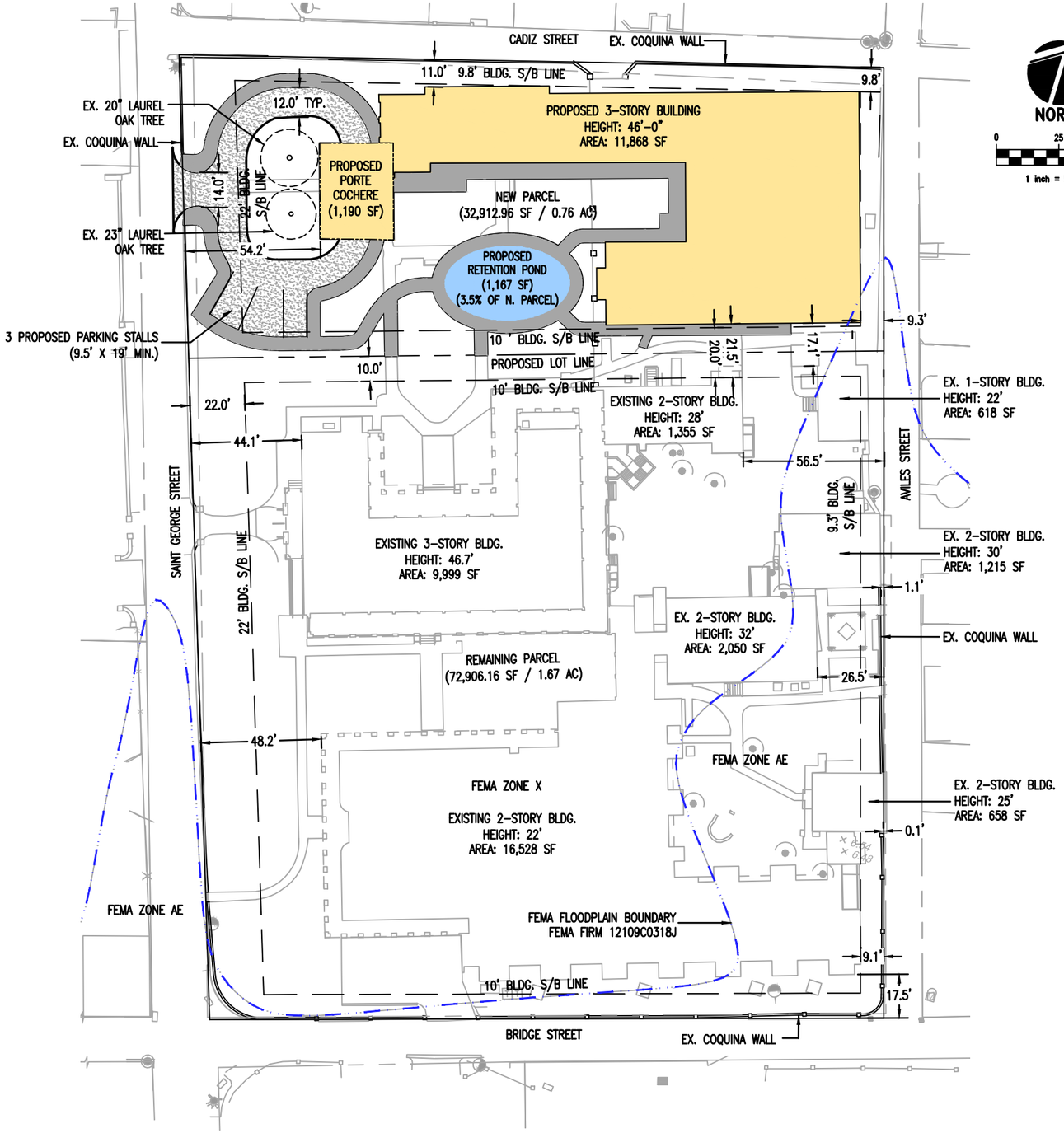

NEW PARCEL (NORTH)	
LAND USE:	HP
ZONING:	HP-1
ADDRESS:	241 ST. GEORGE ST.
PARCEL ID:	1992900000
TOTAL SITE AREA:	0.76 AC
MINIMUM LOT AREA:	1,750 SF
MINIMUM LOT WIDTH	35 FEET
PROPOSED LOT WIDTH	ST. GEORGE ST: 121.54 FEET CADIZ ST.: 282.16 FEET AVILES ST.: 113.47 FEET
EXISTING BUILDING:	1,551 SF
REMOVED BUILDING:	1,551 SF
ADDITIONAL BUILDING:	13,058 SF
TOTAL BUILDING:	13,058 SF
EXISTING IMPERVIOUS AREA:	5,384 SF
REMOVED IMPERVIOUS AREA:	5,384 SF
PROPOSED IMPERVIOUS AREA:	20,654.5 SF
TOTAL IMPERVIOUS AREA:	20,654.5 SF (62.4% OF PARCEL)
MAX. IMPERVIOUS AREA:	23,039 SF (70% OF PARCEL)
FLOOD ZONE:	X, AE
FEMA:	FIRM 12109C0318J
ARCHAEOLOGY ZONE:	IB
REQUIRED SETBACKS:	CADIZ ST. FRONTAGE: 8.4'-11.3' AVILES ST. FRONTAGE: 9.3'-12.5' ST. GEORGE ST. FRONTAGE: 22'-30' BRIDGE STREET: 10' LOT LINE: 10'
PROPOSED SETBACKS:	CADIZ ST. FRONTAGE: 9.8' AVILES ST. FRONTAGE: 9.3' ST. GEORGE ST. FRONTAGE: 54.2' BRIDGE STREET: N/A INTERIOR LOT LINE: 11.5'
PROPOSED BUILDING HEIGHT:	3 STORIES 47'-9"
MAX BUILDING HEIGHT:	2 1/2 STORIES 35 FT

REMAINING PARCEL (SOUTH)	
LAND USE:	HP
ZONING:	HP-1
ADDRESS:	241 ST. GEORGE ST.
PARCEL ID:	1992900000
TOTAL SITE AREA:	1.65 AC
MINIMUM LOT AREA:	1,750 SF
MINIMUM LOT WIDTH	35 FEET
PROPOSED LOT WIDTH	ST. GEORGE ST: 264.99 FEET BRIDGE ST.: 269.89 FEET AVILES ST.: 267.09 FEET
EXISTING BUILDING:	32,506 SF
REMOVED BUILDING:	83 SF
ADDITIONAL BUILDING:	0 SF
TOTAL BUILDING:	3,340 SF
EXISTING IMPERVIOUS AREA:	45,820 SF
REMOVED IMPERVIOUS AREA:	83 SF
PROPOSED IMPERVIOUS AREA:	0 SF
TOTAL IMPERVIOUS AREA:	45,737 SF (63.6% OF PARCEL)
MAX. IMPERVIOUS AREA:	144,366.64 SF (70% OF PARCEL)
FLOOD ZONE:	X, AE
FEMA:	FIRM 12109C0318J
ARCHAEOLOGY ZONE:	IB
REQUIRED SETBACKS:	CADIZ ST. FRONTAGE: 8.4'-11.3' AVILES ST. FRONTAGE: 9.3'-12.5' ST. GEORGE ST. FRONTAGE: 22'-30' BRIDGE STREET: 10' LOT LINE: 10'
SETBACKS:	CADIZ ST. FRONTAGE: N/A AVILES ST. FRONTAGE: 0.1' ST. GEORGE ST. FRONTAGE: 44.1' BRIDGE STREET: 17.5' INTERIOR LOT LINE: 5.6'
EXISTING BUILDING HEIGHT:	3 STORIES 41 FT
MAX BUILDING HEIGHT:	2 1/2 STORIES 35 FT

ENTIRE PARCEL	
LAND USE:	HP
ZONING:	HP-1
ADDRESS:	241 ST. GEORGE ST.
PARCEL ID:	1992900000
TOTAL SITE AREA:	2.41 AC
EXISTING BUILDING:	34,057 SF
REMOVED BUILDING:	1,634 SF
ADDITIONAL BUILDING:	13,058 SF
TOTAL BUILDING:	45,481 SF
EXISTING IMPERVIOUS AREA:	51,121 SF
REMOVED IMPERVIOUS AREA:	5,467 SF
ADDITIONAL IMPERVIOUS AREA:	66,391.5 SF
TOTAL IMPERVIOUS AREA:	66,475 SF (63.3% OF SITE)
MAX. IMPERVIOUS AREA:	73,485.72 (70% OF SITE)
PARCEL ID:	1992900000
FLOOD ZONE:	X, AE
FEMA:	FIRM 12109C0318J
ARCHAEOLOGY ZONE:	IB
REQUIRED SETBACKS:	CADIZ ST. FRONTAGE: 8.4'-11.3' AVILES ST. FRONTAGE: 9.3'-12.5' ST. GEORGE ST. FRONTAGE: 22'-30' BRIDGE STREET: 10'
PROPOSED SETBACKS:	CADIZ ST. FRONTAGE: 9.8' AVILES ST. FRONTAGE: 9.3' ST. GEORGE ST. FRONTAGE: 22' BRIDGE STREET: 10'
PROPOSED BUILDING HEIGHT:	3 STORIES 47'-9"
MAX BUILDING HEIGHT:	2 1/2 STORIES 35 FT

SISTERS OF ST. JOSEPH

NEW MOTHERHOUSE

SITE PLAN

010389.001

SCHEMMER
Design with Purpose. Build with Confidence.

Received July 1. 2025
Planning and Building Department

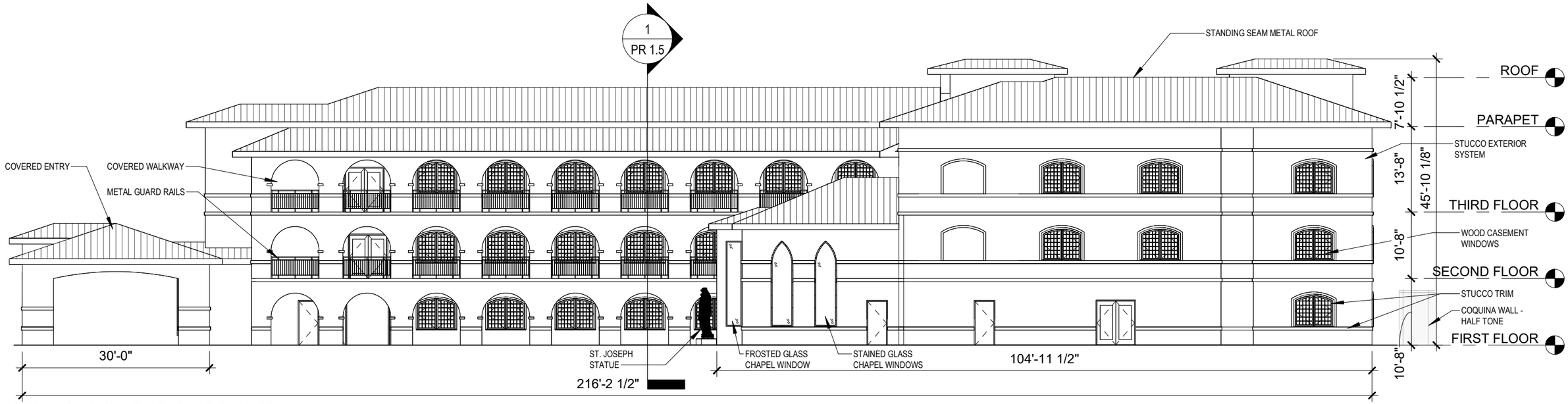

SOUTH ELEVATION (FACING EXISTING MOTHERHOUSE)

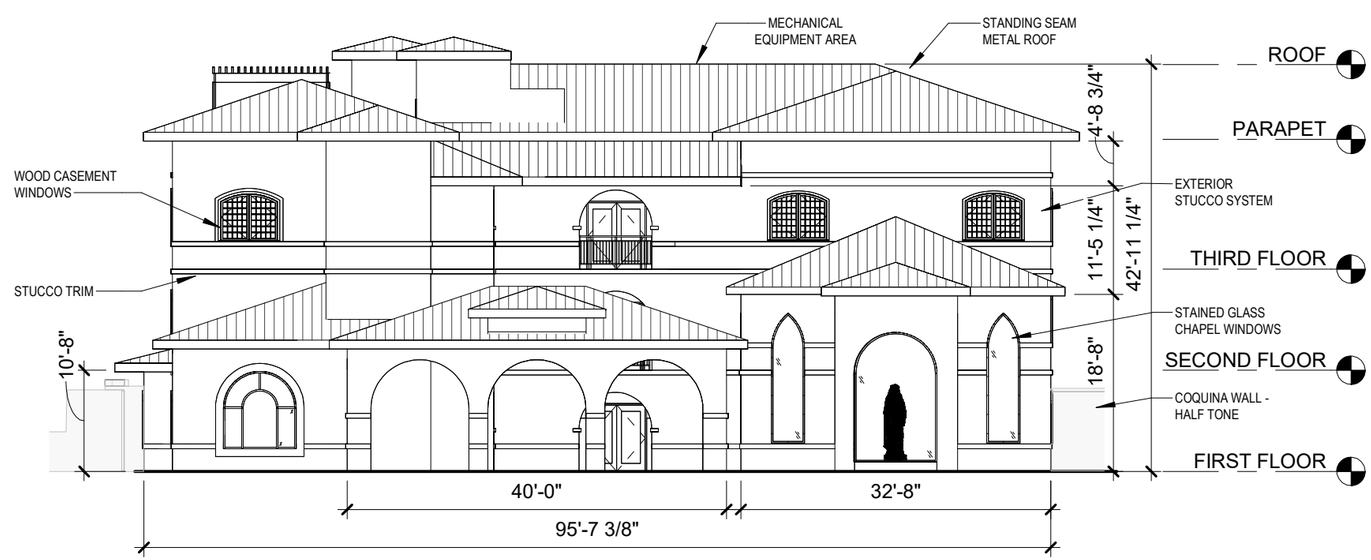

WEST ELEVATION (ST. GEORGE STREET)

SCALE: 1/16" = 1'-0"

0' 12' 24' 36'

SISTERS OF ST. JOSEPH

NEW MOTHERHOUSE

ELEVATIONS

010389.001

SCHEMMER

Design with Purpose. Build with Confidence.

Received July 1. 2025
Planning and Building Department

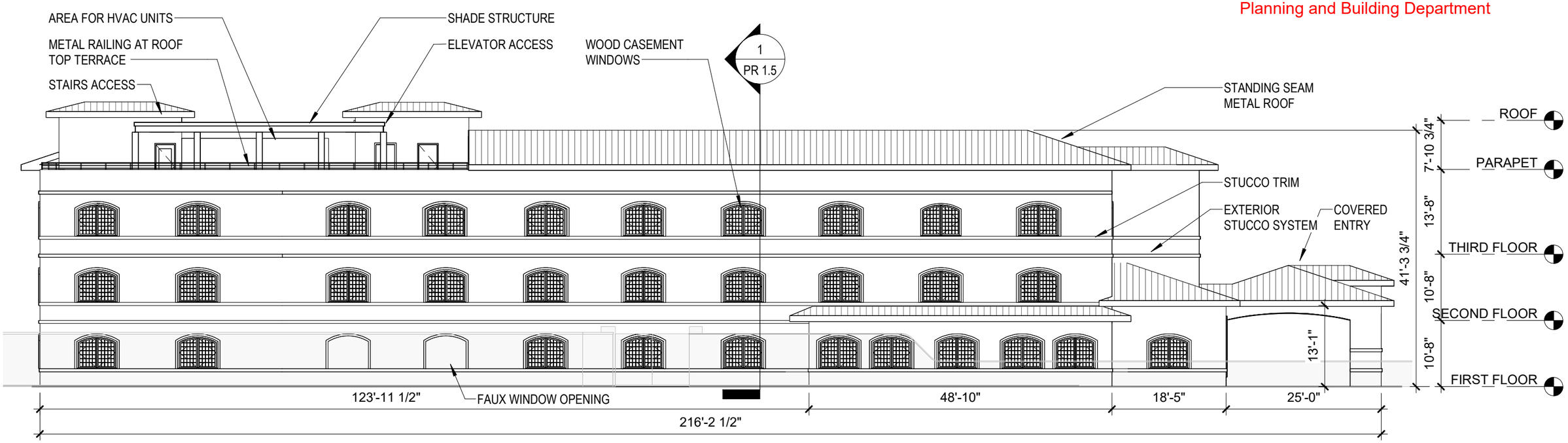

NORTH ELEVATION (CADIZ STREET)

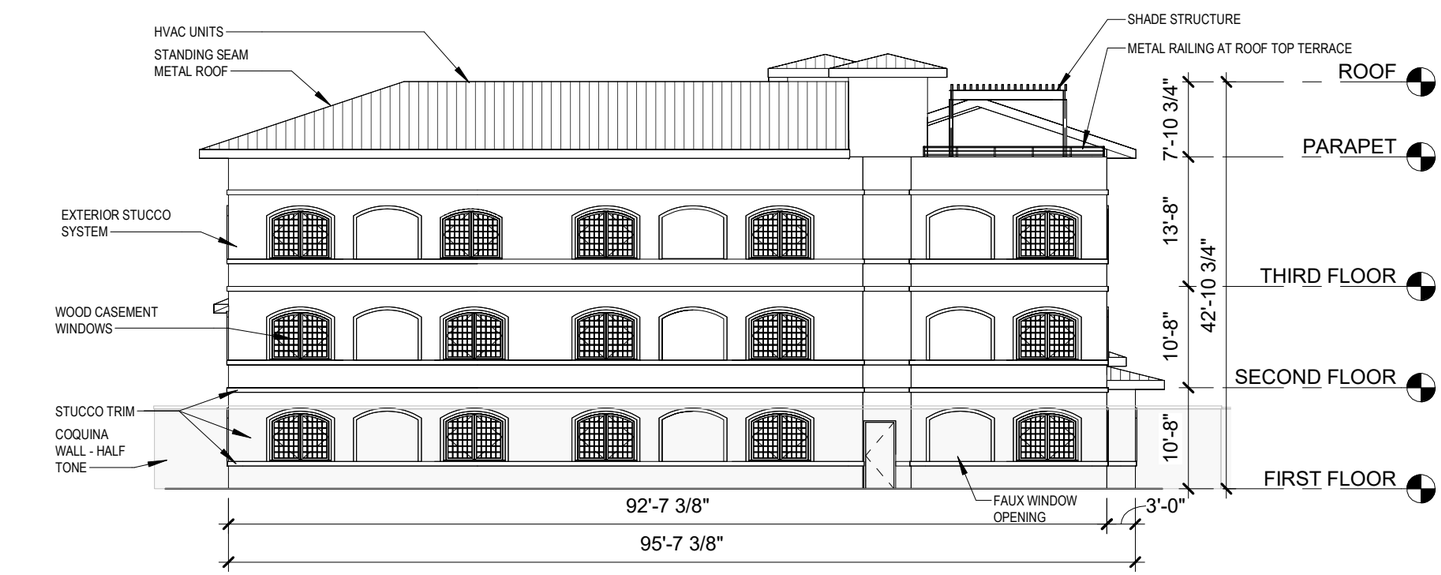

EAST ELEVATION (AVILES STREET)

SCALE: 1/16" = 1'-0"

0' 12' 24' 36'

SISTERS OF ST. JOSEPH

NEW MOTHERHOUSE

ELEVATIONS

010389.001

SCHEMMER

Design with Purpose. Build with Confidence.

Received July 1. 2025
Planning and Building Department

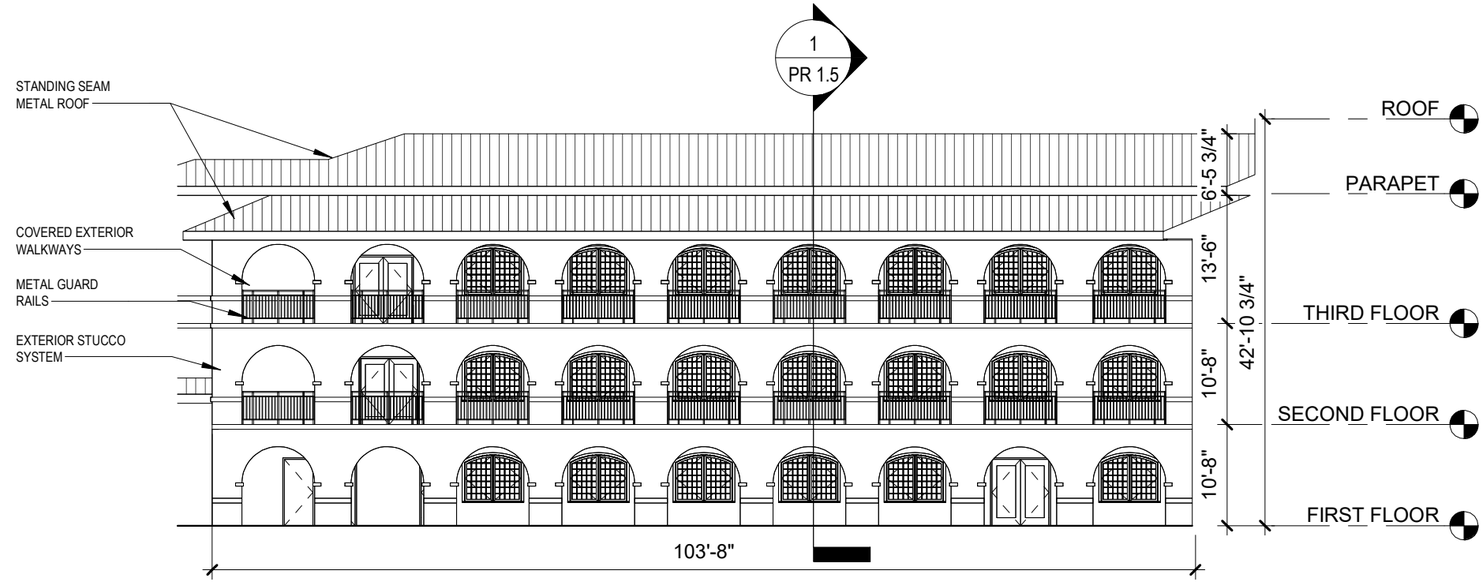

1 COURTYARD FACING NORTH

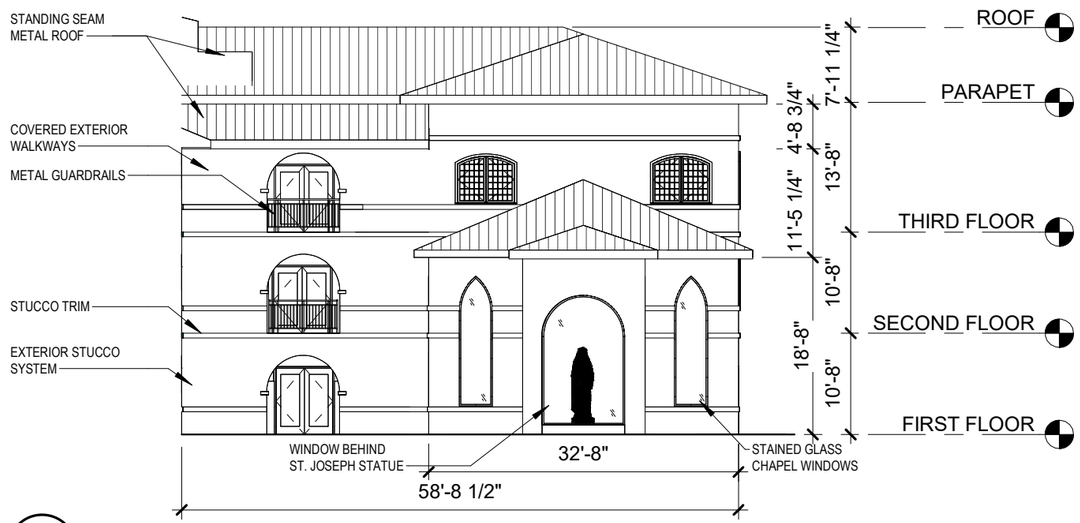

2 COURTYARD FACING EAST

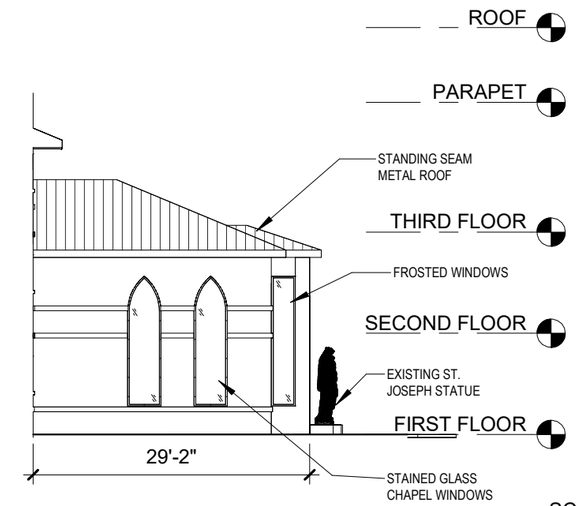

3 COURTYARD FACING SOUTH

SCALE: 1/16" = 1'-0"
0' 12' 24' 36'

SISTERS OF ST. JOSEPH
NEW MOTHERHOUSE
COURTYARD ELEVATIONS
010389.001

SCHEMMER
Design with Purpose. Build with Confidence.

Received July 1. 2025
Planning and Building Department

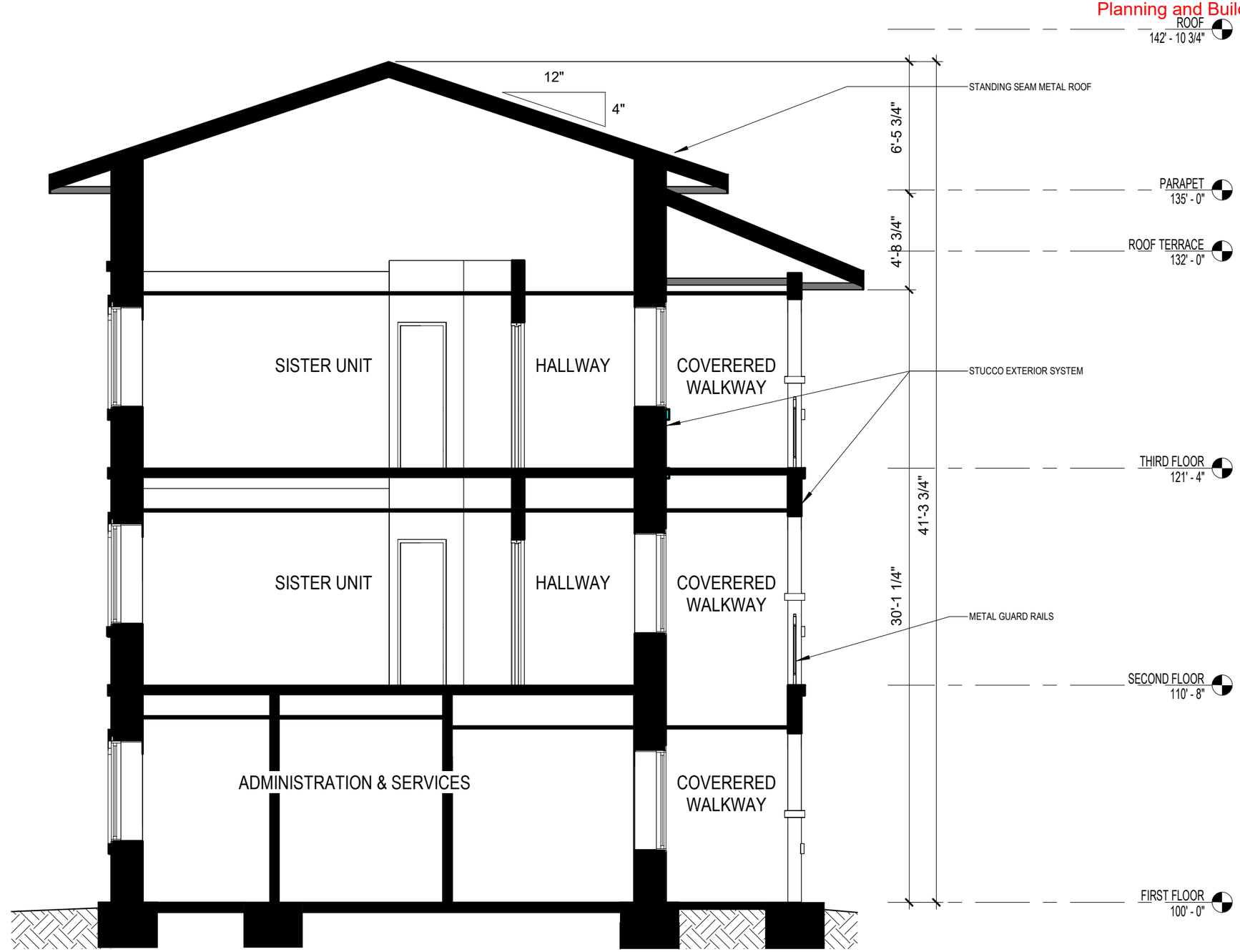

TYPICAL BUILDING SECTION

SCALE: 3/16" = 1'-0"

0' 4' 8' 12'

SISTERS OF ST. JOSEPH
NEW MOTHERHOUSE
BUILDING SECTION
010389.001

SCHEMMER
Design with Purpose. Build with Confidence.

Received July 1. 2025
Planning and Building Department

SISTERS OF ST. JOSEPH
NEW MOTHERHOUSE
OVERHEAD VIEW
010389.001

SCHEMMER
Design with Purpose. Build with Confidence.

Received July 1. 2025
Planning and Building Department

SISTERS OF ST. JOSEPH
NEW MOTHERHOUSE
SOUTHWEST VIEW
010389.001

SCHEMMER
Design with Purpose. Build with Confidence.

Received July 1. 2025
Planning and Building Department

SISTERS OF ST. JOSEPH
NEW MOTHERHOUSE
NORTHWEST VIEW
010389.001

SCHEMMER
Design with Purpose. Build with Confidence.

Received July 1. 2025
Planning and Building Department

SISTERS OF ST. JOSEPH
NEW MOTHERHOUSE
NORTHEAST VIEW
010389.001

SCHEMMER
Design with Purpose. Build with Confidence.

Received July 1. 2025
Planning and Building Department

SISTERS OF ST. JOSEPH

NEW MOTHERHOUSE

SOUTHEAST VIEW

010389.001

SCHEMMER
Design with Purpose. Build with Confidence.

Received July 1. 2025
Planning and Building Department

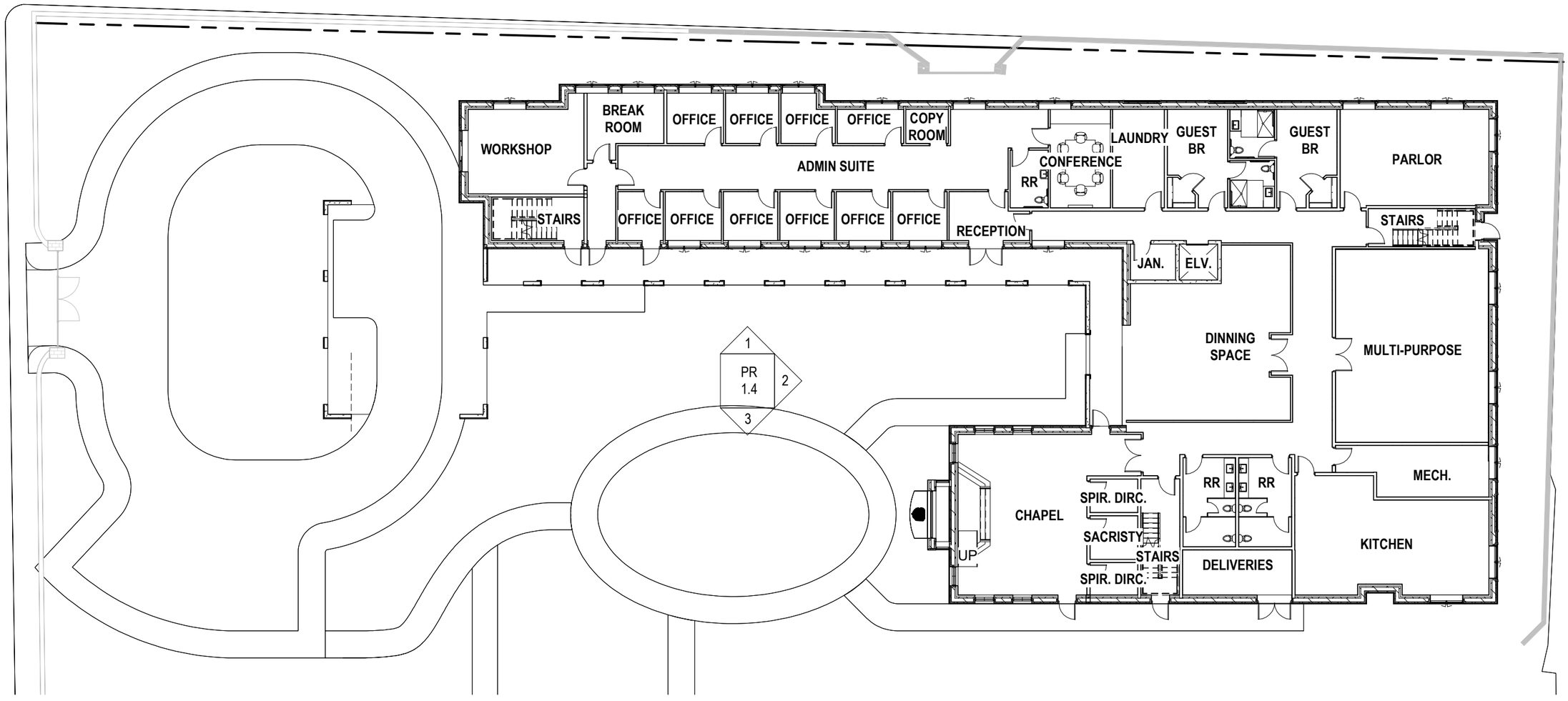

FIRST FLOOR - AREA PLANS

SISTERS OF ST. JOSEPH

NEW MOTHERHOUSE

FLOOR PLAN - LEVEL 1

010389.001

SCALE: 1" = 20'-0"

0' 30' 60' 90'

SCHEMMER

Design with Purpose. Build with Confidence.

Received July 1. 2025
Planning and Building Department

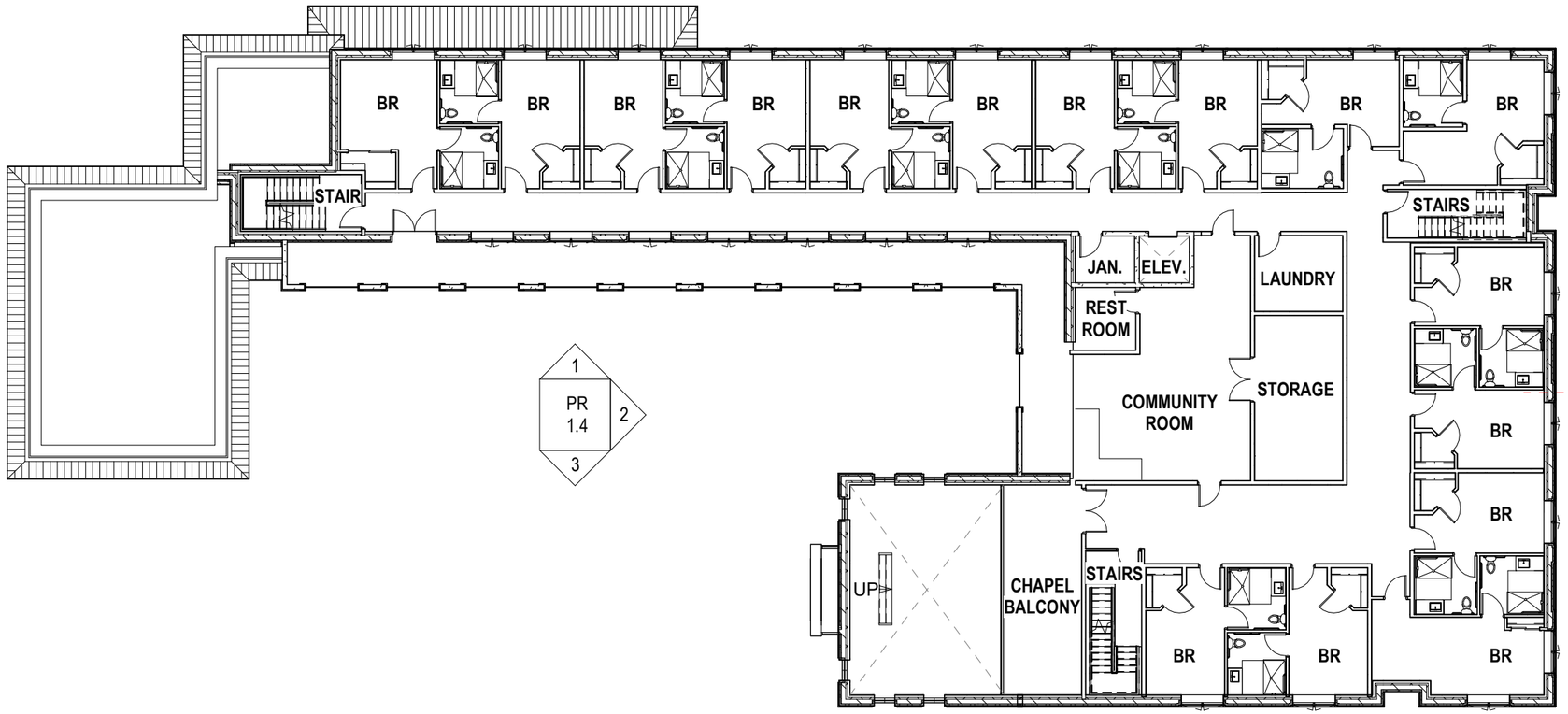

SECOND FLOOR - AREA PLANS

SISTERS OF ST. JOSEPH
NEW MOTHERHOUSE
FLOOR PLAN - LEVEL 2
010389.001

SCALE: 1" = 20'-0"
0 ' 30 ' 60 ' 90 '

SCHEMMER
Design with Purpose. Build with Confidence.

Received July 1. 2025
Planning and Building Department

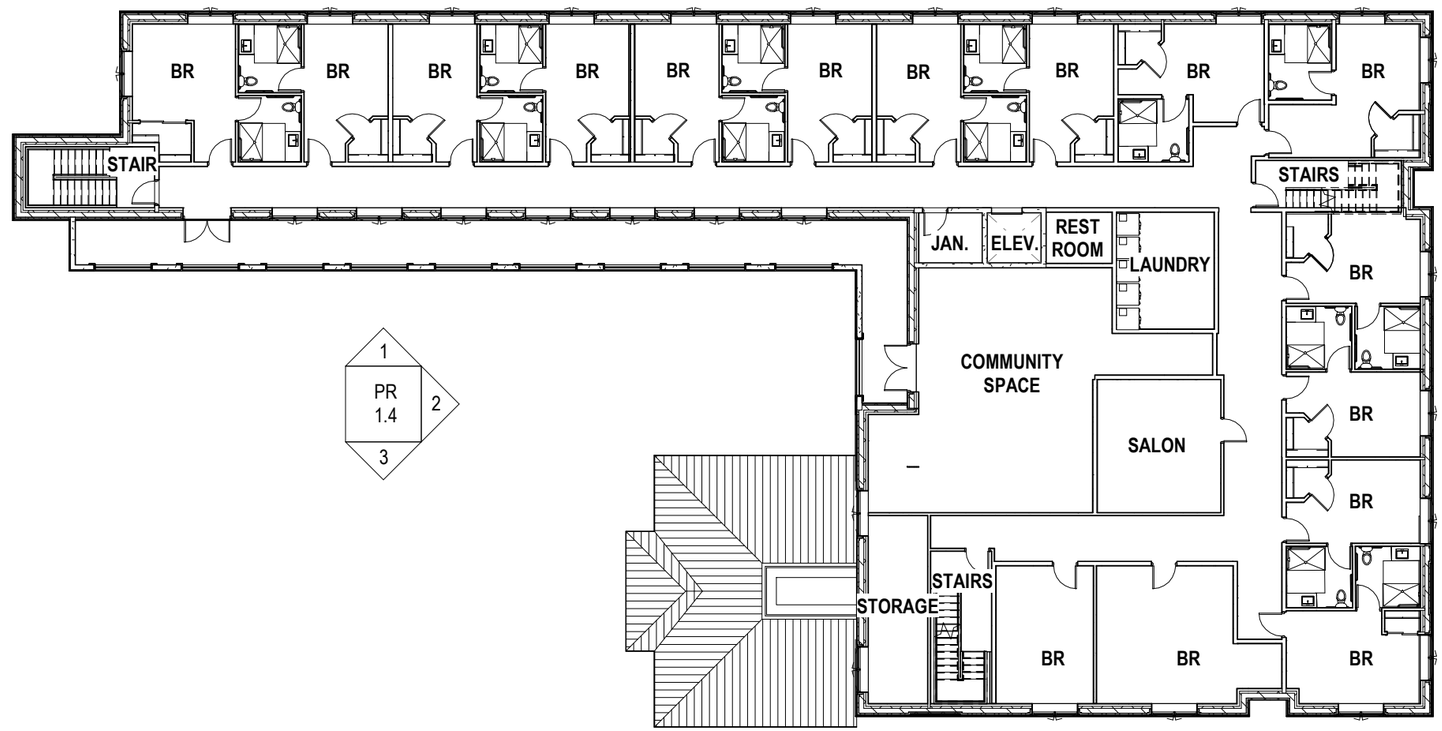

THIRD FLOOR - AREA PLAN

SISTERS OF ST. JOSEPH

NEW MOTHERHOUSE

FLOOR PLAN - LEVEL 3

010389.001

SCALE: 1" = 20'-0"

0' 30' 60' 90'

SCHEMMER

Design with Purpose. Build with Confidence.

Received July 1. 2025
Planning and Building Department

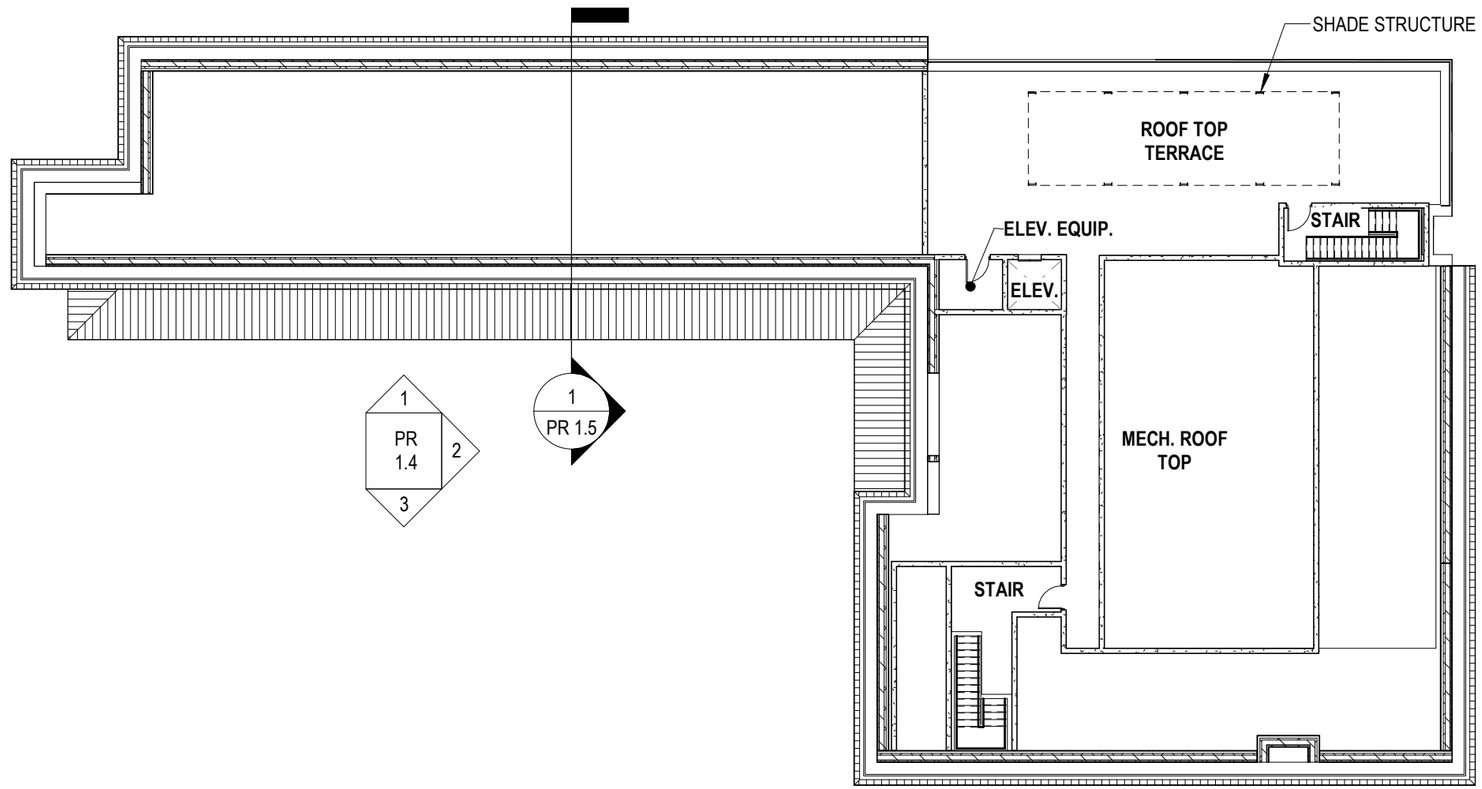

ROOF TERRACE

SISTERS OF ST. JOSEPH
NEW MOTHERHOUSE
FLOOR PLAN - ROOF TERRACE
010389.001

SCALE: 1" = 20'-0"
0' 30' 60' 90'

SCHEMMER
Design with Purpose. Build with Confidence.

Received July 1. 2025
Planning and Building Department

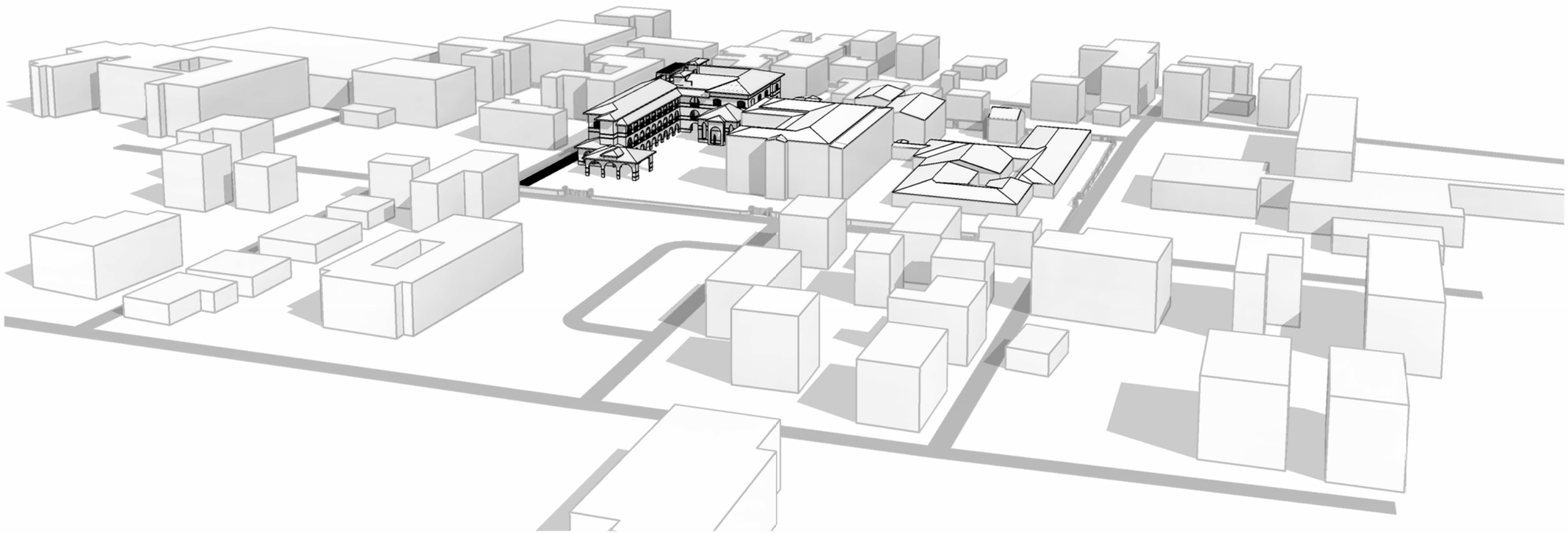

SISTERS OF ST. JOSEPH

NEW MOTHERHOUSE

SITE - OVERHEAD VIEW

010389.001

SCHEMMER

Design with Purpose. Build with Confidence.

Received July 1. 2025
Planning and Building Department

STREET VIEW WEST - EAST

SCALE: 1" = 40'-0"

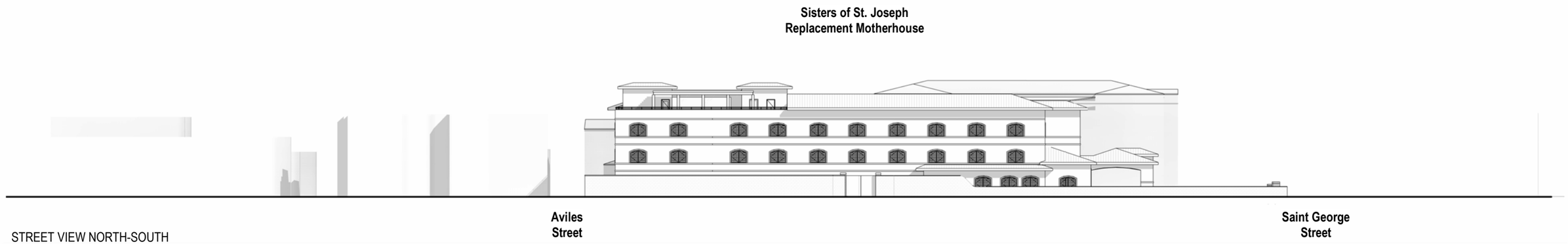

STREET VIEW NORTH-SOUTH

SCALE: 1" = 40'-0"

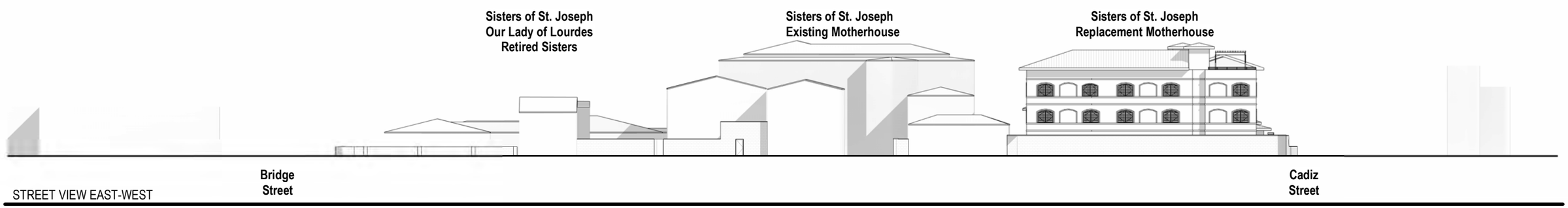

STREET VIEW EAST-WEST

SCALE: 1" = 40'-0"

SISTERS OF ST. JOSEPH

NEW MOTHERHOUSE

STREET VIEWS

010389.001

SCHEMMER

Design with Purpose. Build with Confidence.

Received July 1. 2025
Planning and Building Department

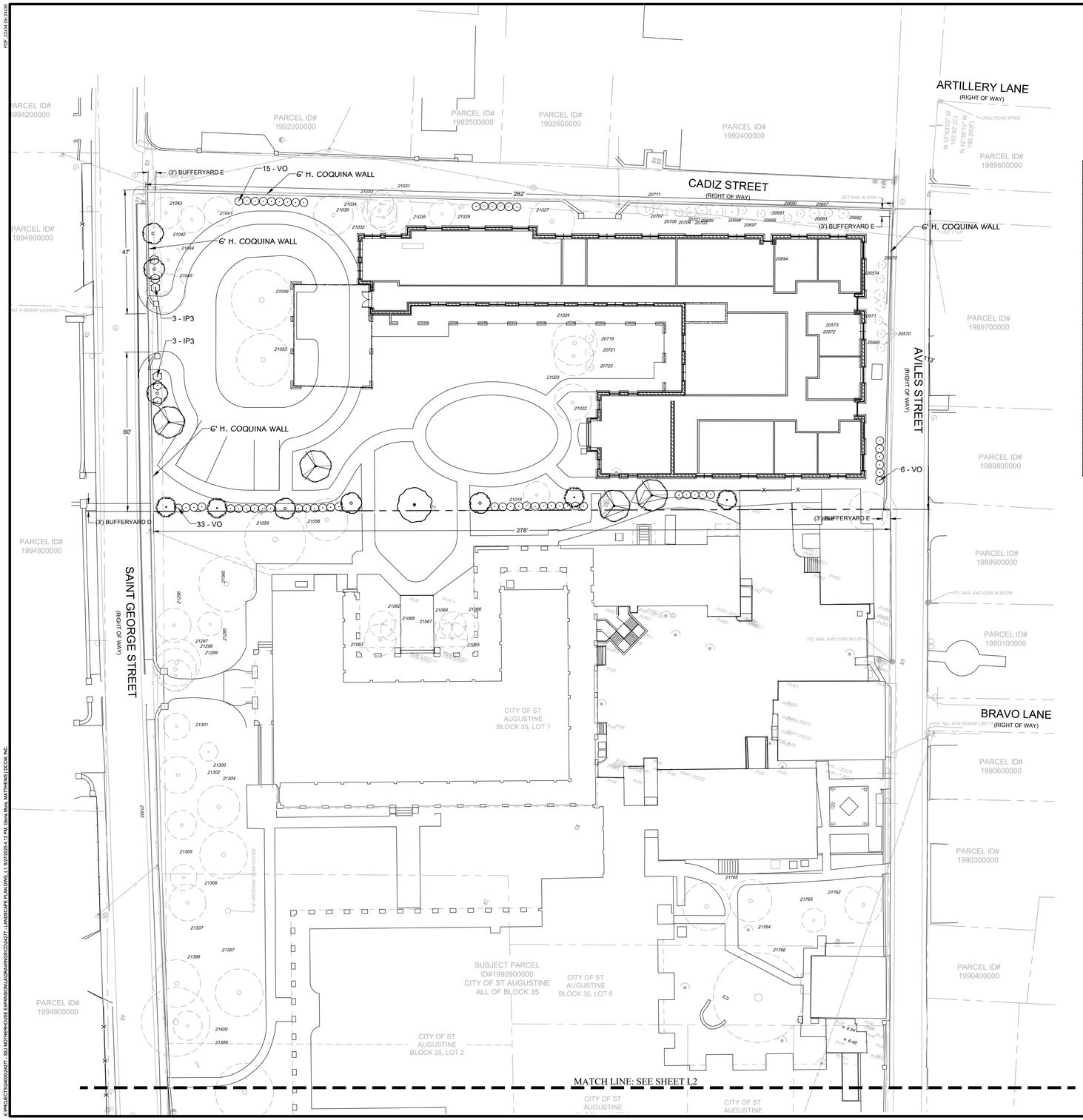

GRAPHIC SCALE

0 20 30 40

1"=20'

PERIMETER AND PARKING CALCULATIONS						
PLANTING REQUIRED						
BUFFERYARD	LOCATION	LINEAR FT.	REQUIRED	TREES	REQUIRED	SHRUBS
FRONT E, 3 FT	SAINT GEORGE STREET	107	0.9 X 3 TREES PER 100 L.F.	3	6 SHRUBS PER 100 FT	6
FRONT E, 3 FT	AVILES STREET	113	0.9 X 3 TREES PER 100 L.F.	3	6 SHRUBS PER 100 FT	7
FRONT E, 3 FT	CADIZ STREET	282	0.9 X 3 TREES PER 100 L.F.	8	6 SHRUBS PER 100 FT	17
REAR D, 5 FT	SOUTH	278	4 TREES PER 100 L.F.	11	12 SHRUBS PER 100 FT	33
PLANTING PROVIDED						
	IDENTITY	FT.	EXISTING TREES	TREES PROPOSED	TOTAL TREES	TOTAL SHRUBS
FRONT YARD	SAINT GEORGE STREET	107	3	3	6	6
FRONT YARD	AVILES STREET	113	7	0	7	7
FRONT YARD	CADIZ STREET	282	14	0	14	17
REAR YARD	SOUTH	278	1	10	11	33
INTERNAL LANDSCAPE						
		TOTAL PAVED AREA		3,584.00	S.F.	
	INTERNAL LANDASCAPE AREA REQUIRED IS 5% OF PAVED AREA			N/A	S.F.	
		TOTAL INTERNAL LANDSCAPING AREA		N/A	S.F.	
		PERCENTAGE OF INTERNAL LANDSCAPE AREA		N/A		
		REQUIRED 1 TREE / 100 S.F. INTERNAL LANDSCAPE		N/A	TREE	
		TOTAL TREES INTERNAL		N/A		

TREE CALCULATIONS: PROPOSED								
TREES PROPOPSED					RATIO OF REQUIRED TREES			
QTY	TREE SPECIES	CREDITS EACH	CREDITS TOTAL		TYPE	QTY	%	% TOTAL
6	EAGLESTON HOLLY	0	0		SHADE TREES	9	50% MINIMUN	60%
4	SOUTHERN RED CEDAR	0	0		UNDERSTORY TREES	6	50% MAXIMUM	40%
1	LIVE OAK	0	0		PALMS	0	25% MAXIMUM	0%
4	WINGED ELM	0	0		TREE TOTAL	15		
		CREDIT TOTAL	0					

PLANT SCHEDULE

SYMBOL	CODE	BOTANICAL NAME	COMMON NAME	NATIVE	SIZE	CANOPY	QTY	REMARKS
TREES								
	IP	Ilex x attenuata 'East Palatka'	East Palatka Holly	YES	2" Cal./10' ht	8'	6	30'-45' HEIGHT, 15' CANOPY SPREAD
	JS	Juniperus silicicola	Southern Red Cedar	YES	2" Cal./10' ht	8'	4	25'-45' HEIGHT, 20'-30' CANOPY SPREAD
	QV	Quercus virginiana	Live Oak	YES	2" Cal./10' ht	13'	1	60'-80' HEIGHT, 60'-120' CANOPY SPREAD
	UA	Ulmus alata	Winged Elm	NO	2" Cal. / 10' Ht.	12'	4	45'-70' HEIGHT, 30'-40' CANOPY SPREAD
SYMBOL	CODE	BOTANICAL NAME	COMMON NAME	NATIVE	SIZE		QTY	REMARKS
SHRUBS								
	IP3	Illicium floridanum	Florida Anise	YES	24" Ht.		6	
	VO	Viburnum odoratissimum	Sweet Viburnum	NO	24" Ht. x 24" Sp.		54	

NOT FOR CONSTRUCTION. PERMIT PURPOSES ONLY.

LANDSCAPE ARCHITECT
ERIC J. LANEHART
CA#C6555 FL#LA0666007

REVISIONS

NO.	DATE	DESCRIPTION
----	----	----
----	----	----
----	----	----
----	----	----
----	----	----

DSGN BY:	EJL
DWG BY:	EJL
CHK BY:	EJL
DATE:	6/27/2025
JOB NO:	24277

Matthews DESIGN GROUP INC.
P.O. BOX 3126, 7 WALDO STREET
ST. AUGUSTINE, FL 32084
PHONE: 904.826.1334 • FAX: 904.826.4547
INFO@MDGINC.COM

LANDSCAPE PLAN

MOTHERHOUSE EXPANSION

ST. JOHNS COUNTY

PREPARED FOR
CLIENT

SHEET No.:
L1
OF XX

Received July 1. 2025
Planning and Building Department

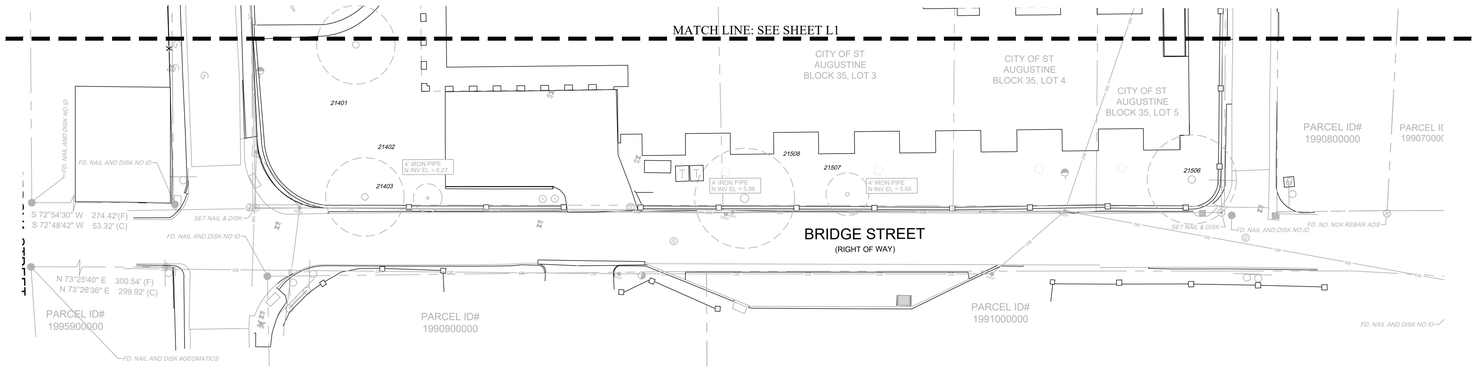

GRAPHIC SCALE

0 20 30 40

1"=20'

NUMBER	TREE SPECIES	DBH	CREDITS TO REMAIN	CREDITS TO REMOVE	CREDITS	DEFICITS
20567	TR-PECAN 15	15		3		
20568	TR-PECAN 15	15	3			
20569	TR-CED 3	3	1			
20570	TR-CED 3	3	1			
20571	TR-CED 3	3	1			
20572	TR-CED 4	4	1			
20573	TR-CED 4	4	1			
20574	TR-CED 3	3	1			
20575	TR-CED 3	3	1			
20681	TR-PEC 19 DEAD*	19		3		
20682	TR-CED 4	4	1			
20683	TR-CED 3	3	1			
20687	TR-CED 4	4	1			
20690	TR-CED 3	3	1			
20691	TR-CED 3	3	1			
20694	TR-CED CLUSTER 3"+2"+2"+2"+2"+2	13	3			
20696	TR-CED 3	3	1			
20697	TR-CED 3	3	1			
20698	TR-CED 5	5	1			
20699	TR-CED 5	5	1			
20701	TR-CED 4	4	1			
20702	TR-CED 4	4	1			
20704	TR-CED 3	3	1			
20706	TR-CED 4	4	1			
20707	TR-CED 3	3	1			
20709	TR-CED 3	3		1		
20710	TR-CED 3	3		3		
20711	TR-PEC 7"+6	13	3			
20713	TR-CED 3	3		1		
20715	TR-CED 3	3		1		
20718	TR-CED 3	3		1		
20719	TR-CED 3	3	1			
20721	TR-CED 3	3	1			
20723	TR-CED 3	3	1			
20724	TR-CED 3	3		1		
20726	TR-CED 3	3		1		
20727	TR-CED 3	3		1		
20728	TR-CED 3	3		1		
20729	TR-CED 3	3		1		
21018	TR-CED 10"+7	17	3			
21019	TR-MAP 11	11		2		
21020	TR-MAP 13	13		3		
21021	TR-PINE 16	16		3		
21022	TR-PINE 14	14	3			
21023	TR-PINE 15	15	3			
21024	TR-PINE 17	17	3			
21025	TR-SPM 9	9		2		
21026	TR-SPM 9	9		2		
21027	TR-SPM 17	17	3			
21028	TR-SPM 20	20		3		
21029	TR-SPM 10	10	2			
21030	TR-LAO 25	25		4		
21031	TR-SPM 17	17	3			
21032	TR-SPM 13	13	3			
21033	TR-SPM 10	10	2			
21034	TR-CRM 3 DEAD?	3	1			
21035	TR-SPM 10	10	2			
21036	TR-SPM 15	15	3			
21038	TR-SPM 13	13		3		
21039	TR-SPM 10	10		2		
21040	TR-SPM 10	10		2		
21041	TR-SPM 11	11	2			
21042	TR-SPM 10	10	2			
21043	TR-SPM 12	12	3			
21044	TR-SPM 11	11	2			
21045	TR-SPM 15	15	3			
21046	TR-SPM 12	12		3		
21047	TR-SPM 15	15		3		
21049	TR-LAO 23	23	4			
21053	TR-LAO 20	20	4			
21054	TR-SPM 12	12		3		
21055	TR-CED 10"+9"+9	28		4		
21056	TR-CED 17	17		3		
21057	TR-MAP 17	17		3		
21058	TR-MAP 16	16	3			
21059	TR-SGM 23	23	4			
21060	TR-CED 21"+12"+10	43	4			
21061	TR-CRM 4	4		1		
21062	TR-SPM 10	10	2			
21063	TR-SPM 12	12	3			
21064	TR-SPM 10	10	2			
21065	TR-SPM 12	12	3			
21066	TR-SPM 10	10	2			
21067	TR-SAGO 7	7	2			
21068	TR-SAGO 8	8	2			
21295	TR-HOL 9	9	2			
21296	TR-SPM 13	13	3			
21297	TR-SPM 18	18	3			
21298	TR-SPM 16	16	3			
21299	TR-SPM 12	12	3			
21300	TR-HOL 7"+5	12	3			
21301	TR-SPM 10	10	2			
21302	TR-SPM 14	14	3			
21303	TR-SPM 11	11	2			
21304	TR-CED 16	16	3			
21305	TR-PINE 18	18	3			
21306	TR-SPM 10	10	2			
21307	TR-PEC 14	14	3			
21397	TR-MAG 18"+12	30	4			
21398	TR-CED 18	18	3			
21399	TR-CED 26	26	4			
21400	TR-SPM 11	11	2			
21401	TR-PEC 22	22	4			
21402	TR-OAK 22	22	4			
21403	TR-HAC 8	8	2			
21506	TR-CED 25"+16	41	4			
21507	TR-SPM 12	12	3			
21508	TR-ELM 28	28	4			
21762	TR-SPM 14	14	3			
21763	TR-SPM 9	9	2			
21764	TR-SPM 16	16	3			
21765	TR-CED 18+13	31	4			
21766	TR-OAK 34	34	4			
	TOTAL CREDITS		196	64		

NOT FOR CONSTRUCTION. PERMIT PURPOSES ONLY.

LANDSCAPE ARCHITECT
ERIC J. LANEHART
CA#C0000325 FL#LA0666007

REVISIONS

NO.	DATE	DESCRIPTION
----	----	----
----	----	----
----	----	----
----	----	----
----	----	----

DSGN BY:	EJL
DWG BY:	EJL
CHK BY:	EJL
DATE:	06/27/2025
JOB No.:	24277

Matthews | DCCM
P.O. BOX 3126, 7 WALDO STREET
ST. AUGUSTINE, FL 32084
PHONE: 904.826.1334 • FAX: 904.826.4547
INFO@MDGINC.COM

LANDSCAPE PLAN

MOTHERHOUSE EXPANSION

ST. JOHNS COUNTY

PREPARED FOR
CLIENT

SHEET No.:
L2
OF XX

PDF 22x34 On 24x36
X:\PROJECTS\24\0024277 - SSJ MOTHERHOUSE EXPANSION\LA\DRAWINGS\0024277 - LANDSCAPE PLAN.DWG, L2, 6/27/2025 4:12 PM, Gloria Mora, MATTHEWS | DCCM, INC.

Received July 1. 2025
Planning and Building Department

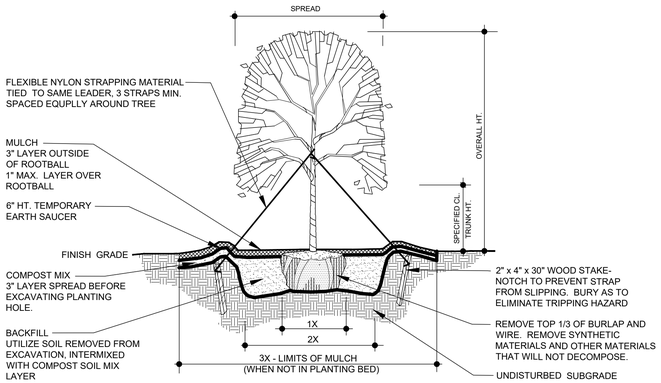

NOTES:
- PLANT TOP OF ROOT BALL 2" ABOVE FINISH GRADE.
- BOTTOM OF ROOT BALL SHALL BE SEATED DIRECTLY ON UNDISTURBED SUBGRADE.
- TOPMOST ROOT-ROOT FLARE SHALL BE MADE VISIBLE PRIOR TO PLANTING.
- ROOT DEFECTS - INSPECT ROOT BALL FOR ROOT DEFECTS, CUT ROOTS WHERE THEY BEGIN TO KINK OR CIRCLE. ROOT BALL SHALL COMPLY WITH FLORIDA GRADES AND STANDARDS.
- STAKE ABOVE FIRST STRONG BRANCHES TO PROVIDE FIRM SUPPORT.

TREE PLANTING - SINGLE TRUNK

N.T.S.

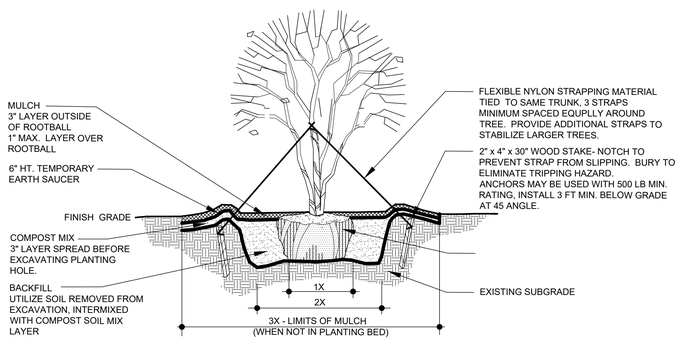

NOTES:
- PLANT TOP OF ROOT BALL 2" ABOVE FINISH GRADE.
- BOTTOM OF ROOT BALL SHALL BE SEATED DIRECTLY ON UNDISTURBED SUBGRADE.
- TOPMOST ROOT-ROOT FLARE SHALL BE MADE VISIBLE PRIOR TO PLANTING.
- ROOT DEFECTS - INSPECT ROOT BALL FOR ROOT DEFECTS, CUT ROOTS WHERE THEY BEGIN TO KINK OR CIRCLE. ROOT BALL SHALL COMPLY WITH FLORIDA GRADES AND STANDARDS.
- STAKE ABOVE FIRST STRONG BRANCHES TO PROVIDE FIRM SUPPORT.

MULTIPLE STEM TREE PLANTING

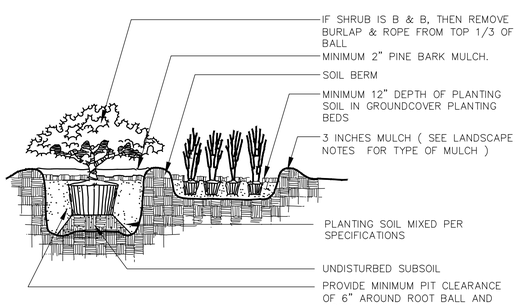

SHRUB AND GROUND COVER PLANTING DETAIL

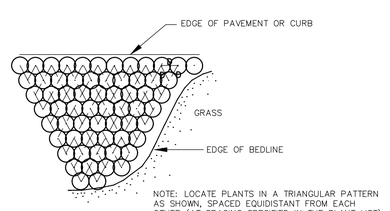

SHRUB/GROUNDCOVER SPACING PLAN

1. THE LANDSCAPE CONTRACTOR IS RESPONSIBLE FOR VERIFYING PROJECT SITE CONDITIONS AND ALL QUANTITIES INDICATED ON THESE PLANS BEFORE COMMENCING ANY WORK. LANDSCAPE CONTRACTOR SHALL NOTIFY THE LANDSCAPE ARCHITECT IF SOIL CONDITIONS ARE POORLY DRAINED TO DETERMINE IS SUBSTITUTION OF MATERIALS IS NECESSARY.
2. ALL PLANT MATERIAL SHALL BE FLORIDA GRADE NO. 1 OR BETTER NURSERY GROWN IN ACCORDANCE TO FLORIDA GRADES AND STANDARDS
3. ALL PLANT MATERIAL SHALL BE CONTAINER GROWN OR B&B. B&B MATERIALS SHALL BE "HARDENED OFF" ROOT PRUNED DURING FIELD PRODUCTION AND SHALL BE DUG AT LEAST SEVERAL WEEKS BEFORE.
4. PLANTS SHALL BE SOUND, HEALTHY AND VIGOROUS, WELL BRANCHED AND DENSELY FOLIATED WHEN IN LEAF. THEY SHALL BE FREE OF DISEASE, INSECTS, EGGS OR LARVAE AND SHALL HAVE HEALTHY, WELL DEVELOPED ROOT SYSTEMS. THEY SHALL BE FREE FROM PHYSICAL DAMAGE OR ADVERSE CONDITIONS THAT WOULD PREVENT THRIVING GROWTH.
5. SUBSTITUTION OF PLANT MATERIALS WILL NOT BE PERMITTED UNLESS AUTHORIZED IN WRITING BY THE LANDSCAPE ARCHITECT. IF PROOF IS SUBMITTED THAT ANY PLANT SPECIFIED IN NOT OBTAINABLE, A PROPOSAL WILL BE CONSIDERED FOR USE OF THE NEAREST EQUIVALENT SIZE OR VARIETY WITH CORRESPONDING ADJUSTMENT OF CONTRACT PRICE.
6. LANDSCAPE CONTRACTOR SHALL BEAR FINAL RESPONSIBILITY FOR PROPER SURFACE DRAINAGE OF PLANTED AREAS. ANY DISCREPANCY IN THE DRAWINGS, OBSTRUCTION ON THE SITE, OR PRIOR TO WORK DONE BY ANY OTHER PARTY, WHICH THE CONTRACTOR FEELS PRECLUDES ESTABLISHING PROPER DRAINAGE SHALL BE BROUGHT TO THE ATTENTION OF THE LANDSCAPE ARCHITECT FOR CORRECTION OR RELIEF OF SAID RESPONSIBILITY.
7. PLANTING BEDS SHALL BE CUT OR EDGED TO FORM A UNIFORM CLEAN LINE BETWEEN BEDS AND LAWN AREAS.
8. AFTER ALL PLANT MATERIAL IN A PLANT BED AREA HAS BEEN INSTALLED AND APPROVED, THE AREAS BETWEEN PLANTS SHALL BE RAKED TO AN EVEN GRADE TO CONFORM TO PREMULCHING FINISH GRADES. ALL PLANTING BEDS AND PLANT SAUCERS SHALL THEN BE UNIFORMLY COVERED WITH A MINIMUM THREE (3) INCHES OF #2 GRADE OR BETTER OF PINE BARK MINI NUGGETS.
9. BEFORE FERTILIZATION A SOIL AND/OR FOLIAR NUTRIENT ANALYSIS SHALL BE PERFORMED TO DETERMINE WHETHER PHOSPHORUS FERTILIZER WITH 30% SLOW RELEASE NITROGEN WILL BE REQUIRED. ALL PLANTING BED AREAS SHALL BE FERTILIZED APPROXIMATELY 4-6 WEEKS AFTER INSTALLATION.
10. PLANT MATERIAL SOIL SHALL BE "NATIVE" SOIL THAT WAS REMOVED FROM THE PLANTING HOLE. IF SOIL IS BADLY CONTAMINATED, GOOD QUALITY SOIL SHALL BE USED AS REPLACEMENT AFTER CONTAMINATED SOIL HAS BEEN COMPLETELY REMOVED FROM PLANTING AREA.
11. AFTER SODDING IS COMPLETED, THE ENTIRE SIDE AREAS SHALL BE WATERED BY HAND OR IRRIGATION SYSTEM EACH DAY FOR TWO WEEKS. AFTER APPROXIMATELY ONE MONTH OF INSTALLATION, SODDED AREAS SHALL THEN BE TOP DRESSED WITH A 15-0-15 COMMERCIAL SLOW-RELEASE FERTILIZER AT A RATE OF 6.67 POUNDS PER 1,000 SQUARE FEET OF AREA IN AN EVENLY BROAD-CASE PATTERN.
12. THE LANDSCAPE CONTRACTOR IS RESPONSIBLE FOR ALL FINE GRADING PREPARATION FOR PLANTING. APPLY PRE-EMERGENT TO ALL BEDS PRIOR TO PLANTING.
13. ROUGH GRADES WILL BE ESTABLISHED BY THE OWNERS GENERAL CONTRACTOR AT APPROXIMATELY 3 INCHES BELOW CURBS, SIDEWALKS, HARDSCAPE AMENITIES, MOWING STRIPS AND ABUTMENTS. ALL MATERIALS SHALL BE A MINUMIM 30" FROM BUILDINGS OR WALKS.
14. SOD AREAS WILL BE BAHIA GRASS. SOD AREAS SHALL BE SPECIFIED GRASS. GRASS FOR SODDING SHALL BE FRESHLY CUT IN SQUARES ONE FOOT WIDE BY 2' LONG.
15. SOD SHALL BE LAID END TO END AND SIDE TO SIDE IN A STAGGERED LINE TO FORM A UNIFORM LAYER. ALL UNEVEN EDGES SHALL BE SQUARELY TRIMMED TO ALLOW CLOSE AND FIRM FITTING OF EACH PIECE.
16. THE LANDSCAPE CONTRACTOR IS RESPONSIBLE FOR FULLY MAINTAINING ALL PLANT MATERIAL ON SITE DURING AND BEFORE PLANTING, UNTIL THE WORK IN ACCEPTED BY THE LANDSCAPE ARCHITECT AND/OR OWNER.
17. ALL PLANT MATERIALS SHALL BE GUARANTEED BY THE LANDSCAPE CONTRACTOR TO BE HEALTHY PLANTS AND IN FLOURISHING CONDITION OF ACTIVE GROWTH FOR NINETY (90) DAYS FROM FINAL INSPECTION AND ACCEPTANCE. ALL TREES SHALL BE GUARANTEED AN ADDITIONAL ONE YEAR FROM FINAL INSPECTION AND ACCEPTANCE.
18. THE LANDSCAPE ARCHITECT, OWNER OR OWNERS REPRESENTATIVE SHALL HAVE THE RIGHT TO REJECT ANY AND ALL WORK WHICH IN HIS OPINION DOES NOT MEET WITH THE REQUIREMENTS OF THE SPECIFICATIONS AT ANY STAGE OF THE PROJECT OPERATION.
19. THERE WILL BE SPECIAL CARE TO ALL EXISTING TREES TO BE RETAINED ON SITE TO AVOID CONSTRUCTION DAMAGE.

NOT FOR CONSTRUCTION. PERMIT PURPOSES ONLY.

LANDSCAPE ARCHITECT
ERIC J. LANEHART
CA#C6000 FL#LA0666937

REVISIONS

NO.	DATE	DESCRIPTION
-----	-----	-----
-----	-----	-----
-----	-----	-----
-----	-----	-----
-----	-----	-----

DESIGN BY:	EJL
DWG BY:	EJL
CHK BY:	EJL
DATE:	06/27/2025
JOB NO.:	24277

Matthews | DCCM
P.O. BOX 3126, 7 WALDO STREET
ST. AUGUSTINE, FL 32084
PHONE: 904.826.1334 • FAX: 904.826.4547
INFO@MDGINC.COM

LANDSCAPE NOTES & SPECIFICATIONS

MOTHERHOUSE EXPANSION
ST. JOHNS COUNTY
PREPARED FOR
CLIENT

SHEET No.:
L3
OF XX

PDF 22x34 On 24x36
X:\PROJECTS\24XXX\24277 - SSJ MOTHERHOUSE EXPANSION\LAYDRAWINGS\CD\24277 - LANDSCAPE PLAN.DWG, L3, 6/27/2025 4:13 PM, Gloria Mute, MATTHEWS I DCCM, INC.

Received June 13, 2025
Planning and Building Department

Matthews | DCCM

Existing Site - Aerial

Received June 13, 2025
Planning and Building Department

Matthews | DCCM

Site History

1904

1910

Received June 13, 2025
Planning and Building Department

Matthews | DCCM

Site History

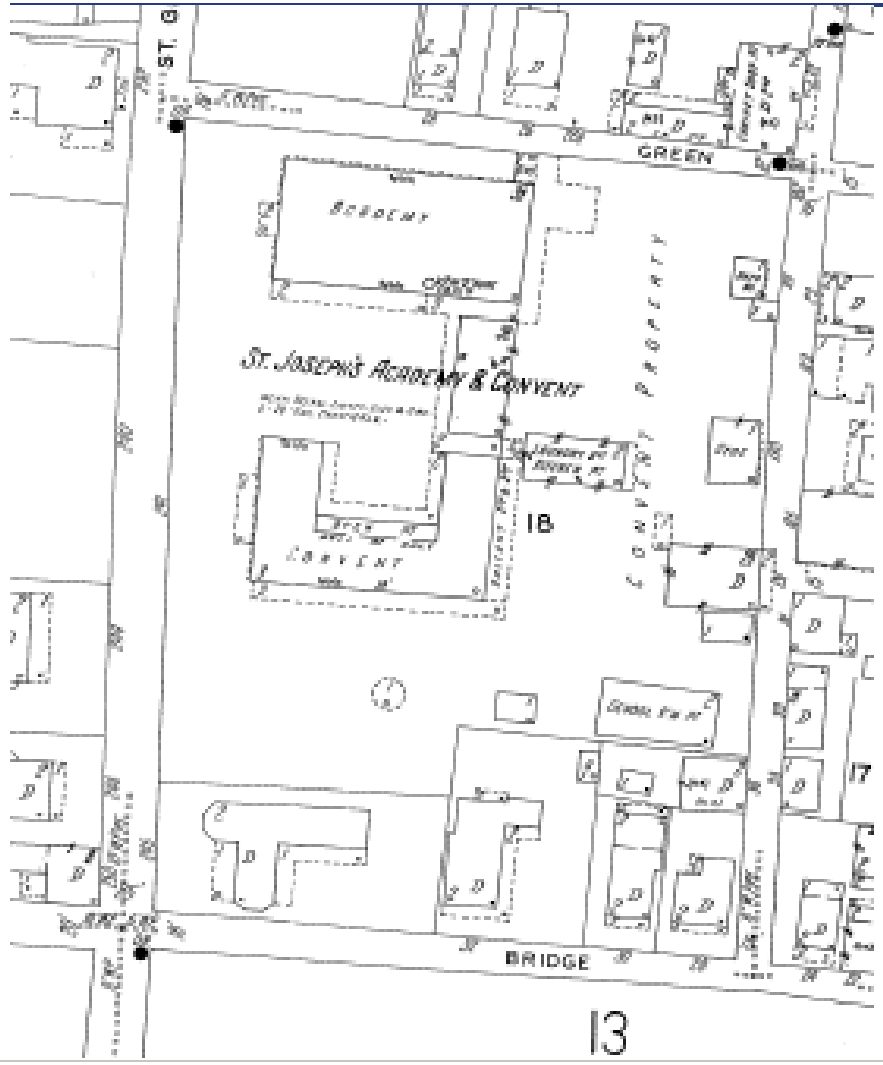

1930

1947

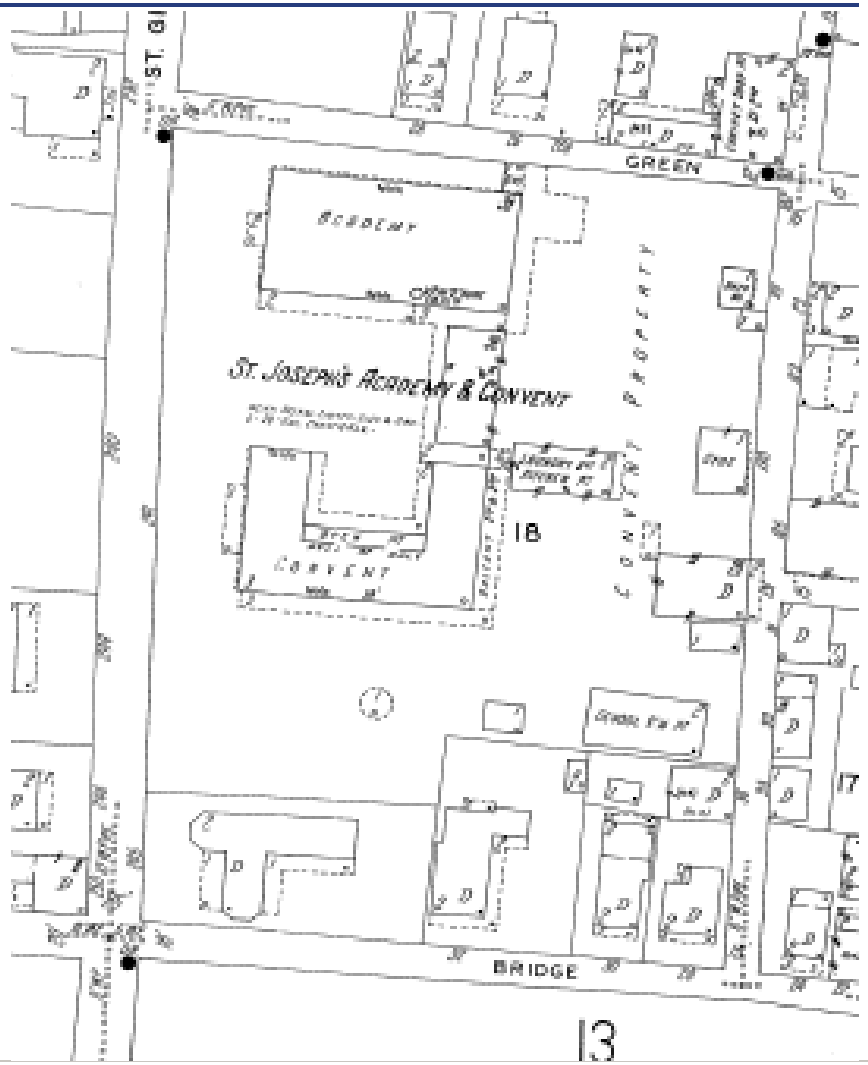

Received June 13, 2025
Planning and Building Department

Matthews | DCCM

Location of Proposed New Motherhouse – Google StreetView 2024

Received June 13, 2025
Planning and Building Department

Existing Motherhouse – Google StreetView 2024

Received June 13, 2025
Planning and Building Department

Matthews | DCCM

Existing Renewal Center – Google StreetView 2024

Received June 13, 2025
Planning and Building Department

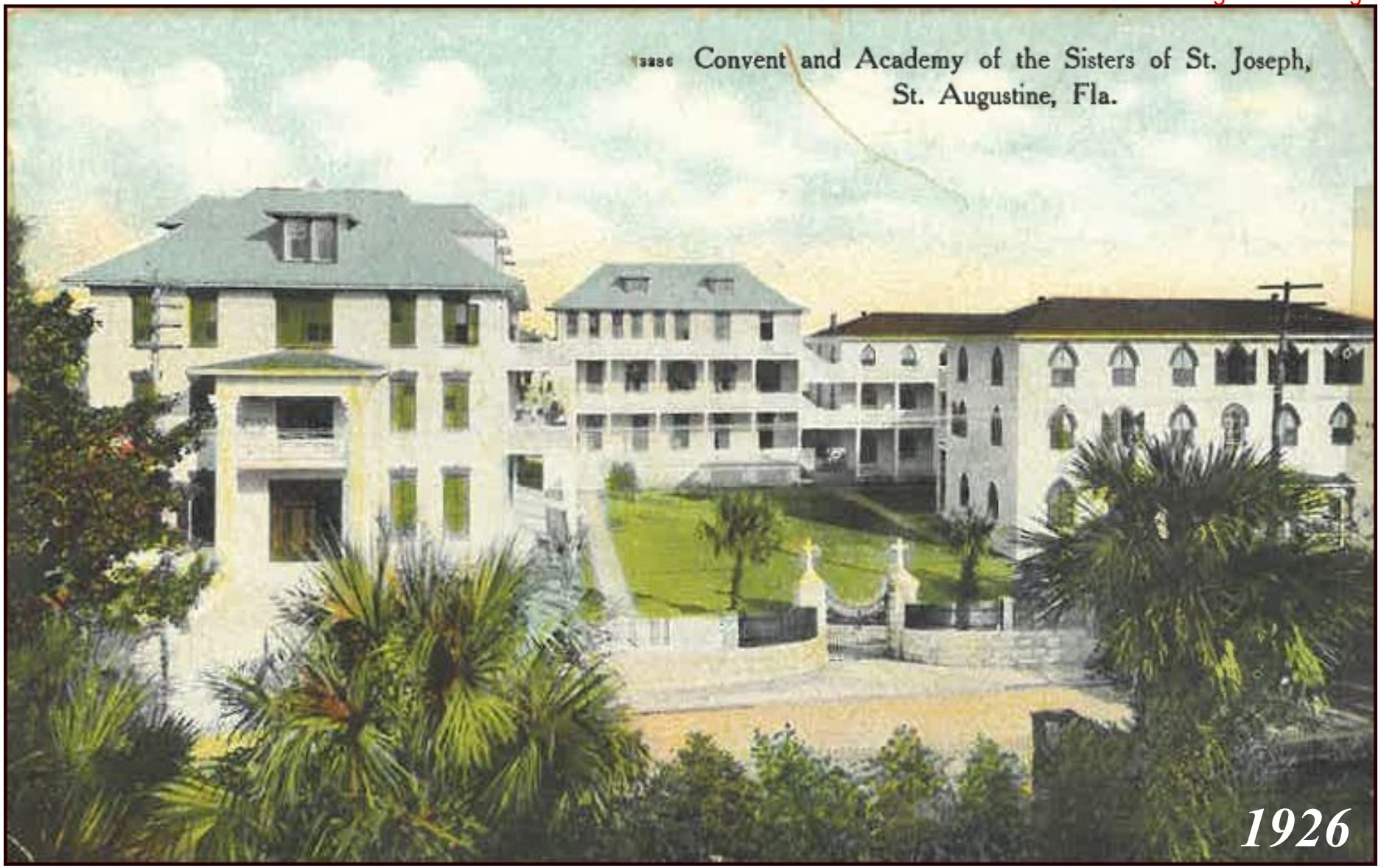

Received June 13, 2025
Planning and Building Department

Received June 13, 2025
Planning and Building Department

St. Joseph Academy – St. Augustine, Fl 1940

Received June 13, 2025
Planning and Building Department

North side of existing Motherhouse

South side of existing Motherhouse

Received June 13, 2025
Planning and Building Department

Former gate to St Joseph Academy in 1940 – no longer existing

Filled in Access Point – general location of existing gate

Received June 13, 2025
Planning and Building Department

Former Gate

Received June 13, 2025
Planning and Building Department

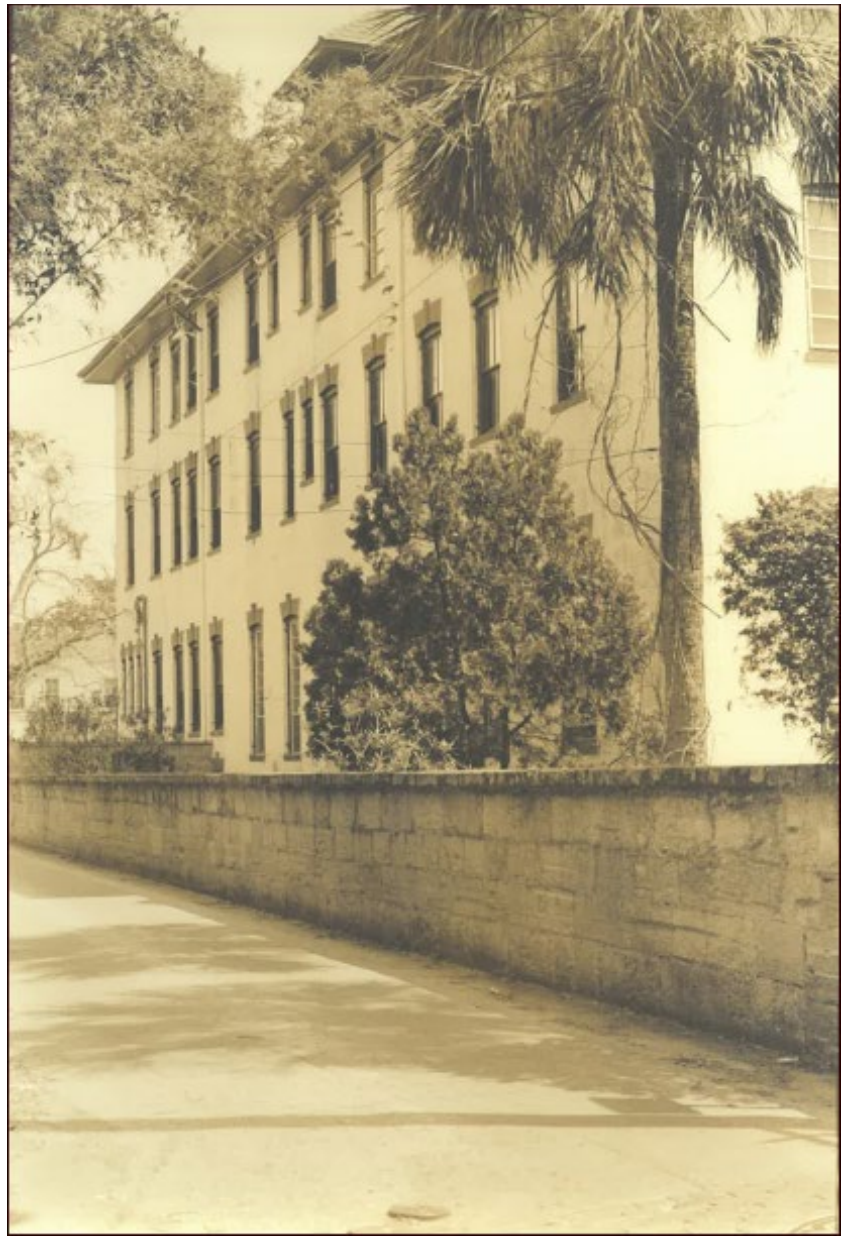

Wall from Cadiz Street – after 1940

Wall from Cadiz Street – Google Street View 2024

Detail by Entity Name

Florida Limited Liability Company
MATTHEWS DESIGN GROUP, LLC

Filing Information

Document Number	L22000424179
FEI/EIN Number	92-0592519
Date Filed	09/30/2022
State	FL
Status	ACTIVE
Last Event	LC AMENDMENT
Event Date Filed	11/08/2022
Event Effective Date	NONE

Principal Address

7 WALDO ST.
ST. AUGUSTINE, FL 32084

Changed: 11/08/2022

Mailing Address

7 WALDO ST.
ST. AUGUSTINE, FL 32084

Changed: 11/08/2022

Registered Agent Name & Address

Clukey & Tebault, LLC
201 Owens Avenue
Unit A
Saint Augustine, FL 32080

Name Changed: 04/24/2023

Address Changed: 04/24/2023

Authorized Person(s) Detail

Name & Address

Title President, CEO

MATTHEWS, ROB
7 WALDO ST.
ST. AUGUSTINE, FL 32084

Title Director

LANEHART, ERIC
7 WALDO ST.
ST. AUGUSTINE, FL 32084

Title Authorized Member

Hewitt, Jeremy
7 WALDO ST.
ST. AUGUSTINE, FL 32084

Title Authorized Member

Garringer , Michael
7 WALDO ST.
ST. AUGUSTINE, FL 32084

Title VP

Acree, Alex
7 WALDO ST.
ST. AUGUSTINE, FL 32084

Annual Reports

Report Year	Filed Date
2024	01/03/2024
2024	10/14/2024
2025	02/06/2025

Document Images

02/06/2025 -- ANNUAL REPORT	View image in PDF format
10/14/2024 -- AMENDED ANNUAL REPORT	View image in PDF format
01/03/2024 -- ANNUAL REPORT	View image in PDF format
11/01/2023 -- AMENDED ANNUAL REPORT	View image in PDF format
10/12/2023 -- AMENDED ANNUAL REPORT	View image in PDF format
07/05/2023 -- AMENDED ANNUAL REPORT	View image in PDF format
04/24/2023 -- ANNUAL REPORT	View image in PDF format
11/08/2022 -- LC Amendment	View image in PDF format
10/05/2022 -- Merger	View image in PDF format
09/30/2022 -- Florida Limited Liability	View image in PDF format

Florida Department of State, Division of Corporations

CITY OF ST AUGUSTINE EST. 1565

CITY OF ST. AUGUSTINE HISTORIC ARCHITECTURAL REVIEW BOARD

STAFF REPORT AND RECOMMENDATION

Prepared for July 15, 2025 Meeting

Application HP2025-0048 Address: 40 Sanford Street

New South Windows – Applicant Clevenstine Woods Joint Trust – Owner

Project description: For after-the-fact wholesale replacement of windows with a different material and design.

Architectural Style:	Frame Vernacular	Florida Master Site File:	SJ01996
National Register:	Lincolnville NRHD: Contributing	Construction date:	c. 1884?
Archaeology Zone:	IIIA	Zoning District:	RS-2
Parcel number:	2028800000		
Agenda Item:	7(a)	Previous Action(s):	N/A

STAFF SUMMARY AND ANALYSIS:

Located on the west side of Sanford Street on the block between Bridge Street and Carrie Johnson Way, this Frame Vernacular residence, constructed c. 1884 according to the Florida Master Site File, is contributing to the Lincolnville National Register Historic District. Sanborn Fire Insurance Maps from 1899 to 1910 show a two-story rectangular dwelling with two-story front porch and a one-story ell or addition off the northwest corner. The 1917 Sanborn Map shows the parcel with only a small tool house structure on the rear. The 1924 and 1930 (updated to 1960) maps show a larger footprint two-story rectangular structure with rear additions that could incorporate the structure shown on previous maps, though this is unclear. The Florida Master Site File Form references a large renovation to the structure in the 1950s which may not have been reflected on the Sanborn Maps. The current building footprint does not appear to include the rear additions seen on the Sanborn.

The applicant is seeking after-the-fact approval for wholesale replacement of windows. A permit application for window replacement was received by the Planning and Building Department on May 7, 2025. The permit was routed to staff for review on May 14. On May 23, prior to finalizing permit review, a member of the HP staff visited the site to determine existing window conditions and discovered that the windows had already been replaced.

Detailed analysis and additional comments can be found in the staff responses to the Demolition Review Criteria on page 3 of this staff report. Any partial demolition of a structure that contributes to a National Register Historic District and entails permanent removal of an exterior architectural feature or replacement with a new feature that does not meet the criteria for in-kind replacement requires review and approval by the HARB.

STAFF RECOMMENDATION:

Based on a review of the AGHP and without the support of evidence to the contrary, staff finds that the board can **APPROVE** a **Certificate of Demolition for Partial Demolition** at **40 Sanford Street** if the HARB finds that the window replacement, as completed or with mitigation as recommended by the Board, maintains the historic character and integrity of the structure and is compatible with the historic structure's building envelope consistent with the Secretary of the Interior's Standards for Rehabilitation #9 as a compatible contemporary design.

Candice Seymour

Candice Seymour, Historic Preservation Planner

SUMMARY SCOPE OF WORK:

1. Partial demolition to include:
    a. Wholesale replacement of replacement and 2/2 wood windows with 1/1 and sliding vinyl windows.

DEMOLITION REVIEW CRITERIA (AGHP):

1. Whether or not the structure is within or is immediately facing a locally designated historic preservation zoning district. N/A

2. Whether or not the structure is within and contributing to a National Register Historic District. Yes, the building contributes to the Lincolnville National Register Historic District.

3. The contribution of the architectural element(s) being proposed for removal to the historic integrity of the building and the streetscape. If Florida Master Site File information is correct, the building is one of the oldest along the block but has seen several changes over time. It is similar in mass and scale to other two-story structures in the neighborhood.

4. The impact of the loss of the architectural element(s) on the building and along the streetscape. The building does not have a unique typology for the area but is very similar to other Frame Vernacular structures from the time period that have seen alterations over time.

5. Whether or not the architectural element(s) will be replaced, and the impact of replacement or lack thereof, on the building and along the streetscape. Based upon old real estate listing photographs, previous windows appear to have been vinyl replacement 6/6 w/ interior muntins and slider windows on the ground floor with mostly 2/2 wood windows on the 2nd story. All windows appear to have been replaced size-for-size with vinyl 1/1 and slider windows. While window depth has been reduced, framing around the windows appears to remain intact which does produce some shadow lines. The vinyl windows sashes are noticeably thicker than the wood windows that were replaced as evident from Google Streetview images.

6. The historical or cultural merit of the structure and/or its architectural features. No historic or cultural associations are known that would qualify the building for listing individually, although contributes to its district.

7. The impact of the loss of the architectural element(s) on the historical or cultural integrity of the structure, district, and neighborhood. It is unclear when the previously existing wood windows were installed, though the 2/2 pattern could have been used as early as 1884. The Florida Master Site File indicated wood 2/2, metal 2/2, and fixed sheet windows were extant around 1980. This is consistent with real estate photos of the 2nd story. There is no record of window replacement on the ground floor, but a renovation permit from 1984 is noted in permit files (no details available).

8. Whether or not the structure and the architectural element(s) proposed for demolition are representative of a style or type of architecture or a method of construction. The wood windows that were replaced were consistent with the architectural style and period of the building.

9. ***Whether or not the structure, or the architectural elements being removed, are the last surviving examples of its style or type of architecture or a method of construction.*** The wood windows, though appropriate for the structure, were not the last surviving example of their style; however, they have been completely removed. They are commonly found throughout Lincolnville and other neighborhoods with development around the same period.

10. ***Whether or not the structure and/or architectural element(s) proposed for demolition are of such design, craftsmanship or materials that they either could not be reproduced or could be reproduced only with great difficulty or expense.*** The wood windows were not of such design that they could not be reproduced. Several modern window manufacturers make 2/2 windows in both wood and other materials that would be more consistent with the architectural character of the building than the vinyl windows that have been installed.

11. ***The justification for the proposed partial demolition.*** Window replacement was completed in conjunction with a larger renovation project. A window condition assessment worksheet was submitted noting that the previously existing windows were in "ok to bad condition." A number of the wood windows were listed as in "ok" condition.

APPLICATION REQUIREMENTS, ELIGIBILITY FOR DEMOLITION REVIEW, CONDITIONS FOR PARTIAL DEMOLITION APPROVAL:

Eligibility for Partial Demolition Review (Section 28-27(3), CoSA Code of Ordinances)

The Historic Architectural Review Board (HARB) is responsible for review of all applications for demolition or partial demolition permits for historic or regulated structures. Also, review of all applications for demolition or partial demolition permits for primary structures within historic preservation zoning districts and National Register districts for potential designation as an historic landmark, and review of partial demolition permits for regulated structures not eligible for administrative approval.

Regulated Structures not eligible for administrative approval (Section 28-2 – Definitions, CoSA Code of Ordinances)

Architectural feature limited review consists of the architectural review of limited physical elements of a regulated structure to be replaced after partial demolition. This limited review will focus on the overall character of the key elements of the structure visible from the street. Key elements that will be reviewed will be roofs (shape, size, placement), exterior windows and doors (number and placement of openings, shape and pattern of panes or lites, and design features visible from outside the regulated structure such as exterior muntin with a raised profile), porches, stoops, and balconies (shape, size, placement), exterior siding (vertical, horizontal, or diagonal placement of similar sized boards, siding profile and pattern). The review is for exterior elements and may include interior works or features of architectural elements. Applications that match the replacements after a partial demolition to these existing key architectural elements or use in-kind features or materials as existing will be deemed in compliance with this limited architectural review and can be approved administratively. Applicants who do not want to use in-kind features or materials as existing, not match the replacements to those existing key architectural elements after partial demolition will be heard at a public hearing before the HARB or other designated reviewing agency. This category of limited review does not apply to properties in the Historic Preservation Zoning Districts of the City.

In-kind features or materials means using architecturally similar material and design to convey the visual appearance of the remaining parts of the feature and finish

Partial demolition a partial demolition for purposes of proposed work on a historic structure or a regulated structure within the City of St. Augustine is considered the permanent removal of 50% of the appraised value or more of historic, individual elements of the building envelope (roof, walls, porches, windows, foundations). It also includes the removal of these historic features regardless of the percentage of the appraised value when they are on visible sides of the building (visible from the street).

Regulated structure is a building or a part of a building that is the subject of a partial demolition and that is not located in the City's Historic Preservation Zoning Districts but meets the following criteria of a Historic structure: It is individually listed as historic locally or nationally, or it is a contributing property in a designated National Register District, or it is a designated historic landmark.

Criteria for Review of a Certificate of Partial Demolition (Section 28-89(2)d.4, CoSA Code of Ordinances)

In the case of partial demolition: the board shall find that the proposed replacement materials including historic materials as well as compatible substitute materials maintain the historic character and integrity of the structure and are compatible with the historic structure's building envelope or the removal will not compromise the overall historic character and integrity of the structure.

Criteria for Regulated Structures (Section 28-89(3), CoSA Code of Ordinances)

Replacement elements for regulated structures as defined in this code will be reviewed consistent with the procedures for architectural feature limited review. The board will apply the adopted design criteria, if any, for the area or AGHP if applicable to the regulated structure. If no design criteria have been adopted, the board will accept evidence and testimony to establish relevant architectural features. Some regulated structures may have architectural features that support its historic character and historic period, as well as modifications or additions over time. The board will accept evidence and testimony to establish whether the architectural features should meet preservation or reconstruction standards.

(Section 28-89(5), CoSA Code of Ordinances) **Applications for partial demolition of buildings listed on the National Register of Historic Places, contributing or potentially contributing to a historic district in the National Register of Historic Places, listed as a local historic landmark pursuant to this Code, listed as a potential landmark identified in the Historic Preservation Element of the Comprehensive Plan, Master Plan or identified by historic preservation planning staff as culturally significant within the recent past,** may apply for the demolition of additional components of the building as part of a more comprehensive rehabilitation plan. Staff may require that the application be reviewed as a full demolition with required documentation, appropriate condition assessment and a rehabilitation plan, recognizing that applicants may encounter unforeseen building damage, site conditions, flood mitigation obstacles, or other significant and demonstrable reasons justifying a more extensive partial demolition as part of the rehabilitation. In issuing a certificate of demolition or partial demolition, the board may include approval of both the partial demolition and potential related additional demolition and its rehabilitated replacement design under one application. This will allow the approval of drawings sufficient for a building permit and that all necessary requirements for the new construction related to the demolition or partial demolition are submitted for permitting review and approval by staff.

~~~~~

The building was built by 1924, is not in a Historic Preservation Zoning District or individually listed on the National Register of Historic Places, but is recorded on the Florida Master Site File and listed as a contributing building in the Lincolnville National Register Historic District. The replacement windows and doors installed do not use in-kind features or materials or match architectural elements of those previously existing.

The requirements for review have been sufficiently met.
~~~~~

UNREASONABLE OR UNDUE ECONOMIC HARDSHIP:
Defined as an onerous and excessive financial burden that would be placed upon a property owner by the denial of a certificate of demolition or a similar burden which would be placed on a property owner by conditions which the Commission seeks to place on the granting of a certificate. (Section 28-2 CoSA Code of Ordinances)
Is applicant entitled to a Certificate of Demolition independent of any hardship? ☐ Yes ☑ No
Did applicant submit evidence of undue economic hardship? ☐ Yes ☑ No

In any instance where an undue economic hardship, as defined in this chapter, is claimed by a property owner, the property owner may submit to the board any or all of the following information before the board makes a decision on the application for certificate of demolition: (Section 28-89(7)b, CoSA Code of Ordinances)

(Materials submitted by applicant noted with a checked box)

- ☐ 1. An estimate of the cost of the proposed construction, alteration, demolition, or removal;
- ☐ 2. The estimated market value of the property in its current condition; after completion of the proposed construction, alteration, demolition, or removal; and, in the case of a proposed demolition, after renovation of the existing property for continued use;
- ☐ 3. In the case of a proposed demolition, an estimate from an architect, developer, licensed contractor, real estate consultant, appraiser, or other real estate professional experienced in rehabilitation as to the economic feasibility of rehabilitation or reuse of the existing structure on the property;
- ☐ 4. The annual gross income from the property for the previous two (2) years; itemized operating and maintenance expenses for the previous two (2) years; and depreciation deduction and annual cash flow before and after debt service, if any, during the same period;
- ☐ 5. The remaining balance on any mortgage or other financing secured by the property and annual debt service, if any, for the previous two (2) years;
- ☐ 6. All appraisals obtained within the previous two (2) years by the owner or applicant in connection with the purchase, financing, or ownership of the property;
- ☐ 7. Any listing of the property for sale or rent, price asked, and offers received, if any, within the previous two (2) years;
- ☐ 8. The assessed value of the property according to the two (2) most recent assessments;
- ☐ 9. The real estate taxes for the previous two (2) years;
- ☐ 10. The form of ownership or operation of the property, whether an individual, sole proprietorship, for profit or not-for-profit corporation, limited partnership, joint venture, or other;

Any other information considered necessary by the board to a determination as to whether the property does yield or may yield a reasonable return to the property owner. The board may require that the property owner furnish such additional information as the board believes is relevant to the board's determination of any alleged undue economic hardship. No decision of the board shall result in undue economic hardship for the property owner. In any case where undue economic hardship is claimed, the board shall make two (2) specific findings. First, the board shall determine if the owner would be entitled to a certificate of demolition without consideration of undue economic hardship. Second, the board shall determine whether the owner demonstrated an undue economic hardship.

Additional information requested by HARB as per above:

LIST OF ATTACHMENTS:

1. Staff Photographs
2. Florida Master Site File surveySanborn Maps
3. Sanborn Maps

Staff Photographs
40 Sanford Street

Front (East) Elevation

Staff Photographs
40 Sanford Street

Staff Photographs
40 Sanford Street

Staff Photographs
40 Sanford Street

Staff Photographs
40 Sanford Street

Staff Photographs
40 Sanford Street

Staff Photographs
40 Sanford Street

Staff Photographs
40 Sanford Street

Staff Report pg. 14

Staff Photographs
40 Sanford Street

Real Estate Listing Photos: Front Elevation

Staff Photographs
40 Sanford Street

Real Estate Listing Photos: Rear Elevation

Staff Report pg. 16

Staff Photographs
40 Sanford Street

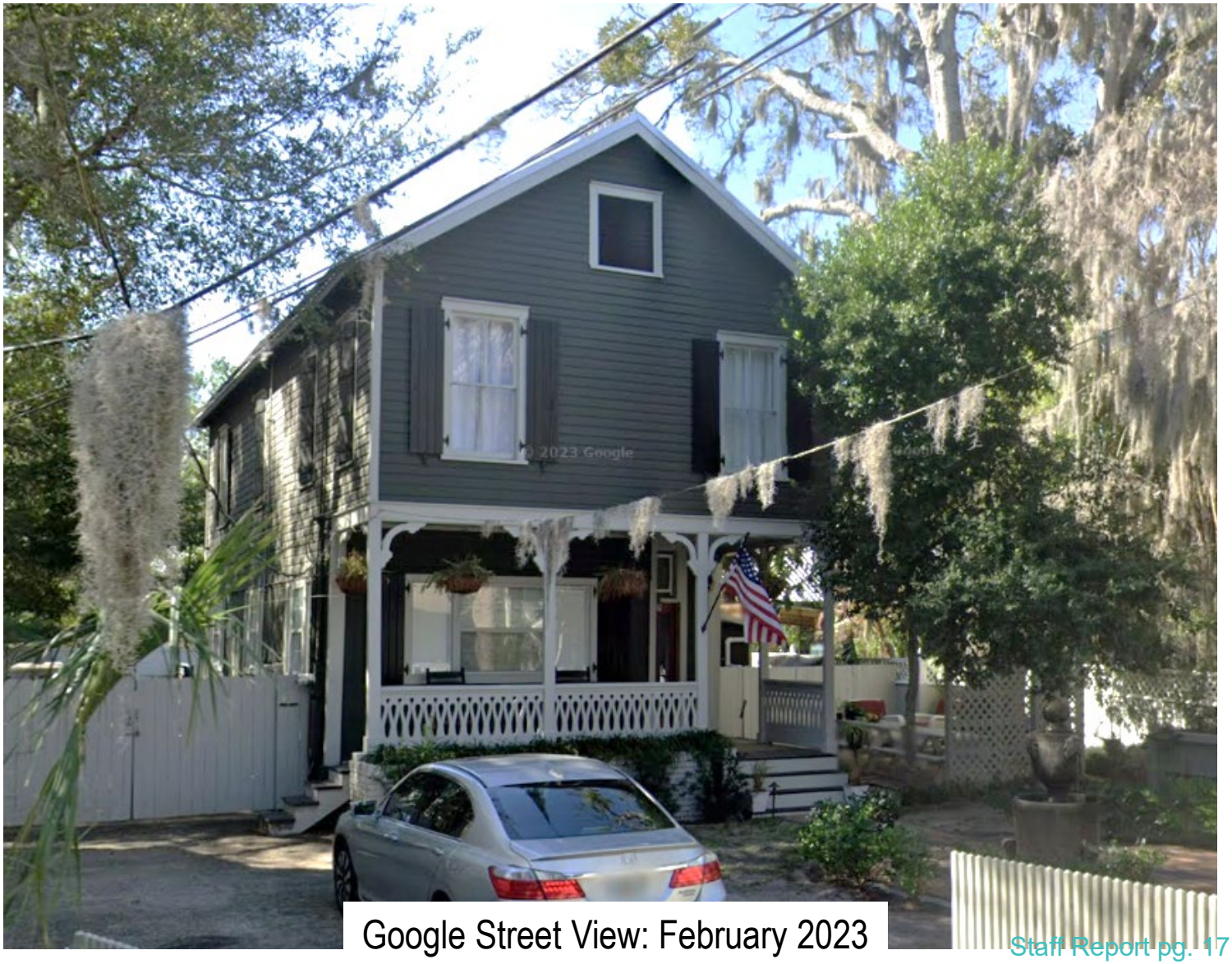

Google Street View: February 2023

FLORIDA MASTER SITE FILE

HISTORIC ST. AUGUSTINE PRESERVATION BOARD

HISTORIC PROPERTIES INVENTORY FORM

I. LOCATION & LEGAL DESCRIPTION

FDAHRM 802== Site No. 8SJ1996 1009==

Site Name: 40 Sanford Street 830== Survey Date: 7807 820==

Address: 40 Sanford Street, St. Augustine, Fla. 32084 905==

Instructions for Locating:

813== County: St. Johns 808==

Location: City of St. Augustine (subdivision) 46G (block) 13 (lot) 868==

multiset ST3248 868==

Owner of Site: Name: Cannon, James D. and Alexis E.;

Address: 40 Sanford Street

St. Augustine, Fla. 32084 902==

Occupant or Manager: 904==

Type of Ownership: Private 848== Zoning: CBD

NR Classification Category: Building 916== Recording Date: 832==

UTM: 17 (zone) 469400 (easting) 3306305 (northing) 890== Location: T07S (T) R30E (R) S18 (S) 812==

Map Reference: USGS St. Augustine 7.5 MIN 1956 (PR 1970) 809==

Recorder: Name & Title: Nolan, David (Historic Sites Specialist);

Address: H.S.A.P.B. 818==

II. SITE DESCRIPTION

Condition of Site:

( ) Excellent 863==

( ) Good 863==

( ) Fair 863==

(x) Deteriorated 863==

Integrity of Site:

(x) Altered 858==

( ) Unaltered 858==

(x) Original Site 858==

( ) Restored - Date: 858==

( ) Moved - Date: 858==

Threats to Site:

( ) Zoning 878==

( ) Development 878==

(x) Deterioration 878==

(x) Borrowing 878==

( ) Transportation 878==

( ) Fill 878==

( ) Dredge 878==

( ) Other 878==

SEE SITE FILE STAFF FOR ORIGINAL PHOTO(S) OR MAP(S)

II. SITE DESCRIPTION, continued.

Original Use: Priv. Residence 838== Present Use: Priv. Residence 850==

Date: C + 1884 844== Period: 19th Cent 845== Culture: American 840==

Architect: 872==

Builder: 874==

Style: Frame vernacular 964==

Plan Type: Rectangular 966==

Exterior Fabrics: Wood, dropsiding, with cornerboards; brick wall, flush siding 854==

Structural Systems: Wood frame 856==

Features of Structure: (942)

Window Type: DHS, 2/2, 2/2 metal, fixed sheet, blinds, attic louver 942==

Foundation: Brick piers 942==

Roof Type: Gable 942==

Secondary Roof Structures: 942==

Porches & Balconies: 2 story L-shaped porch, open on 1st on NE side; 2 one-story porches on N side 942==

Chimney Location: Ridge, offset 942==

Materials: (882)

Chimney: Brick 882==

Roof Surfacing: Metal, corrugated 882==

Ornament Exterior: Jigsawn rafters 882==

Quantitative Data: (950-954)

Chimneys: 1 952== Dormers: 954== Stories: 2 950==

Other: 956==

Surroundings: Residential 864==

Relationship to Surroundings: 859==

III. PHOTOGRAPHY

Photographic Records Numbers: 860==

Contact Prints

IV. SIGNIFICANCE

Areas of Significance: Architecture

920==

Statement of Significance: (911==)

ARCHITECTURE

The two-story Frame Vernacular residence at 40 Sanford Street was constructed ca. 1884 and is one of the oldest houses built in this neighborhood. It has been extensively altered over the years and all that remains of the Victorian trim are the jigsawn rafters. Formerly having a two-story L-shaped porch on the front and two one-story porches on the north side, all that is left is a carport on the south side of this house. The house has also been damaged by fire in recent years. On the front now is a brick porch wall with square wood posts.

The area roughly bounded by Central Avenue, Bridge, Riberia and Cedar Streets is one of St. Augustine's consistant late 19th century Victorian neighborhoods. It includes houses on both small and large scales, and is notable for the fact that, except along Riberia Street, there is no later development in the area to clash with the Victorian buildings. There is a problem, however, of the modernization of older buildings out of harmony with their origins. The area was adjacent to the great Victorian sawmills along Riberia Street. It provided a home for some of the pioneer Victorian builders of St. Augustine and some of the houses show their handiwork in interesting gingerbread patterns. There is a row of Victorian duplex townhouses on Weeden Street unlike anything else in the city. There is some problem of housing deterioration in the area, though several houses have also been fixed up in recent years. The division of some of the houses into apartments has created population density and parking problems. There is also traffic pressure from Bridge and Riberia Streets. It is a tree-shaded neighborhood within walking distance from downtown and with a view of the San Sebastian River.

HISTORY

This neighborhood evolved out of the late 18th century Spanish land grant to Pedro Garcia, a local tavern owner, who developed his property into one of the first commercial orange groves in Florida. The southern limit of the tract, Bridge Street, was a colonial thoroughfare leading to one of three late 18th century ferry crossings across the San Sebastian River.(1) Frederick Weeden, mayor of St. Augustine in 1835 who also served as Osceola's physician, acquired the grove in 1835 and built the family homestead in the

(over)

V. BIBLIOGRAPHY

1. Mariano de la Rocque, "Plano General de la Plaza de San Agustin de la Florida", December 24, 1791; Benjamin Clements, "Plan of the City of St. Augustine, 1834-35"; Biographical File, St. Augustine Historical Society.

2. St. Johns County Court House, Deed Records, Book L, p. 139; Book P, pp. 441, 447, 457, 464, 476; Book R, pp. 68, 69, 75; Book S, p. 364; Book Z, p. 352; 1885 and 1894 Birds-Eye View of St. Augustine; See Dumas Tract, Blocks A-E; Biographical File, SAHS.

southwest corner. Benjamin Putnam, major in the Seminole War, two-time mayor and local magistrate, bought "Weeden's Grove" in 1855, but the property was confiscated by Union occupation forces in 1863. John Hay, Abraham Lincoln's secretary and later U. S. Secretary of State, bought the tract for speculative purposes in 1864 and Henry Sanford bought it three years later. Sanford, a former American minister to Belgium, was Florida's most prominent land developer before the arrival of Henry Flagler. He founded the central Florida community of the same name and established the British-based Florida Land and Colonization Company, Ltd., in 1880 in order to promote his extensive real estate holdings in the state. "Fountain City," as the tract was called, was developed over the next fifteen years and became one of the most densely populated late 19th century neighborhoods outside the old city area. Development along Sanford and Weeden Streets south of Bridge Street was within Dumas Tract Subdivision and was promoted by local realtor, J. H. Slater, a decade later.(2)

☐ Original
☒ Update

HISTORICAL STRUCTURE FORM
FLORIDA MASTER SITE FILE
Version 5.0 3/19

Site#8 SJ01996
Field Date 11-20-2020
Form Date 1-1-2020
Recorder # MAS

Shaded Fields represent the minimum acceptable level of documentation.
Consult the *Guide to Historical Structure Forms* for detailed instructions.

Site Name(s) (address if none) 40 Sanford Street — Multiple Listing (DHR only) ____
Survey Project Name St. Augustine Historic Resource Survey Update — Survey # (DHR only) ____
National Register Category (please check one) ☒building ☐structure ☐district ☐site ☐object
Ownership: ☐private-profit ☐private-nonprofit ☒private-individual ☐private-nonspecific ☐city ☐county ☐state ☐federal ☐Native American ☐foreign ☐unknown

LOCATION & MAPPING

	Street Number	Direction	Street Name	Street Type	Suffix Direction
Address:	40		Sanford	Street	

Cross Streets (nearest / between) ____
USGS 7.5 Map Name ST. AUGUSTINE — USGS Date 1992 — Plat or Other Map ____
City / Town (within 3 miles) St. Augustine — In City Limits? ☒yes ☐no ☐unknown — County St. Johns
Township 7N — Range 18W — Section 105 — ¼ section: ☐NW ☐SW ☐SE ☐NE — Irregular-name: ____
Tax Parcel # 2028800000 — Landgrant ____
Subdivision Name City of St. Augustine — Block ____ — Lot ____
UTM Coordinates: Zone ☐16 ☐17 Easting ☐☐☐☐☐☐ Northing ☐☐☐☐☐☐☐
Other Coordinates: X: ____ Y: ____ Coordinate System & Datum ____
Name of Public Tract (e.g., park) ____

HISTORY

Construction Year: 1884 ☐approximately ☐year listed or earlier ☐year listed or later
Original Use: Private Residence (House/Cottage/Ca — From (year): 1884 — To (year): 2020
Current Use: Private Residence (House/Cottage/Ca — From (year): 1884 — To (year): 2020
Other Use ____ — From (year): ____ — To (year): ____
Moves: ☐yes ☒no ☐unknown Date: ____ Original address ____
Alterations: ☒yes ☐no ☐unknown Date: ____ Nature: windows
Additions: ☒yes ☐no ☐unknown Date: ____ Nature: side rear shed addns
Architect (last name first): ____ Builder (last name first): ____
Ownership History (especially original owner, dates, profession, etc.)

Druckenmiller Eleanor Hobson Etal

Is the Resource Affected by a Local Preservation Ordinance? ☒yes ☐no ☐unknown Describe Demolition Review

DESCRIPTION

Style: Frame Vernacular — Exterior Plan: Rectangular — Number of Stories: 2
Exterior Fabric(s): 1. Drop siding 2. Wood/Plywood 3. ____
Roof Type(s): 1. Gable 2. ____ 3. ____
Roof Material(s): 1. Sheet metal:3V crimp 2. ____ 3. ____
Roof secondary strucs. (dormers etc.) 1. ____ 2. ____

Windows (types, materials, etc.)

8/8 replacement sash flanked by fixed single light, replacement sash at side, operable shutters, wood frames

Distinguishing Architectural Features (exterior or interior ornaments)

end facing gable w slight overhang, sculpted roof edge, recessed 1st floor, drop siding at 2nd floor, vertical siding at 1st, vent in gable end

Ancillary Features / Outbuildings (record outbuildings, major landscape features; use continuation sheet if needed.)

near rear of parcel, wood fence, brick planter wall, metal fountain

DHR USE ONLY	OFFICIAL EVALUATION	DHR USE ONLY
NR List Date ____ ☐Owner Objection	SHPO – Appears to meet criteria for NR listing: ☐yes ☐no ☐insufficient info — Date ____ Init. ____ KEEPER – Determined eligible: ☐yes ☐no — Date ____ NR Criteria for Evaluation: ☐a ☐b ☐c ☐d (see *National Register Bulletin 15*, p. 2)	

HISTORICAL STRUCTURE FORM

Site #8 SJ01996

DESCRIPTION (continued)

Chimney: No. 0 Chimney Material(s): 1. _____ 2. _____
Structural System(s): 1. Wood frame 2. _____ 3. _____
Foundation Type(s): 1. Unknown 2. _____
Foundation Material(s): 1. Obscured 2. _____
Main Entrance (stylistic details)

at corner, deeper recess, solid core multi light, divided sidelight

Porch Descriptions (types, locations, roof types, etc.)

recessed under 2nd story, deeper recess at corner, engaged brick planter wall, square piers w decorative brackets

Condition (overall resource condition): ☐excellent ☒good ☐fair ☐deteriorated ☐ruinous
Narrative Description of Resource

This 1884 Frame Vernacular style building is 2 stories with Drop siding exterior and a Gable roof. It appears to be in good condition.

Archaeological Remains _____ ☐Check if Archaeological Form Completed

RESEARCH METHODS (select all that apply)

☒FMSF record search (sites/surveys) ☒library research ☐building permits ☒Sanborn maps
☒FL State Archives/photo collection ☐city directory ☐occupant/owner interview ☒plat maps
☒property appraiser / tax records ☐newspaper files ☐neighbor interview ☐Public Lands Survey (DEP)
☒cultural resource survey (CRAS) ☒historic photos ☐interior inspection ☐HABS/HAER record search
☒other methods (describe) City Staff

Bibliographic References (give FMSF manuscript # if relevant, use continuation sheet if needed)

OPINION OF RESOURCE SIGNIFICANCE

Appears to meet the criteria for National Register listing individually? ☐yes ☒no ☐insufficient information
Appears to meet the criteria for National Register listing as part of a district? ☒yes ☐no ☐insufficient information
Explanation of Evaluation (required, whether significant or not; use separate sheet if needed)

No known architectural features or associations to meet individual criteria for listing; although it appears to meet criteria to be a contributing building within the district.

Area(s) of Historical Significance (see *National Register Bulletin 15*, p. 8 for categories: e.g. "architecture", "ethnic heritage", "community planning & development", etc.)
1. Architecture 3. _____ 5. _____
2. _____ 4. _____ 6. _____

DOCUMENTATION

Accessible Documentation Not Filed with the Site File - including field notes, analysis notes, photos, plans and other important documents

1) Document type _____ Maintaining organization _____
Document description _____ File or accession #'s _____

2) Document type _____ Maintaining organization _____
Document description _____ File or accession #'s _____

RECORDER INFORMATION

Recorder Name Patricia Davenport-Jacobs Affiliation Environmental Services, Inc.
Recorder Contact Information 7254 Financial Way, Suite 100, Jacksonville, FL 32256/9044702200/9044702112/:
(address / phone / fax / e-mail)

Required Attachments

❶ USGS 7.5' MAP WITH STRUCTURE LOCATION CLEARLY INDICATED
❷ LARGE SCALE STREET, PLAT OR PARCEL MAP (available from most property appraiser web sites)
❸ PHOTO OF MAIN FACADE, DIGITAL IMAGE FILE
When submitting an image, it must be included in digital AND hard copy format (plain paper grayscale acceptable). Digital image must be at least 1600 x 1200 pixels, 24-bit color, jpeg or tiff.

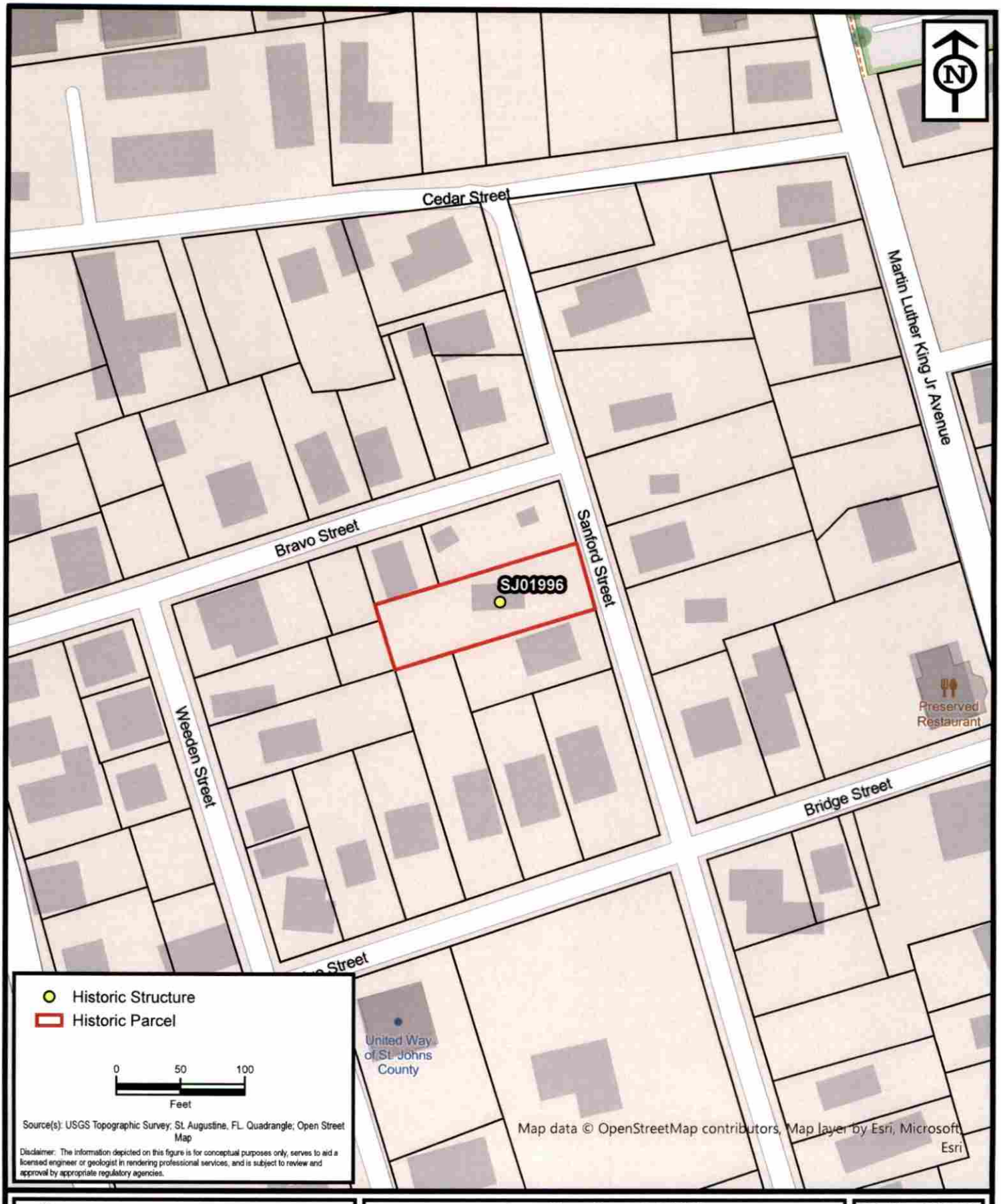

ENVIRONMENTAL SERVICES, INC.
A Terracon COMPANY
7220 FINANCIAL WAY, SUITE 100 JACKSONVILLE, FL 32256
PH. (904) 470-2200 FAX (904) 470-2112

Parcel Location - SJ01996

St. Augustine Historic Resource Mitigation & Survey Update

St. Johns County, Florida

Project No.	HK207093
Date	Jan 2021
Drawn By	AA
Checked By	JRN
Approved By	PDJ
Figure No.	**2**

Path: N:\GIS\Projects\2020\HK Jacksonville\HK207093_StAugResourceMitigation\Maps\HK207093_StAugResourceMitigation\HK207093_StAugResourceMitigation.aprx Date: 1/10/2021 12:21 PM

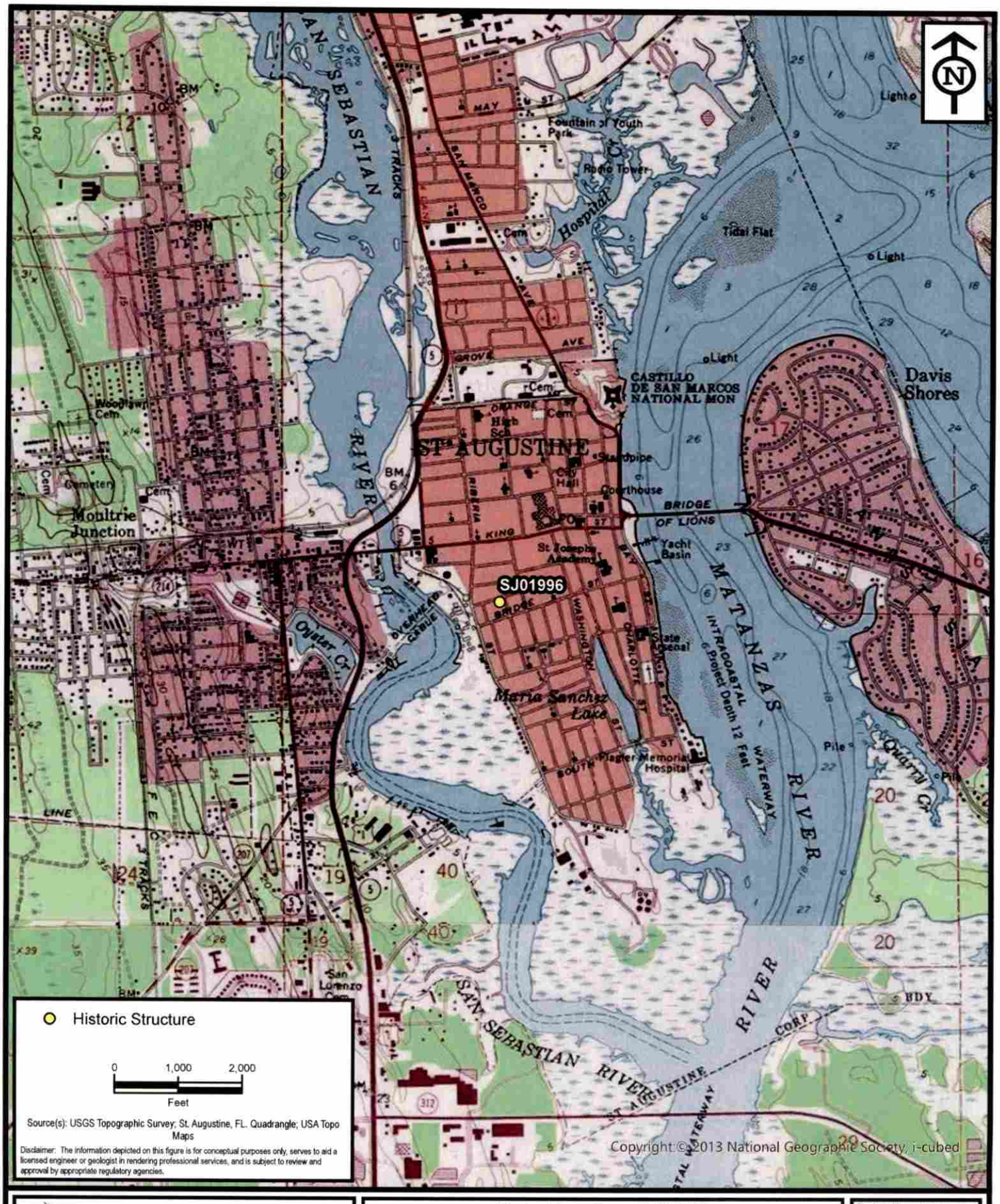

ENVIRONMENTAL SERVICES, INC.
A Terracon COMPANY
7220 FINANCIAL WAY, SUITE 100 JACKSONVILLE, FL 32256
PH. (904) 470-2200 FAX (904) 470-2112

Project Location - SJ01996

St. Augustine Historic Resource Mitigation & Survey Update

St. Johns County, Florida

Project No.	HK207093
Date	Jan 2021
Drawn By	AA
Checked By	JRN
Approved By	PDJ
Figure No.	1

Path: N:\GIS\Projects\2020\HK Jacksonville\HK207093_StAugResourceMitigation\Maps\HK207093_StAugResourceMitigation\HK207093_StAugResourceMitigation.aprx Date: 1/10/2021 12:21 PM

KODAK SAFETY FILM 5062

40

SANBORN MAPS
40 Sanford Street

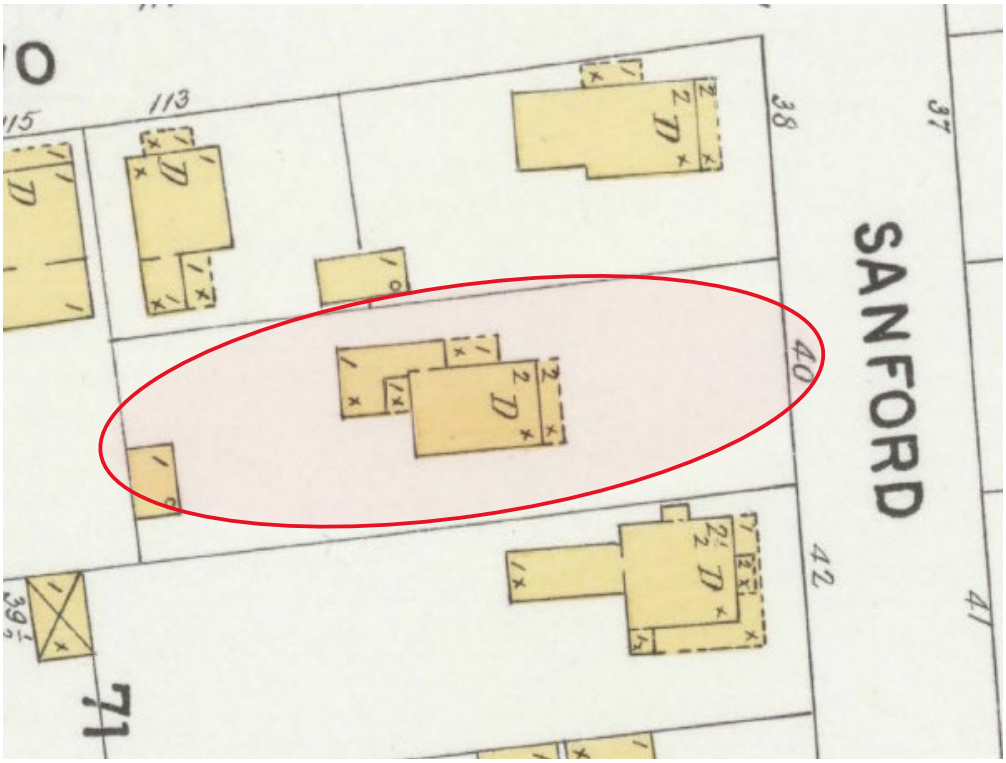

1899

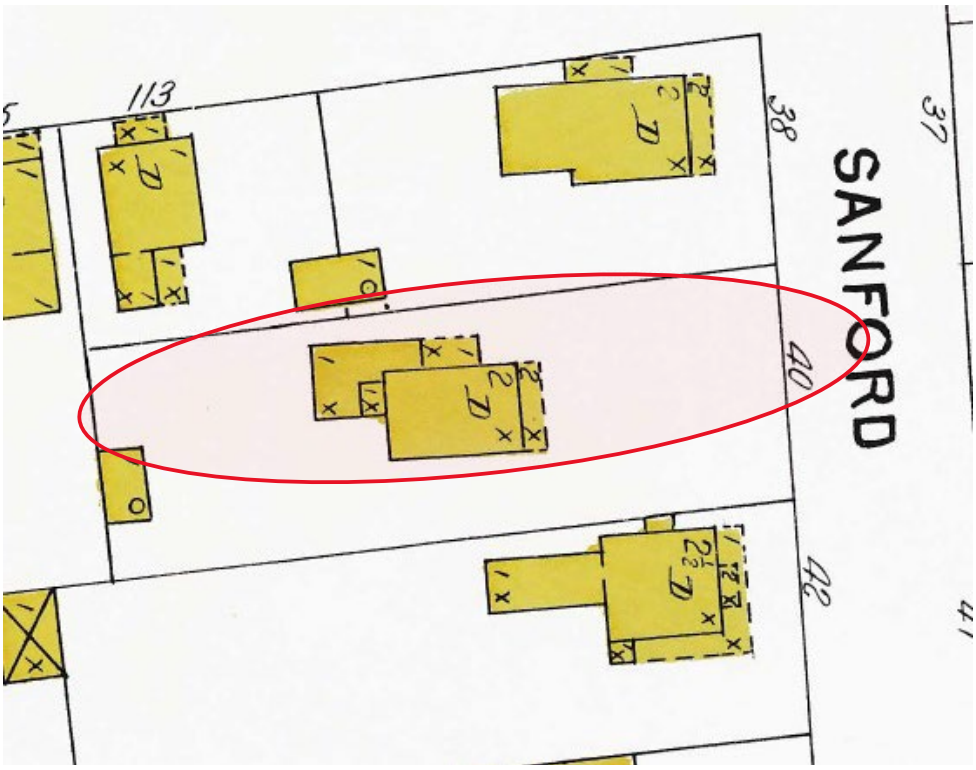

1904

SANBORN MAPS
40 Sanford Street

1910

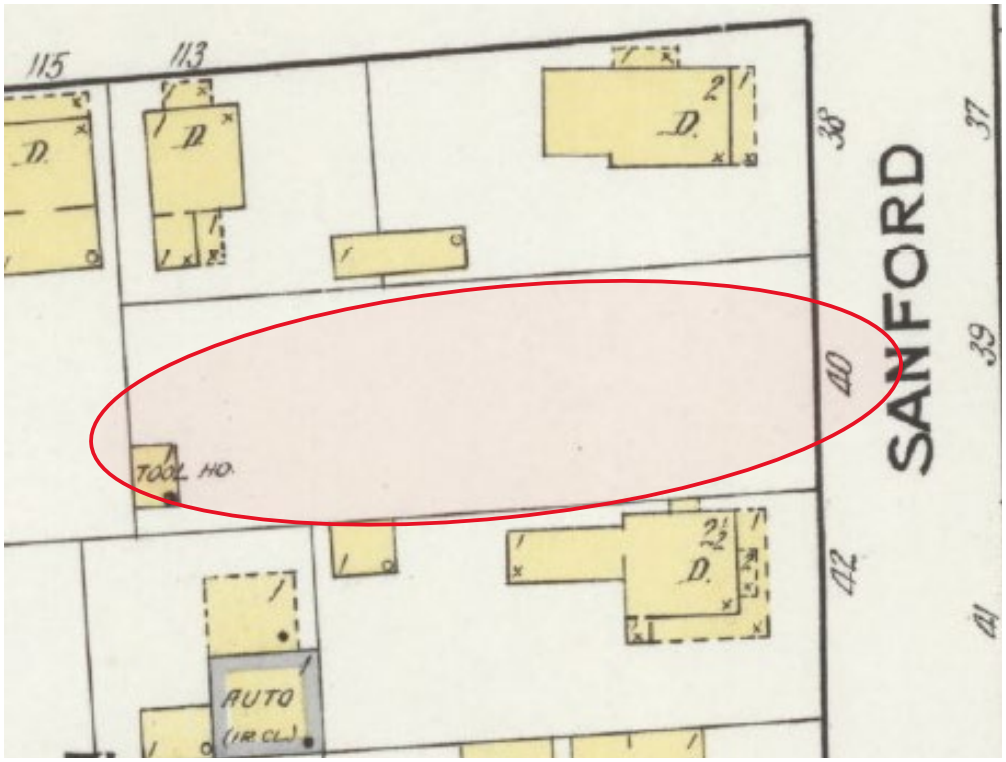

1917

SANBORN MAPS
40 Sanford Street

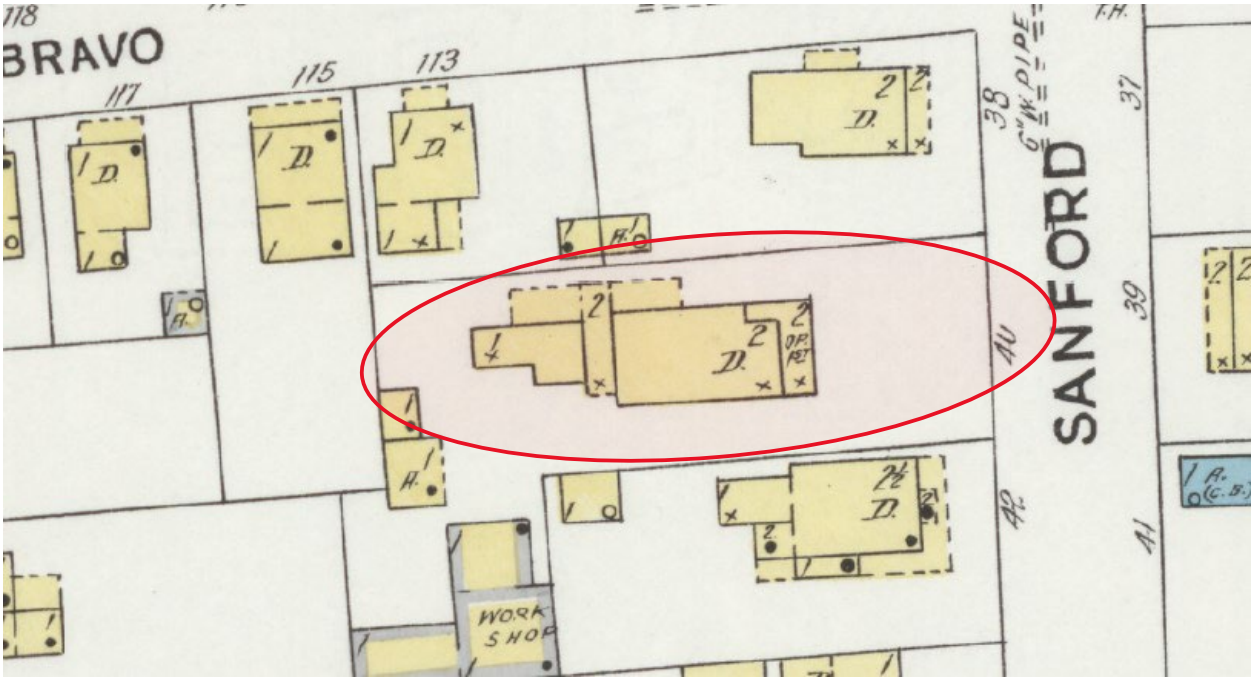

1924

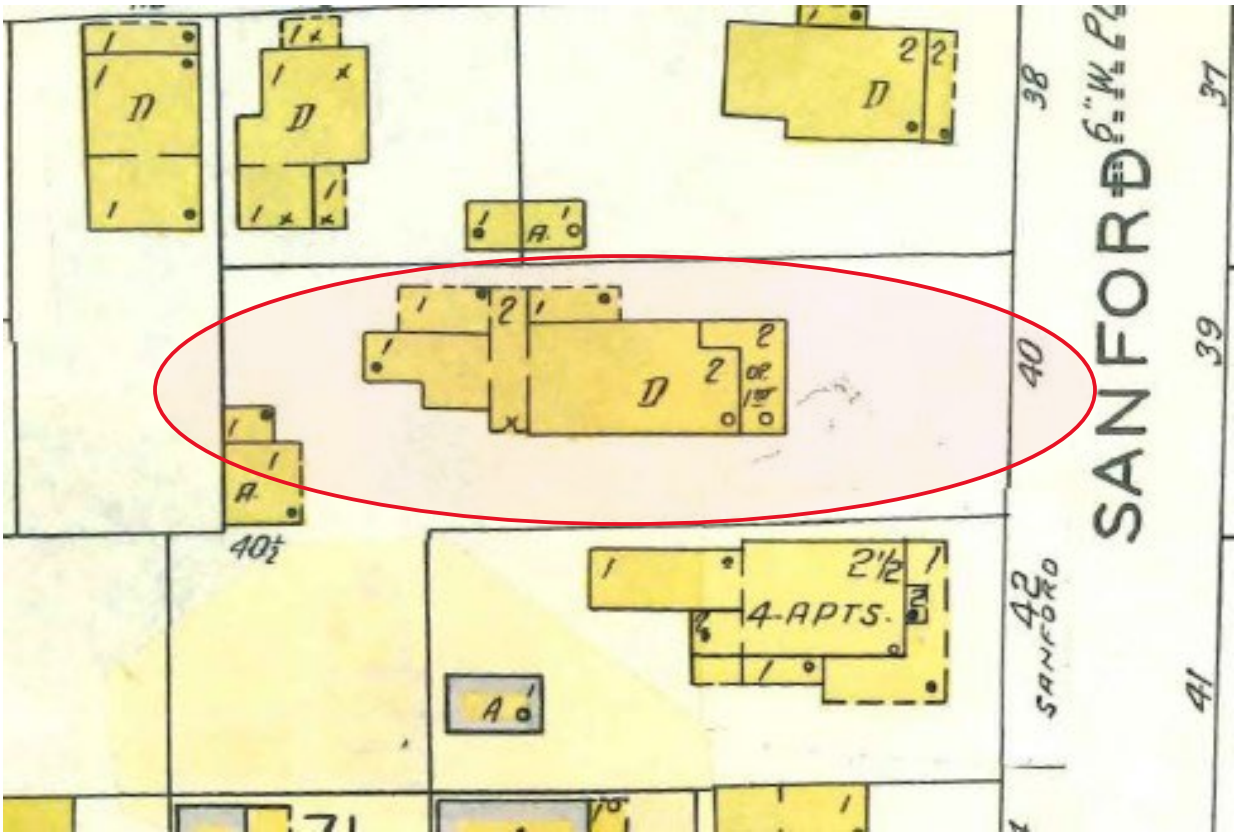

1930 updated to 1960

CITY OF ST. AUGUSTINE
HISTORIC ARCHITECTURAL REVIEW BOARD APPLICATION

Certificate of Demolition (Partial)

Case Number: HP2025-0048 **Meeting Date: Tuesday, July 15, 2025**

1. NAME OF APPLICANT: Justin Shaw
   Business (if applicable): New South Windows
   Address: 8590 Philips Highway
   City: Jacksonville State: FL Zip Code: 32257
   Daytime Telephone: 9047175400 E-Mail Address: jaxpermitting@newsouthwindow.com

2. NAME OF PROPERTY OWNER: Clevenstine Woods Joint Trust
   Business (if applicable):
   Address: 40 Sanford Street
   City: St Augustine State: FL Zip Code: 32086
   Daytime Telephone: E-Mail Address:

3. PROJECT LOCATION: 40 Sanford St, Saint Augustine, FL, 32084

4. LEGAL DESCRIPTION: CITY OF ST AUG LOT 13 BLK 46-G OR6123/578

5. SCOPE OF WORK: For after-the-fact wholesale replacement of windows with a different material and design

Information attached by applicant includes:

- Application Agreement
- Window Condition Assessment
- Numbered Floor Plans
- Photographs of Previously Existing Conditions
- Proposed Replacement Building/Feature Drawings

Received 6/3/2025
Planning & Building Department

HARB APPLICATION AGREEMENT

In filling out this application:

- **I understand that it becomes part of the Public Record of the City of St. Augustine and hereby certify that all information contained herein is accurate to the best of my knowledge.**
- **I further understand that if this application is for an *Opinion of Appropriateness*, I must still obtain a *Certificate of Appropriateness* before applicable permits can be issued for project work to begin. If this application is for a *Certificate of Appropriateness, Demolition*, or *Partial Demolition*, and it is approved, I am required to obtain other development approvals, archaeological review, and a building permit as necessary prior to starting project work.**
- **Once a hearing date has been set and a legal notice has been published or posted, I, or an authorized representative, must be prepared to present the request at the scheduled hearing date. The cost of subsequent hearings requiring re-noticing due to continuance will be assessed to the applicant.**
- **I have been made aware that applications must be sufficiently complete at the time of submittal or may be delayed to a future meeting. Relevant information necessary for application review shall include but not be limited to the items referenced in the "Plan Requirements" section of the Architectural Guidelines for Historic Preservation (AGHP) depending on the scope and scale of the project. The minimum application requirements are marked as required submittal documents in this online application. Contact Planning Staff if the project is unique and needs to be addressed in a different manner. Minor details may be submitted in the portal up to 10 days before the meeting and HARB will determine if additional materials may be presented at the meeting.**

All applicants/owners of record must sign the application agreement. If the property applicant/owner is a governmental agency; licensed business or company; incorporated organization; or an administered estate, an authorized agent may sign. If the applicant is different than the property owner, the application must be signed by both parties. An Authorization Form signed by the property owner(s) and notarized, must be submitted only in the absence of the property owner's signature or where an authorized agent signs in lieu of the property owner.

Project Address: 40 Sanford Street

Applicant's Name: Justin Shaw Applicant's Signature: _____

Owner's Name: TYLER WOODS Owner's Signature: _____

Owner's Name: CHRISTINE CLEVENSTINE Owner's Signature: _____

Owner's Name: _____ Owner's Signature: _____

(Can add additional signature page if needed)

Florida Statute 286.0105 states that a person appealing any decision by this board at any meeting regarding this application may need a verbatim record of the proceedings which includes testimony and evidence upon which the appeal is to be based.

Received 6/3/2025
Planning & Building Department

Property Address:
Applicant Name:

Assessment Date:
Assessed by:

Window Assessment - Window Condition Report

Window #	List and Describe Window Condition	Window #	List and Describe Window Condition
1	Front Window Fair	21	Master Bath - Bad
2	Left Side - Fair	22	Master - Front - Bad
3	Left Side middle - Fair	23	
4	Left Side back - Fair	24	
5	Back - Lower - Fair	25	
6	Back - Lower - Fair (Landry)	26	
7	Kitchen - Fair	27	
8	Bath - bad	28	
9	Bath - ok	29	
10	Master - Front Fair	30	
11	Fair	31	
12	Fair	32	
13	Bedrooms 1 & 2 Fair	33	
14	ok	34	
15	ok	35	
16	Landing - ok	36	
17	Bath ok	37	
18	ok	38	
19	ok	39	
20	Landing - Side - Fair	40	

Received 6/3/2025
Planning & Building Department

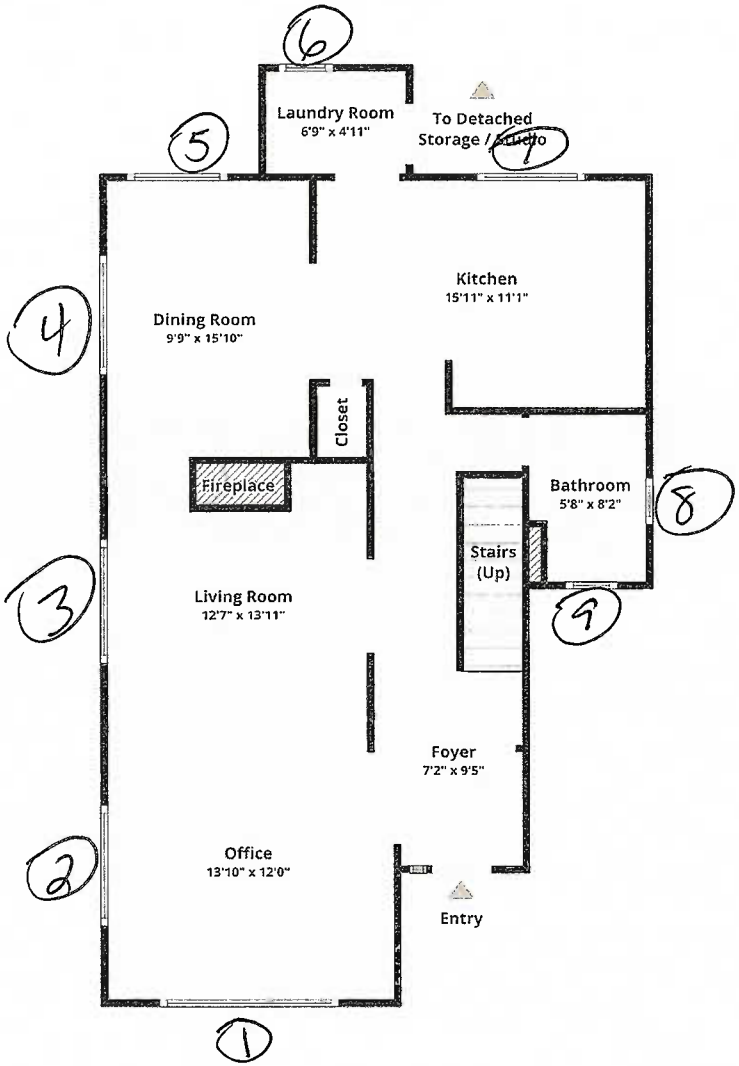

40 Sanford St Saint Augustine, FL 32084

Floor 1

Floor plans/tour cannot be used for building or design purposes. Sizes and dimensions are approximate.

Sold: $935,000 (3 beds, 3 baths, 2,064 Square Feet)

Received 6/3/2025
Planning & Building Department

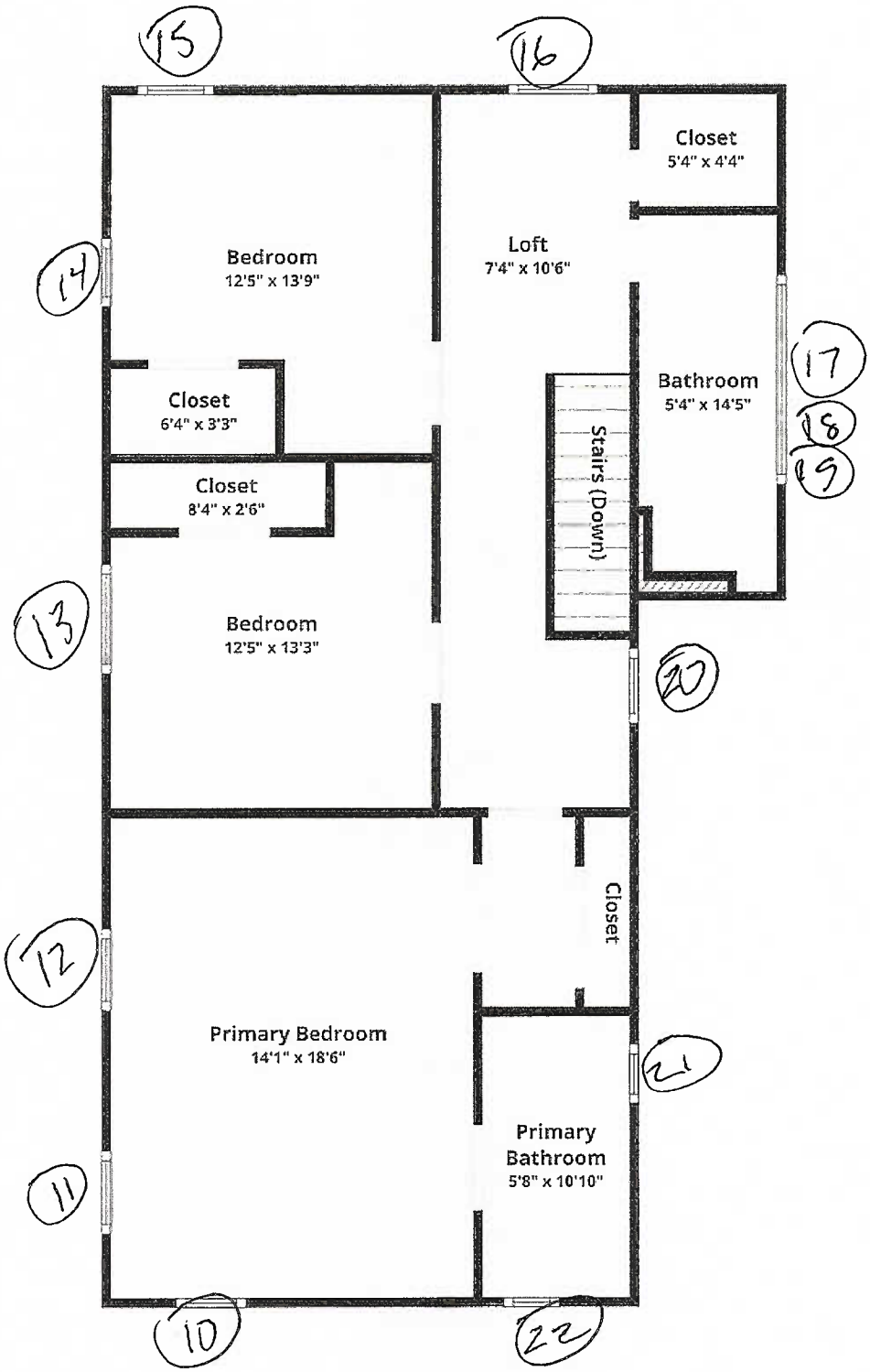

Floor plans/tour cannot be used for building or design purposes. Sizes and dimensions are approximate.

Sold: $935,000 (3 beds, 3 baths, 2,064 Square Feet)

Received 6/3/2025
Planning & Building Department

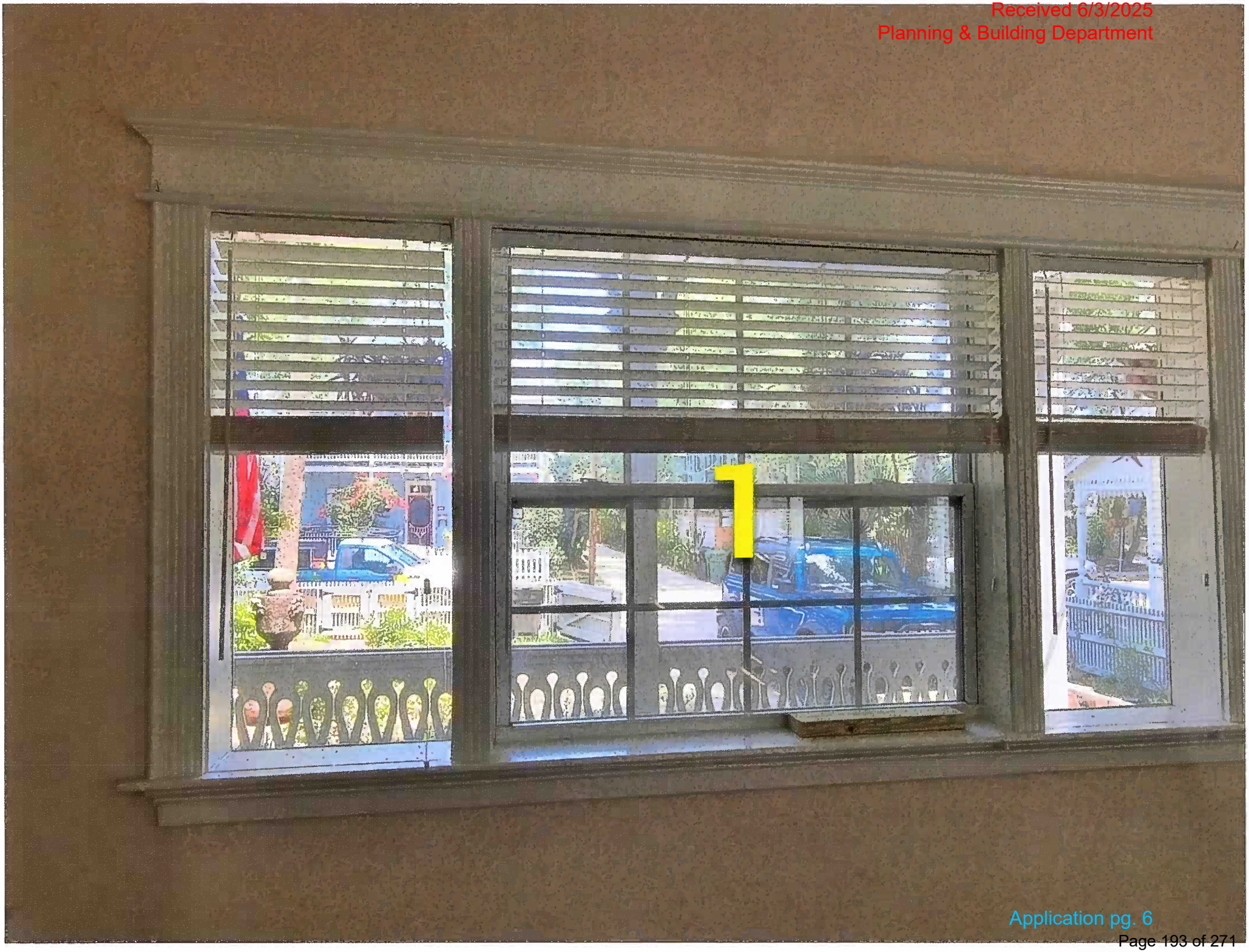

Received 6/3/2025
Planning & Building Department

Received 6/3/2025
Planning & Building Department

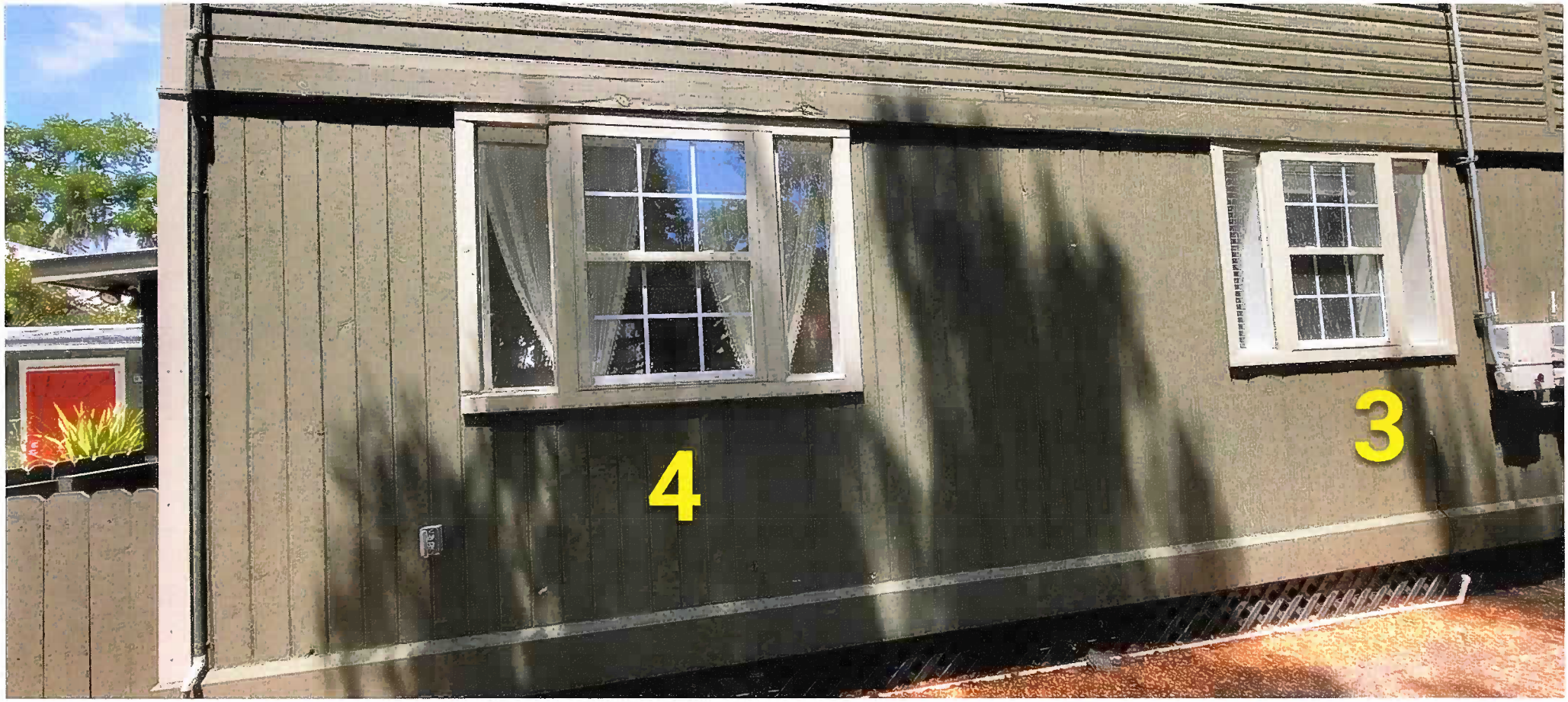

Received 6/3/2025
Planning & Building Department

Received 6/3/2025
Planning & Building Department

Received 6/3/2025
Planning & Building Department

Received 6/3/2025
Planning & Building Department

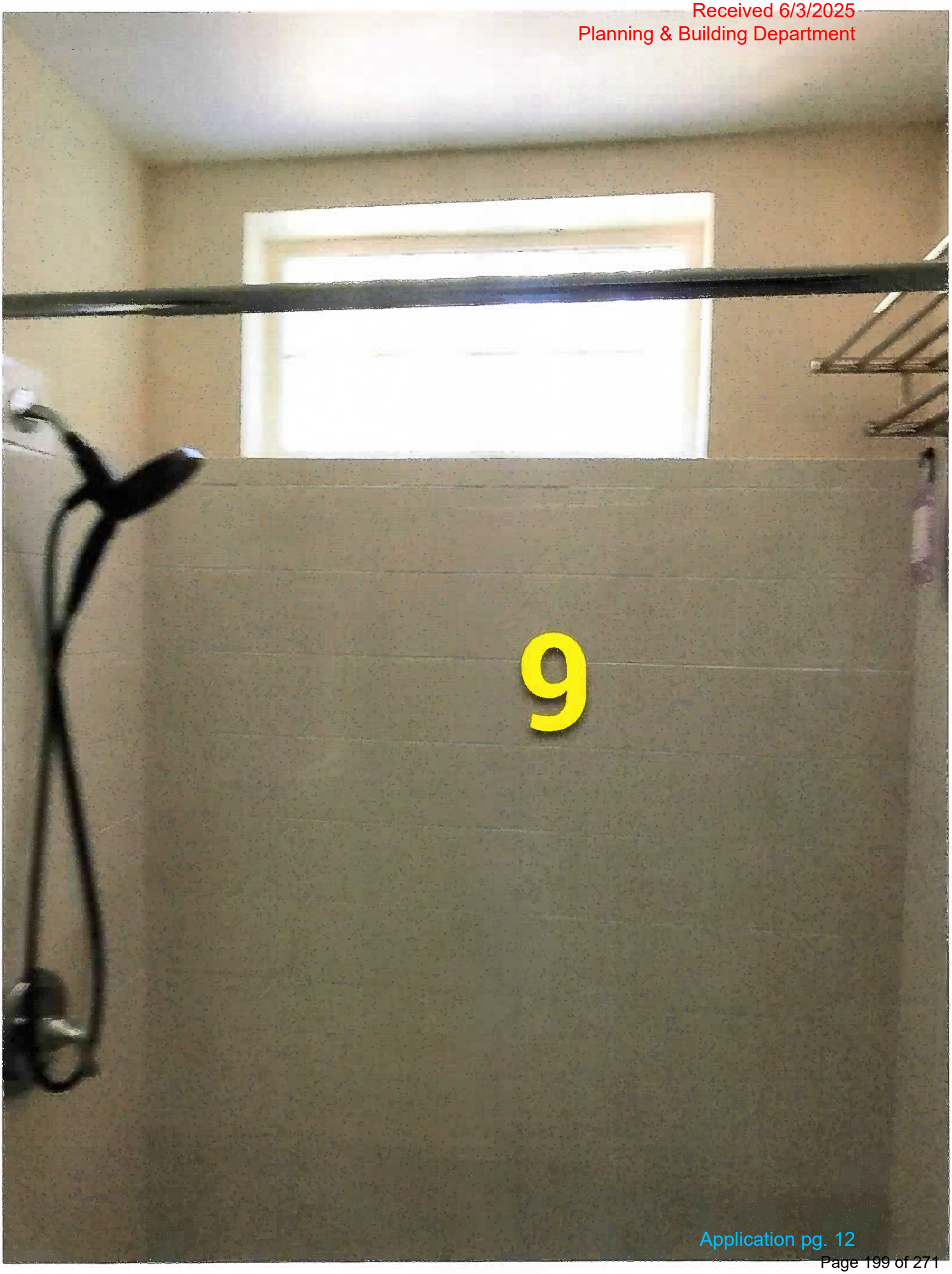

Received 6/3/2025
Planning & Building Department

Received 6/3/2025
Planning & Building Department

Received 6/3/2025
Planning & Building Department

Received 6/3/2025
Planning & Building Department

Received 6/3/2025
Planning & Building Department

Received 6/3/2025
Planning & Building Department

Received 6/3/2025
Planning & Building Department

Received 6/3/2025
Planning & Building Department

REVISIONS			
REV	DESCRIPTION	DATE	APPROVED
D	REVISED TO MODIFY PRODUCT'S NAME	08/29/2024	R.L.

NOTES:

1. THE PRODUCT SHOWN HEREIN IS DESIGNED AND MANUFACTURED TO COMPLY WITH REQUIREMENTS OF THE FLORIDA BUILDING CODE.
2. WOOD FRAMING, METAL STRUCTURE AND MASONRY OPENING TO BE DESIGNED AND ANCHORED TO PROPERLY TRANSFER ALL LOADS TO STRUCTURE. FRAMING AND MASONRY OPENING IS THE RESPONSIBILITY OF THE ARCHITECT OR ENGINEER OF RECORD.
3. WHERE SHIM OR BUCK THICKNESS IS LESS THAN 1–1/2" WINDOW UNITS MUST BE ANCHORED THROUGH THE FRAME IN ACCORDANCE WITH MANUFACTURER'S PUBLISHED INSTALLATION INSTRUCTIONS. ANCHORS SHALL BE SECURELY FASTENED DIRECTLY INTO MASONRY, CONCRETE OR OTHER STRUCTURAL SUBSTRATE MATERIAL.
4. WHERE WOOD BUCK THICKNESS IS 1–1/2" OR GREATER, BUCK SHALL BE SECURELY FASTENED TO MASONRY, CONCRETE OR OTHER STRUCTURAL SUBSTRATE. WINDOW UNITS MAY BE ANCHORED THROUGH FRAME TO SECURED WOOD BUCK IN ACCORDANCE WITH MANUFACTURER'S PUBLISHED INSTALLATION INSTRUCTIONS.
5. WHERE 1X BUCK IS NOT USED DISSIMILAR MATERIALS MUST BE SEPARATED WITH APPROVED COATING OR MEMBRANE. SELECTION OF COATING OR MEMBRANE IS THE RESPONSIBILITY OF THE ARCHITECT OR ENGINEER OF RECORD.
6. BUCKS SHALL EXTEND BEYOND WINDOW INTERIOR FACE SO THAT FULL FRAME SUPPORT IS PROVIDED.
7. SHIM AS REQUIRED AT EACH ANCHOR LOCATION WITH LOAD BEARING SHIM. SHIM WHERE SPACE OF 1/16" OR GREATER OCCURS. MAXIMUM ALLOWABLE SHIM STACK TO BE 1/4".
8. SHIMS SHALL BE LOCATED, APPLIED AND MADE FROM MATERIALS AND THICKNESS CAPABLE OF SUSTAINING APPLICABLE LOADS.
9. WIND LOAD DURATION FACTOR Cd=1.6 WAS USED FOR WOOD ANCHOR CALCULATIONS.
10. FRAME MATERIAL: EXTRUDED RIGID PVC.
11. UNITS MUST BE GLAZED PER ASTM E1300.
12. APPROVED IMPACT PROTECTIVE SYSTEM <u>IS REQUIRED</u> FOR THIS PRODUCT IN WIND BORNE DEBRIS REGIONS.
13. FOR ANCHORING THROUGH FIN INTO WOOD FRAMING OR 2X BUCK USE #6 WOOD SCREWS WITH SUFFICIENT LENGTH TO ACHIEVE A 1 1/2" MINIMUM EMBEDMENT INTO SUBSTRATE. LOCATE ANCHORS AS SHOWN IN ELEVATIONS AND INSTALLATION DETAILS.
14. FOR ANCHORING THROUGH FIN INTO METAL STRUCTURE USE #6 SMS OR SELF DRILLING SCREWS WITH SUFFICIENT LENGTH TO ACHIEVE 3 THREADS MINIMUM BEYOND STRUCTURE INTERIOR WALL. LOCATE ANCHORS AS SHOWN IN ELEVATIONS AND INSTALLATION DETAILS.
15. FOR ANCHORING THROUGH FRAME INTO WOOD FRAMING OR 2X BUCK USE #8 OR #10 WOOD SCREWS WITH SUFFICIENT LENGTH TO ACHIEVE A 1 1/4" MINIMUM EMBEDMENT INTO SUBSTRATE. LOCATE ANCHORS AS SHOWN IN ELEVATIONS AND INSTALLATION DETAILS.
16. FOR ANCHORING THROUGH FRAME INTO MASONRY/CONCRETE USE 3/16" OR 1/4" TAPCONS WITH SUFFICIENT LENGTH TO ACHIEVE A 1 1/4" MINIMUM EMBEDMENT INTO SUBSTRATE WITH 2'' MINIMUM EDGE DISTANCE. LOCATE ANCHORS AS SHOWN IN ELEVATIONS AND INSTALLATION DETAILS.
17. FOR ANCHORING THROUGH FRAME INTO METAL STRUCTURE USE #8 OR #10 SMS OR SELF DRILLING SCREWS WITH SUFFICIENT LENGTH TO ACHIEVE 3 THREADS MINIMUM BEYOND STRUCTURE INTERIOR WALL. LOCATE ANCHORS AS SHOWN IN ELEVATIONS AND INSTALLATION DETAILS.
18. ALL FASTENERS TO BE CORROSION RESISTANT.
19. INSTALLATION ANCHORS SHALL BE INSTALLED IN ACCORDANCE WITH ANCHOR MANUFACTURER'S INSTALLATION INSTRUCTIONS AND ANCHORS SHALL NOT BE USED IN SUBSTRATES WITH STRENGTHS LESS THAN THE MINIMUM STRENGTH SPECIFIED BELOW:
    - 19.1. WOOD: MINIMUM SPECIFIC GRAVITY OF G=0.42
    - 19.2. CONCRETE: MINIMUM COMPRESSIVE STRENGTH OF 2,000 PSI.
    - 19.3. MASONRY: HOLLOW/FILLED BLOCK PER ASTM C90 WITH Fm=2,000PSI MINIMUM.
    - 19.4. METAL STRUCTURE: STEEL 18GA (.048") FY=33KSI/FU=52KSI OR ALUMINUM 6063–T5 FU=30KSI 1/8" THICK MINIMUM

SIGNED: 08/29/2024

TABLE OF CONTENTS

SHEET NO.	DESCRIPTION
1	NOTES
2 – 4	ELEVATIONS
5 – 15	INSTALLATION DETAILS
16	COMPONENTS

MI WINDOWS AND DOORS LLC
650 WEST MARKET STREET
GRATZ, PA 17030

SERIES 1620/1621 SH REINFORCED
NON–IMPACT 37" x 72"
NOTES

DRAWN:	DWG NO.	REV
A.R.	08–03159	D

SCALE NTS | DATE 08/16/17 | SHEET 1 OF 16

L. ROBERTO LOMAS P.E.
208 7th Ave, INDIALANTIC, FL 32903
434-688-0609 rllomas@lrlomaspe.com

LUIS R. LOMAS LICENSE No. 62514 STATE OF FLORIDA PROFESSIONAL ENGINEER

Luis R. Lomas P.E.
FL No.: 62514

REVISIONS			
REV	DESCRIPTION	DATE	APPROVED
D	REVISED TO MODIFY PRODUCT'S NAME	08/29/2024	R.L.

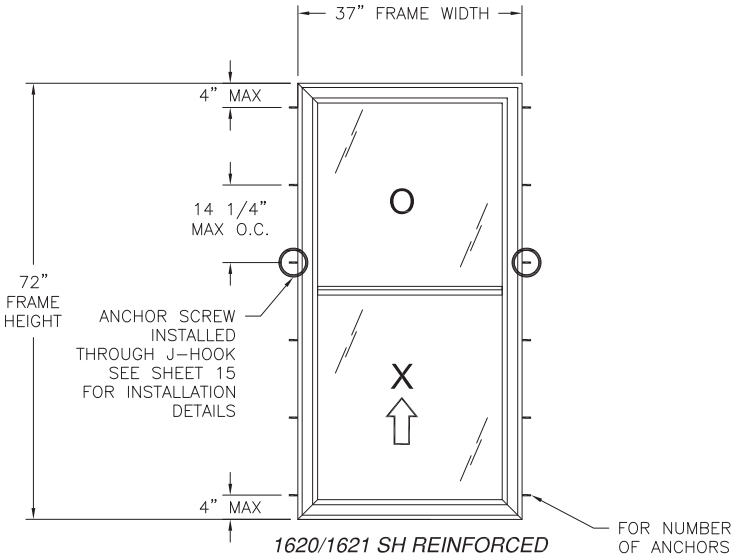

1620/1621 SH REINFORCED RECTANGULAR
EXTERIOR VIEW
FINLESS & FLANGE INSTALLATION
WITH #8 ANCHOR AND 3/16" TAPCON

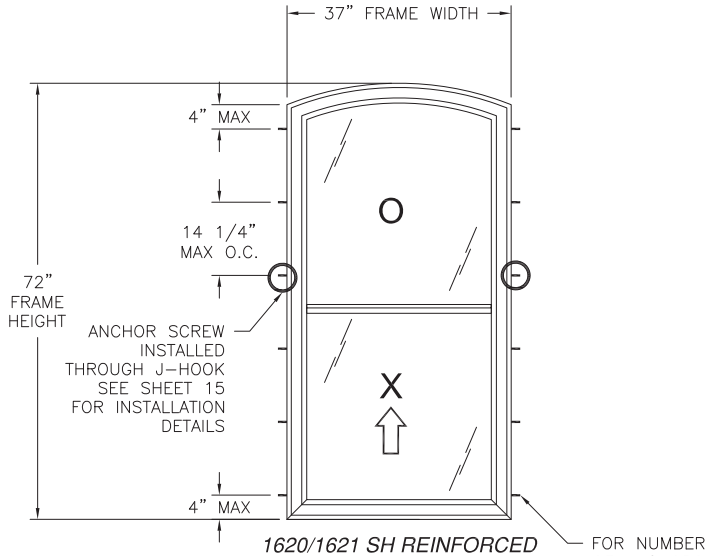

1620/1621 SH REINFORCED DESIGNER
EXTERIOR VIEW
FINLESS & FLANGE INSTALLATION
WITH #8 ANCHOR AND 316"TAPCON

CHART #1

Number of anchor locations required			
Frame Height (in)	Frame Width (in)		
	24.00 Jamb	30.00 Jamb	37.00 Jamb
24.00	3	3	3
30.00	3	3	3
36.00	3	3	3
42.00	4	4	4
48.00	4	4	4
54.00	5	5	5
60.00	5	5	5
66.00	6	6	6
72.00	6	6	6

DESIGN PRESSURE RATING	IMPACT RATING
+50.0/-67.0PSF	NONE

37" X 72" UNIT SHOWN. OTHER SIZES APPROVED AS LONG AS FRAME AREA DOES NOT EXCEED 18.5" FT²

SIGNED: 08/29/2024

NOTES:
1. *SASH SIZE: 34 1/8" X 35 1/2"*
2. *D.L.O.: 32 3/8" X 32 1/4"*

HARDWARE SCHEDULE	
A.	(2) RECESSED CAM LOCK 7" FROM STILES AT SASH INTERIOR MEETING RAIL
B.	(2) METAL PIVOT BAR IN CORNERS OF STILES AND BOTTOM RAIL
C.	(2) SURFACE MOUNTED TILT LATCH AT CORNERS OF STILES AND INTERIOR MEETING RAIL
D.	(4) METAL COIL BALANCES AT SASH TRACK OF JAMB
E.	ALUMINUM REINFORCEMENT (M-2266) AT STILES
F.	ALUMINUM REINFORCEMENT (M-2115) AT LOCK RAIL
G.	ALUMINUM REINFORCEMENT (AE-000162) AT FIXED MEETING RAIL

MI WINDOWS AND DOORS LLC
650 WEST MARKET STREET
GRATZ, PA 17030

SERIES 1620/1621 SH REINFORCED
NON-IMPACT 37" x 72"
FINLESS & FLANGE ELEVATIONS

DRAWN: A.R.	DWG NO. 08-03159	REV D
SCALE NTS	DATE 08/16/17	SHEET 2 OF 16

L. ROBERTO LOMAS P.E.
208 7th Ave, INDIALANTIC, FL 32903
434-688-0609 rllomas@lrlomaspe.com

LUIS R. LOMAS LICENSE No. 62514 STATE OF FLORIDA PROFESSIONAL ENGINEER

Luis R. Lomas P.E.
FL No.: 62514

REVISIONS			
REV	DESCRIPTION	DATE	APPROVED
D	REVISED TO MODIFY PRODUCT'S NAME	08/29/2024	R.L.

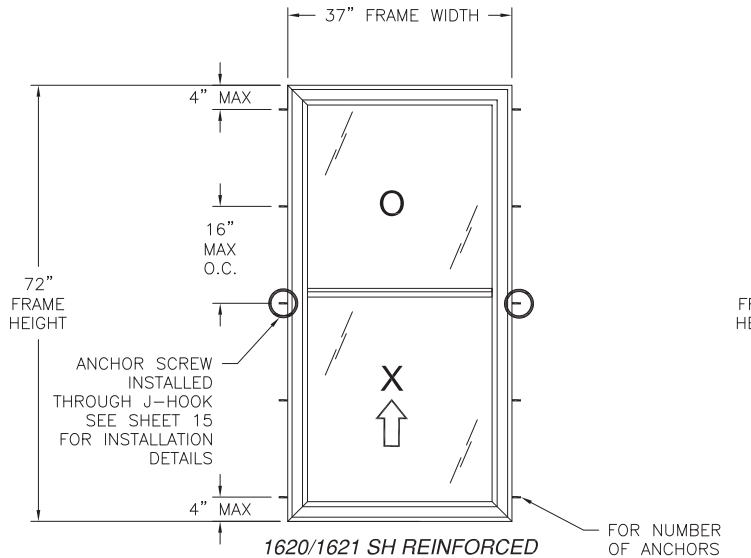

1620/1621 SH REINFORCED RECTANGULAR
EXTERIOR VIEW
FINLESS & FLANGE INSTALLATION
WITH #10 ANCHOR AND 1/4" TAPCON

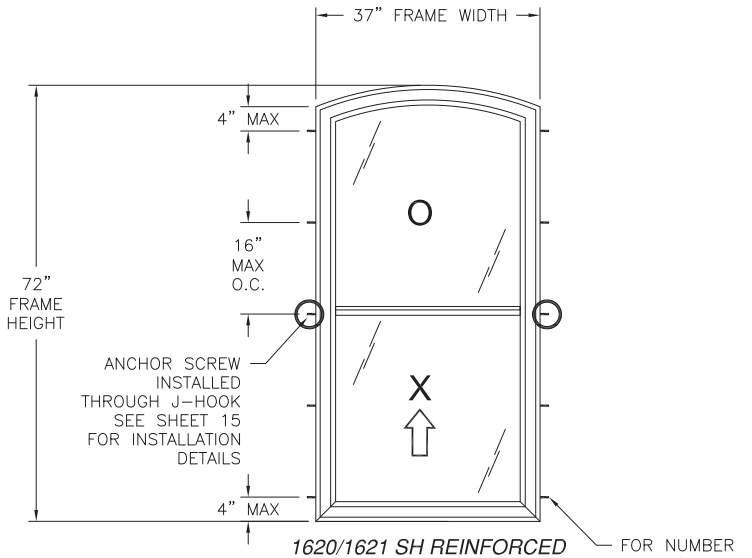

1620/1621 SH REINFORCED DESIGNER
EXTERIOR VIEW
FINLESS & FLANGE INSTALLATION
WITH #10 ANCHOR AND 1/4" TAPCON

CHART #2

Number of anchor locations required			
Frame Height (in)	Frame Width (in)		
	24.00	*30.00*	*37.00*
	Jamb	*Jamb*	*Jamb*
24.00	2	2	2
30.00	3	3	3
36.00	3	3	3
42.00	4	4	4
48.00	4	4	4
54.00	4	4	4
60.00	5	5	5
66.00	5	5	5
72.00	5	5	5

DESIGN PRESSURE RATING	*IMPACT RATING*
+50.0/-67.0PSF	*NONE*

37" X 72" UNIT SHOWN. OTHER SIZES APPROVED AS LONG AS FRAME AREA DOES NOT EXCEED 18.5" FT²

SIGNED: 08/29/2024

NOTES:
1. *SASH SIZE: 34 1/8" X 35 1/2"*
2. *D.L.O.: 32 3/8" X 32 1/4"*

HARDWARE SCHEDULE	
A.	(2) RECESSED CAM LOCK 7" FROM STILES AT SASH INTERIOR MEETING RAIL
B.	(2) METAL PIVOT BAR IN CORNERS OF STILES AND BOTTOM RAIL
C.	(2) SURFACE MOUNTED TILT LATCH AT CORNERS OF STILES AND INTERIOR MEETING RAIL
D.	(4) METAL COIL BALANCES AT SASH TRACK OF JAMB
E.	ALUMINUM REINFORCEMENT (M-2266) AT STILES
F.	ALUMINUM REINFORCEMENT (M-2115) AT LOCK RAIL
G.	ALUMINUM REINFORCEMENT (AE-000162) AT FIXED MEETING RAIL

MI WINDOWS AND DOORS LLC
650 WEST MARKET STREET
GRATZ, PA 17030

SERIES 1620/1621 SH REINFORCED
NON-IMPACT 37" x 72"
FINLESS & FLANGE ELEVATIONS

DRAWN: A.R.	DWG NO. 08-03159	REV D
SCALE NTS	DATE 08/16/17	SHEET 3 OF 16

L. ROBERTO LOMAS P.E.
208 7th Ave, INDIALANTIC, FL 32903
434-688-0609 rllomas@lrlomaspe.com

LUIS R. LOMAS LICENSE No. 62514 STATE OF FLORIDA PROFESSIONAL ENGINEER

Luis R. Lomas P.E.
FL No.: 62514

REVISIONS			
REV	DESCRIPTION	DATE	APPROVED
D	REVISED TO MODIFY PRODUCT'S NAME	08/29/2024	R.L.

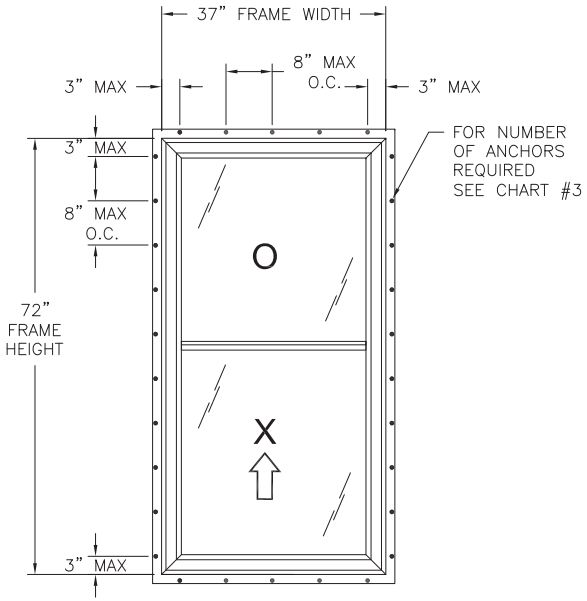

1620/1621 SH REINFORCED RECTANGULAR
EXTERIOR VIEW
FIN INSTALLATION

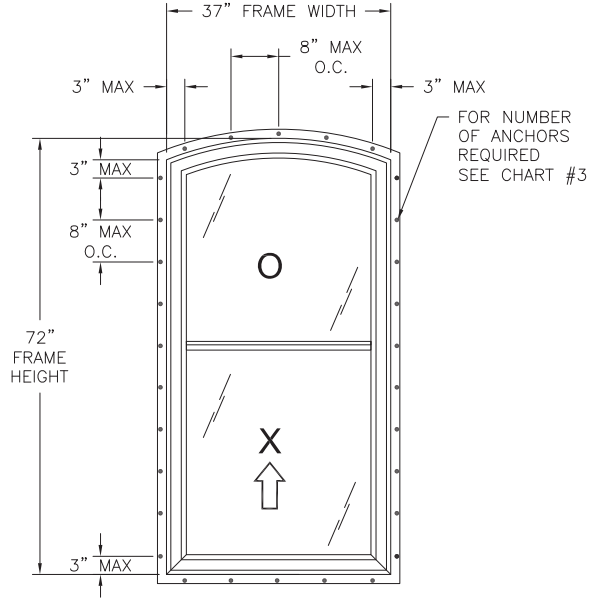

1620/1621 SH REINFORCED DESIGNER
EXTERIOR VIEW
FIN INSTALLATION

CHART #3

Number of anchor locations required						
Frame Height (in)	Frame Width (in)					
	24.00		30.00		37.00	
	H & S	Jamb	H & S	Jamb	H & S	Jamb
24.00	4	4	4	4	5	4
30.00	4	4	4	4	5	4
36.00	4	5	4	5	5	5
42.00	4	6	4	6	5	6
48.00	4	7	4	7	5	7
54.00	4	7	4	7	5	7
60.00	4	8	4	8	5	8
66.00	4	9	4	9	5	9
72.00	4	10	4	10	5	10

DESIGN PRESSURE RATING	IMPACT RATING
+50.0/-67.0PSF	NONE

37" X 72" UNIT SHOWN. OTHER SIZES APPROVED AS LONG AS FRAME AREA DOES NOT EXCEED 18.5" FT²

SIGNED: 08/29/2024

NOTES:
1. *SASH SIZE: 34 1/8" X 35 1/2"*
2. *D.L.O.: 32 3/8" X 32 1/4"*

HARDWARE SCHEDULE	
A.	(2) RECESSED CAM LOCK 7" FROM STILES AT SASH INTERIOR MEETING RAIL
B.	(2) METAL PIVOT BAR IN CORNERS OF STILES AND BOTTOM RAIL
C.	(2) SURFACE MOUNTED TILT LATCH AT CORNERS OF STILES AND INTERIOR MEETING RAIL
D.	(4) METAL COIL BALANCES AT SASH TRACK OF JAMB
E.	ALUMINUM REINFORCEMENT (M-2266) AT STILES
F.	ALUMINUM REINFORCEMENT (M-2115) AT LOCK RAIL
G.	ALUMINUM REINFORCEMENT (AE-000162) AT FIXED MEETING RAIL

MI WINDOWS AND DOORS LLC
650 WEST MARKET STREET
GRATZ, PA 17030

SERIES 1620/1621 SH REINFORCED
NON-IMPACT 37" x 72"
FIN ELEVATIONS

DRAWN: A.R.	DWG NO. 08-03159	REV D
SCALE NTS	DATE 08/16/17	SHEET 4 OF 16

L. ROBERTO LOMAS P.E.
208 7th Ave, INDIALANTIC, FL 32903
434-688-0609 rllomas@lrlomaspe.com

LUIS R. LOMAS LICENSE No. 62514 STATE OF FLORIDA PROFESSIONAL ENGINEER

Luis R. Lomas P.E.
FL No.: 62514

REVISIONS			
REV	DESCRIPTION	DATE	APPROVED
D	REVISED TO MODIFY PRODUCT'S NAME	08/29/2024	R.L.

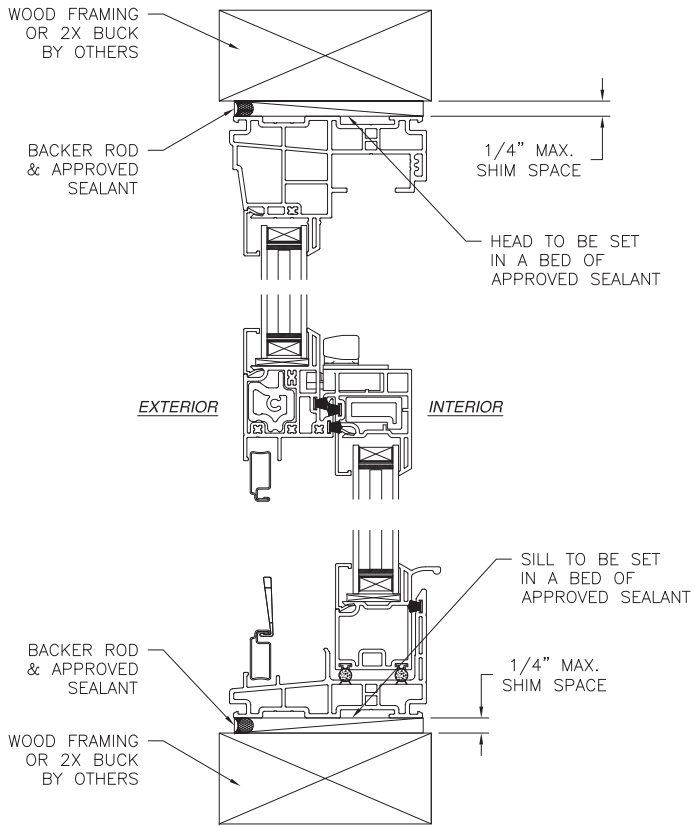

VERTICAL CROSS SECTION
WOOD FRAMING OR 2X BUCK INSTALLATION

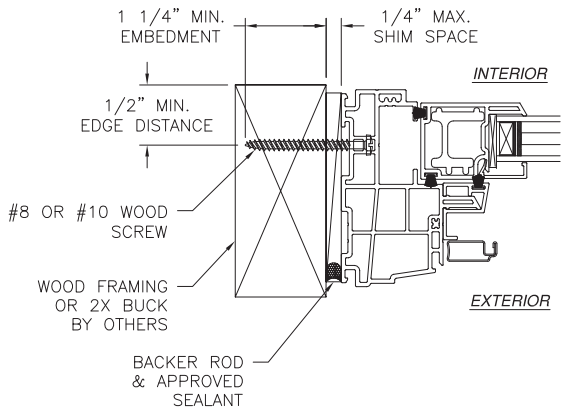

JAMB INSTALLATION DETAIL
WOOD FRAMING OR 2X BUCK INSTALLATION

NOTES:
1. *INTERIOR AND EXTERIOR FINISHES, BY OTHERS, NOT SHOWN FOR CLARITY.*
2. *PERIMETER AND JOINT SEALANT BY OTHERS TO BE DESIGNED IN ACCORDANCE WITH ASTM E2112*

SIGNED: 08/29/2024

MI WINDOWS AND DOORS LLC
650 WEST MARKET STREET
GRATZ, PA 17030

SERIES 1620/1621 SH REINFORCED
NON–IMPACT 37" x 72"
FINLESS INSTALLATION DETAILS

DRAWN:	DWG NO.	REV
A.R.	08–03159	D

SCALE	DATE	SHEET
NTS	08/16/17	5 OF 16

L. ROBERTO LOMAS P.E.
208 7th Ave, INDIALANTIC, FL 32903
434-688-0609 rllomas@lrlomaspe.com

LUIS R. LOMAS LICENSE No. 62514 STATE OF FLORIDA PROFESSIONAL ENGINEER

Luis R. Lomas P.E.
FL No.: 62514

REVISIONS			
REV	DESCRIPTION	DATE	APPROVED
D	REVISED TO MODIFY PRODUCT'S NAME	08/29/2024	R.L.

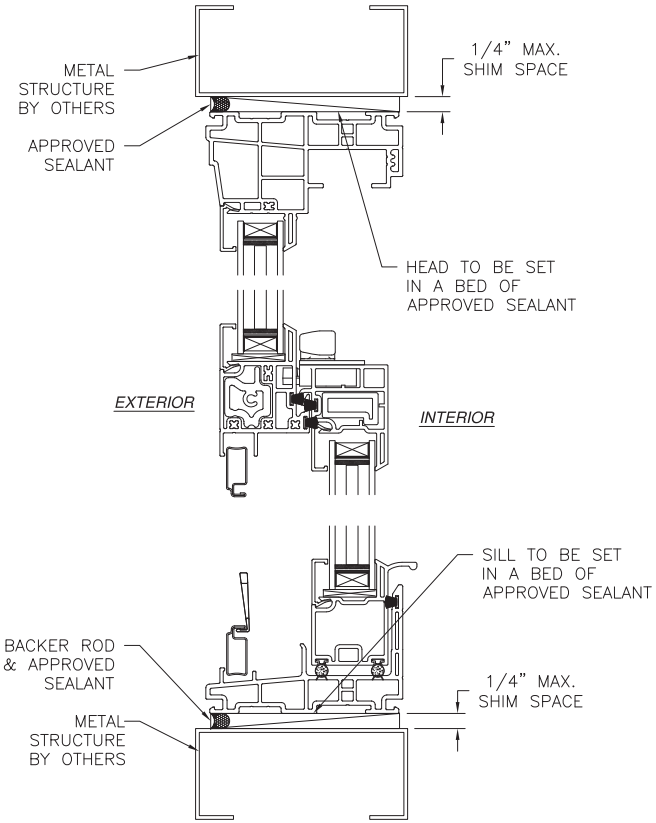

VERTICAL CROSS SECTION
METAL STRUCTURE INSTALLATION

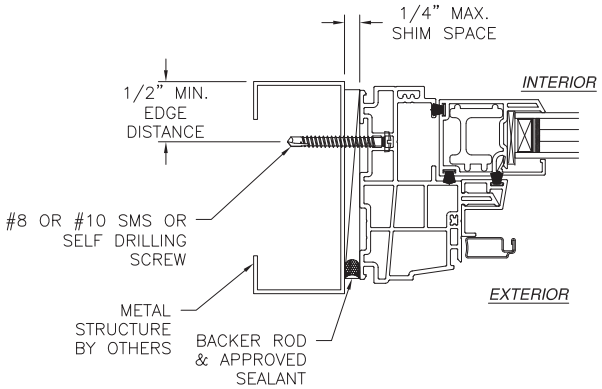

JAMB INSTALLATION DETAIL
METAL STRUCTURE INSTALLATION

NOTES:
1. *INTERIOR AND EXTERIOR FINISHES, BY OTHERS, NOT SHOWN FOR CLARITY.*
2. *PERIMETER AND JOINT SEALANT BY OTHERS TO BE DESIGNED IN ACCORDANCE WITH ASTM E2112*

SIGNED: 08/29/2024

MI WINDOWS AND DOORS LLC
650 WEST MARKET STREET
GRATZ, PA 17030

SERIES 1620/1621 SH REINFORCED
NON-IMPACT 37" x 72"
FINLESS INSTALLATION DETAILS

DRAWN:	DWG NO.	REV
A.R.	08-03159	D

SCALE	DATE	SHEET
NTS	08/16/17	6 OF 16

L. ROBERTO LOMAS P.E.
208 7th Ave, INDIALANTIC, FL 32903
434-688-0609 rllomas@lrlomaspe.com

LUIS R. LOMAS LICENSE No. 62514 STATE OF FLORIDA PROFESSIONAL ENGINEER

Luis R. Lomas P.E.
FL No.: 62514

REVISIONS			
REV	DESCRIPTION	DATE	APPROVED
D	REVISED TO MODIFY PRODUCT'S NAME	08/29/2024	R.L.

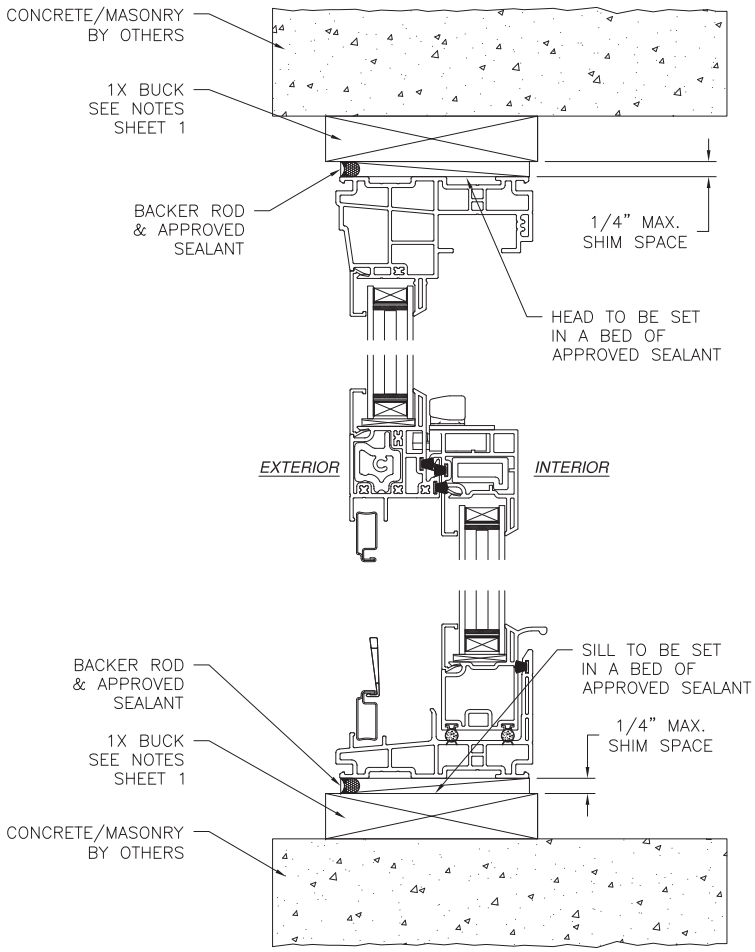

VERTICAL CROSS SECTION
CONCRETE/MASONRY INSTALLATION

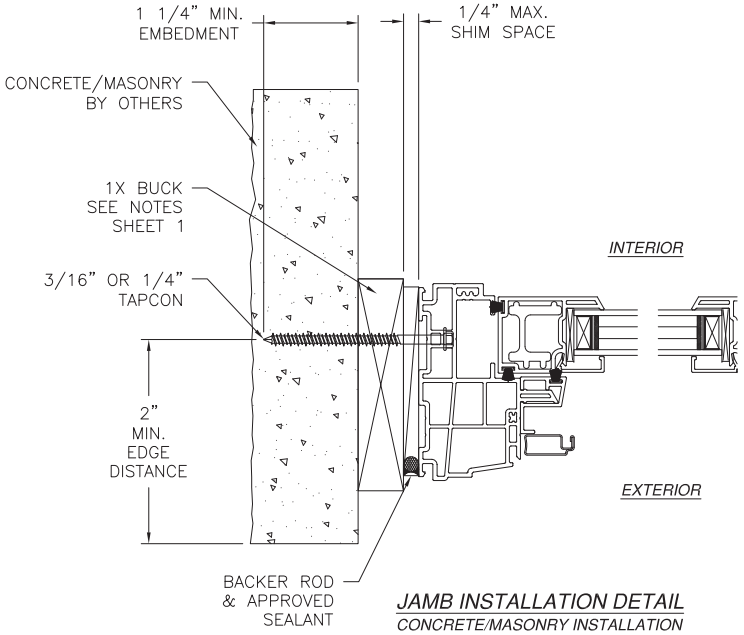

JAMB INSTALLATION DETAIL
CONCRETE/MASONRY INSTALLATION

NOTES:
1. *INTERIOR AND EXTERIOR FINISHES, BY OTHERS, NOT SHOWN FOR CLARITY.*
2. *PERIMETER AND JOINT SEALANT BY OTHERS TO BE DESIGNED IN ACCORDANCE WITH ASTM E2112*

SIGNED: 08/29/2024

MI WINDOWS AND DOORS LLC
650 WEST MARKET STREET
GRATZ, PA 17030

SERIES 1620/1621 SH REINFORCED
NON-IMPACT 37" x 72"
FINLESS INSTALLATION DETAILS

DRAWN: A.R.	DWG NO. 08-03159	REV D
SCALE NTS	DATE 08/16/17	SHEET 7 OF 16

L. ROBERTO LOMAS P.E.
208 7th Ave, INDIALANTIC, FL 32903
434-688-0609 rllomas@lrlomaspe.com

LUIS R. LOMAS LICENSE No. 62514 STATE OF FLORIDA PROFESSIONAL ENGINEER

Luis R. Lomas P.E.
FL No.: 62514

REVISIONS			
REV	DESCRIPTION	DATE	APPROVED
D	REVISED TO MODIFY PRODUCT'S NAME	08/29/2024	R.L.

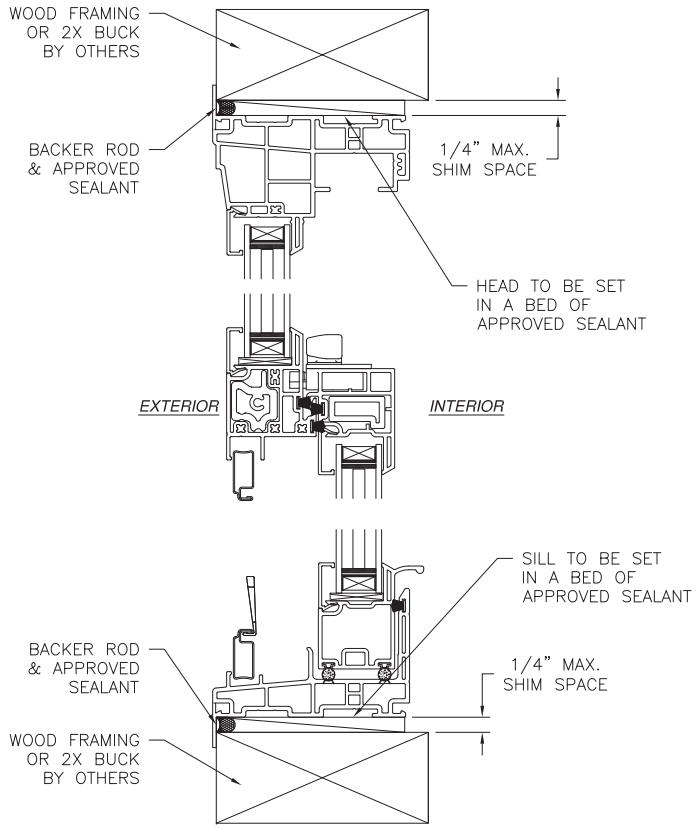

VERTICAL CROSS SECTION
WOOD FRAMING OR 2X BUCK INSTALLATION

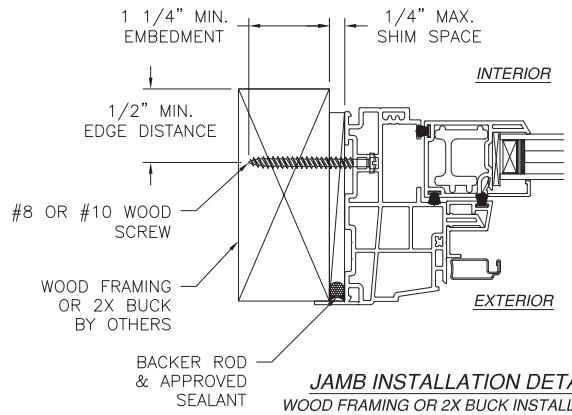

JAMB INSTALLATION DETAIL
WOOD FRAMING OR 2X BUCK INSTALLATION

NOTES:
1. *INTERIOR AND EXTERIOR FINISHES, BY OTHERS, NOT SHOWN FOR CLARITY.*
2. *PERIMETER AND JOINT SEALANT BY OTHERS TO BE DESIGNED IN ACCORDANCE WITH ASTM E2112*

SIGNED: 08/29/2024

MI WINDOWS AND DOORS LLC
650 WEST MARKET STREET
GRATZ, PA 17030

SERIES 1620/1621 SH REINFORCED
NON-IMPACT 37" x 72"
FLANGE INSTALLATION DETAILS

DRAWN:	DWG NO.	REV
A.R.	08-03159	D

SCALE	DATE	SHEET
NTS	08/16/17	8 OF 16

L. ROBERTO LOMAS P.E.
208 7th Ave, INDIALANTIC, FL 32903
434-688-0609 rllomas@lrlomaspe.com

LUIS R. LOMAS LICENSE No. 62514 STATE OF FLORIDA PROFESSIONAL ENGINEER

Luis R. Lomas P.E.
FL No.: 62514

REVISIONS			
REV	DESCRIPTION	DATE	APPROVED
D	REVISED TO MODIFY PRODUCT'S NAME	08/29/2024	R.L.

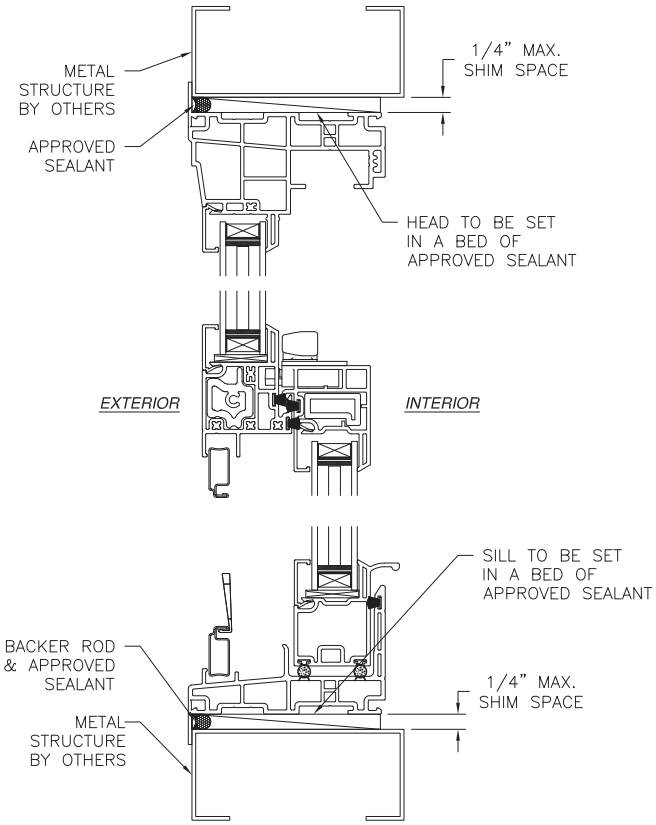

VERTICAL CROSS SECTION
METAL STRUCTURE INSTALLATION

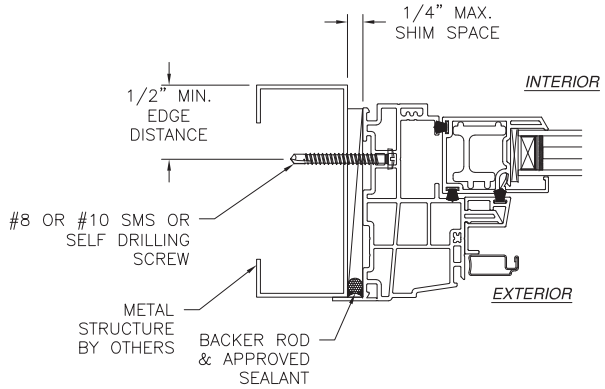

JAMB INSTALLATION DETAIL
METAL STRUCTURE INSTALLATION

NOTES:
1. *INTERIOR AND EXTERIOR FINISHES, BY OTHERS, NOT SHOWN FOR CLARITY.*
2. *PERIMETER AND JOINT SEALANT BY OTHERS TO BE DESIGNED IN ACCORDANCE WITH ASTM E2112*

SIGNED: 08/29/2024

MI WINDOWS AND DOORS LLC
650 WEST MARKET STREET
GRATZ, PA 17030

SERIES 1620/1621 SH REINFORCED
NON-IMPACT 37" x 72"
FLANGE INSTALLATION DETAILS

DRAWN:	DWG NO.	REV
A.R.	08-03159	D

SCALE	DATE	SHEET
NTS	08/16/17	9 OF 16

L. ROBERTO LOMAS P.E.
208 7th Ave, INDIALANTIC, FL 32903
434-688-0609 rllomas@lrlomaspe.com

LUIS R. LOMAS LICENSE No. 62514 STATE OF FLORIDA PROFESSIONAL ENGINEER

Luis R. Lomas P.E.
FL No.: 62514

REVISIONS			
REV	DESCRIPTION	DATE	APPROVED
D	REVISED TO MODIFY PRODUCT'S NAME	08/29/2024	R.L.

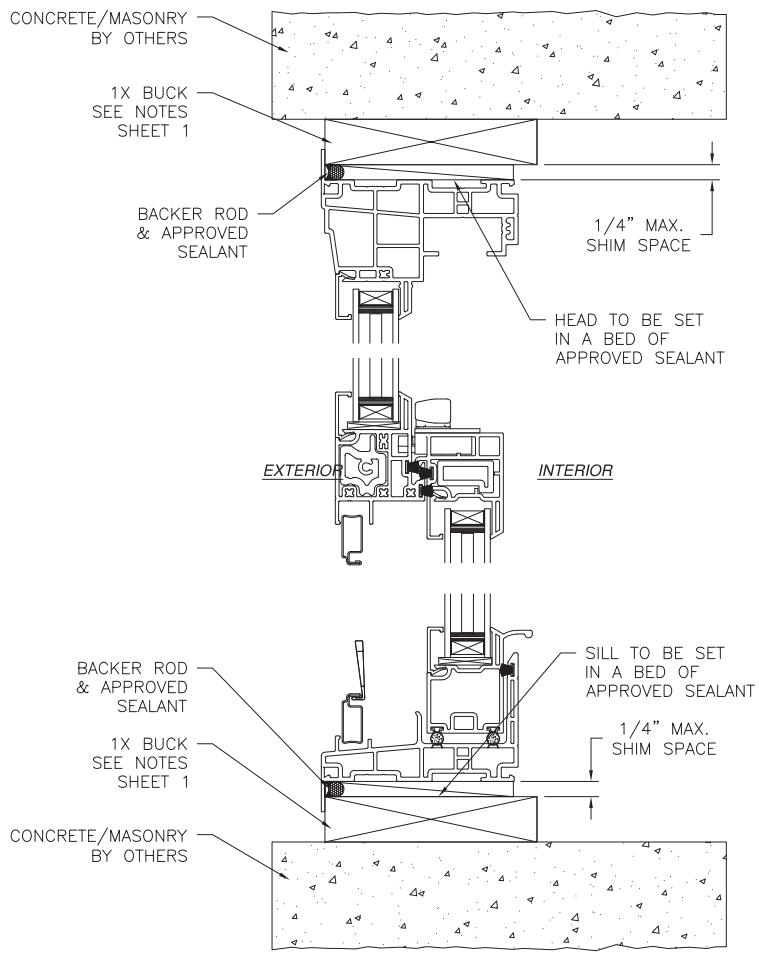

VERTICAL CROSS SECTION
CONCRETE/MASONRY INSTALLATION

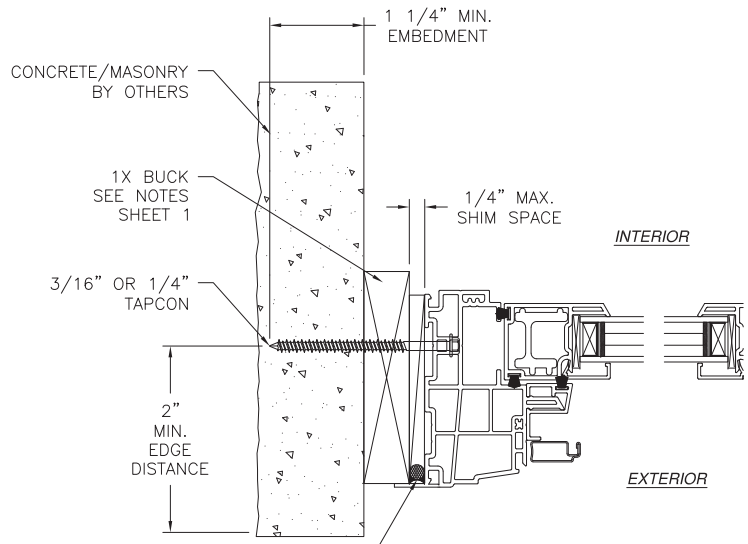

JAMB INSTALLATION DETAIL
CONCRETE/MASONRY INSTALLATION

NOTES:
1. *INTERIOR AND EXTERIOR FINISHES, BY OTHERS, NOT SHOWN FOR CLARITY.*
2. *PERIMETER AND JOINT SEALANT BY OTHERS TO BE DESIGNED IN ACCORDANCE WITH ASTM E2112*

SIGNED: 08/29/2024

MI WINDOWS AND DOORS LLC
650 WEST MARKET STREET
GRATZ, PA 17030

SERIES 1620/1621 SH REINFORCED
NON-IMPACT 37" x 72"
FLANGE INSTALLATION DETAILS

DRAWN:	DWG NO.	REV
A.R.	08-03159	D

SCALE	DATE	SHEET
NTS	08/16/17	10 OF 16

L. ROBERTO LOMAS P.E.
208 7th Ave, INDIALANTIC, FL 32903
434-688-0609 rllomas@lrlomaspe.com

LUIS R. LOMAS LICENSE No. 62514 STATE OF FLORIDA PROFESSIONAL ENGINEER

Luis R. Lomas P.E.
FL No.: 62514

REVISIONS			
REV	DESCRIPTION	DATE	APPROVED
D	REVISED TO MODIFY PRODUCT'S NAME	08/29/2024	R.L.

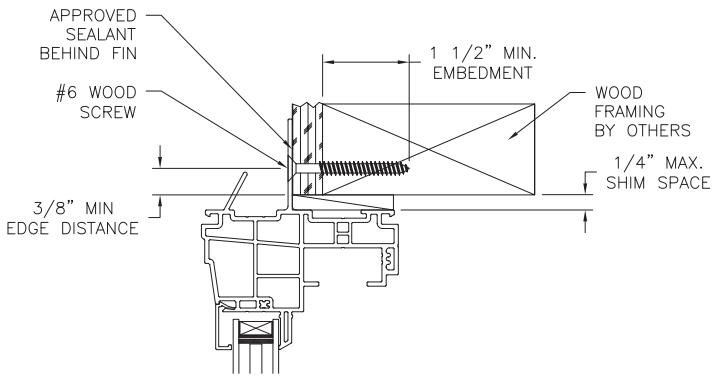

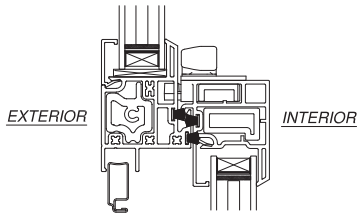

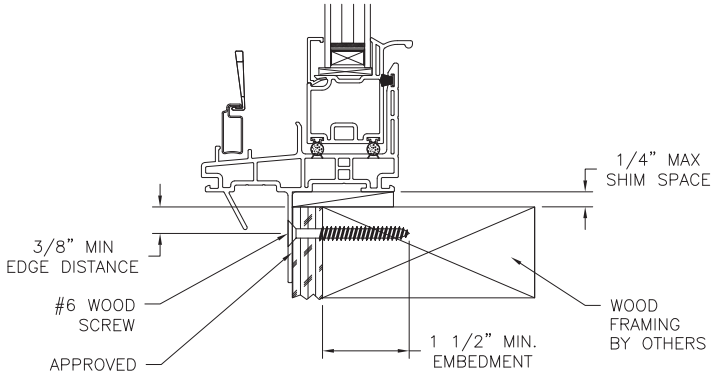

VERTICAL CROSS SECTION
WOOD FRAMING OR 2X BUCK INSTALLATION

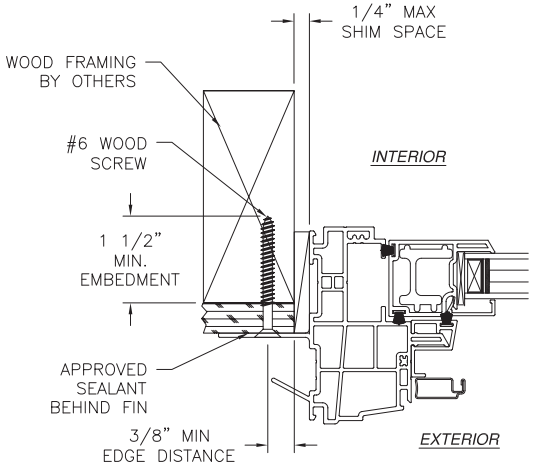

JAMB INSTALLATION DETAIL
WOOD FRAMING OR 2X BUCK INSTALLATION

NOTES:
1. *INTERIOR AND EXTERIOR FINISHES, BY OTHERS, NOT SHOWN FOR CLARITY.*
2. *PERIMETER AND JOINT SEALANT BY OTHERS TO BE DESIGNED IN ACCORDANCE WITH ASTM E2112*

SIGNED: 08/29/2024

MI WINDOWS AND DOORS LLC
650 WEST MARKET STREET
GRATZ, PA 17030

SERIES 1620/1621 SH REINFORCED
NON-IMPACT 37" x 72"
FIN WITH J CHANNEL INSTALLATION DETAILS

DRAWN: A.R.	DWG NO. 08-03159	REV D
SCALE NTS	DATE 08/16/17	SHEET 11 OF 16

L. ROBERTO LOMAS P.E.
208 7th Ave, INDIALANTIC, FL 32903
434-688-0609 rllomas@lrlomaspe.com

LUIS R. LOMAS LICENSE No. 62514 STATE OF FLORIDA PROFESSIONAL ENGINEER

Luis R. Lomas P.E.
FL No.: 62514

REVISIONS			
REV	DESCRIPTION	DATE	APPROVED
D	REVISED TO MODIFY PRODUCT'S NAME	08/29/2024	R.L.

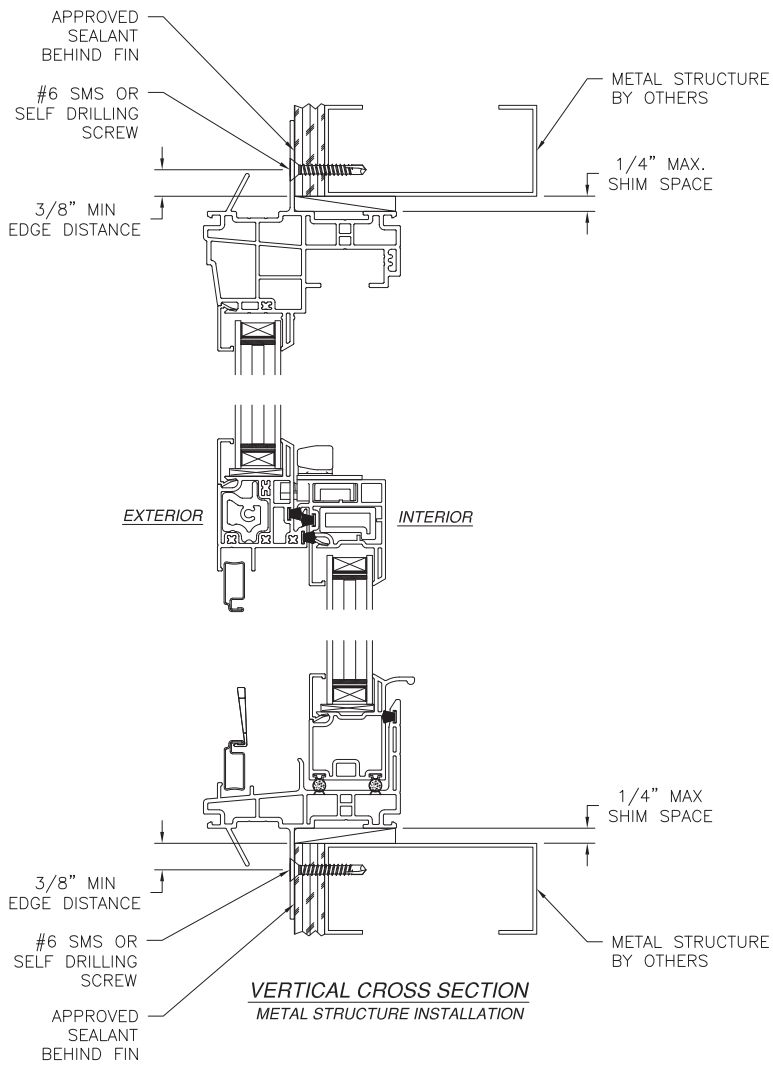

VERTICAL CROSS SECTION
METAL STRUCTURE INSTALLATION

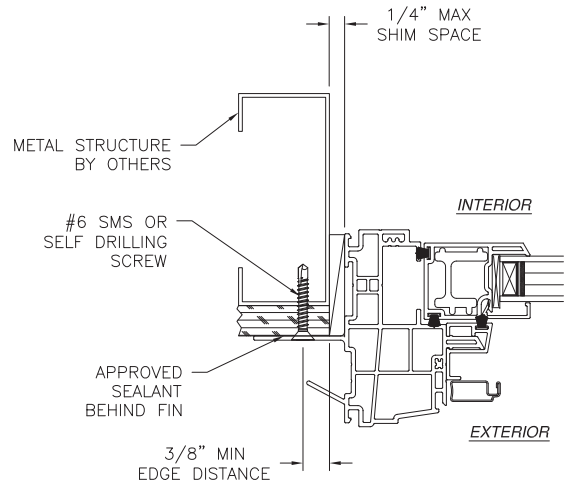

JAMB INSTALLATION DETAIL
METAL STRUCTURE INSTALLATION

NOTES:
1. *INTERIOR AND EXTERIOR FINISHES, BY OTHERS, NOT SHOWN FOR CLARITY.*
2. *PERIMETER AND JOINT SEALANT BY OTHERS TO BE DESIGNED IN ACCORDANCE WITH ASTM E2112*

SIGNED: 08/29/2024

MI WINDOWS AND DOORS LLC
650 WEST MARKET STREET
GRATZ, PA 17030

SERIES 1620/1621 SH REINFORCED
NON-IMPACT 37" x 72"
FIN WITH J CHANNEL INSTALLATION DETAILS

DRAWN:	DWG NO.	REV
A.R.	08-03159	D

SCALE	DATE	SHEET
NTS	08/16/17	12 OF 16

L. ROBERTO LOMAS P.E.
208 7th Ave, INDIALANTIC, FL 32903
434-688-0609 rllomas@lrlomaspe.com

LUIS R. LOMAS LICENSE No. 62514 STATE OF FLORIDA PROFESSIONAL ENGINEER

Luis R. Lomas P.E.
FL No.: 62514

REVISIONS			
REV	DESCRIPTION	DATE	APPROVED
D	REVISED TO MODIFY PRODUCT'S NAME	08/29/2024	R.L.

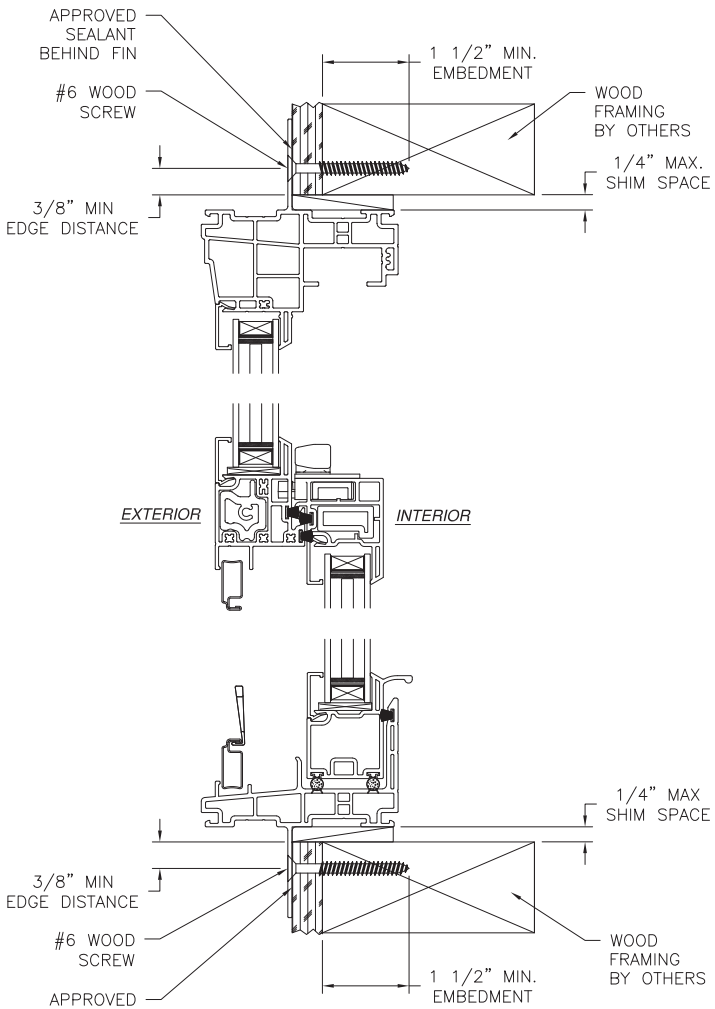

VERTICAL CROSS SECTION
WOOD FRAMING OR 2X BUCK INSTALLATION

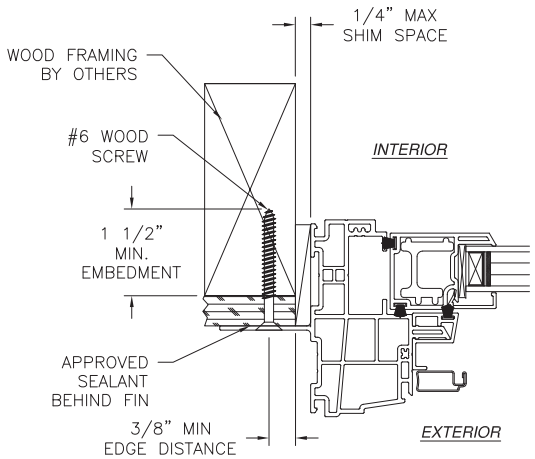

JAMB INSTALLATION DETAIL
WOOD FRAMING OR 2X BUCK INSTALLATION

NOTES:
1. *INTERIOR AND EXTERIOR FINISHES, BY OTHERS, NOT SHOWN FOR CLARITY.*
2. *PERIMETER AND JOINT SEALANT BY OTHERS TO BE DESIGNED IN ACCORDANCE WITH ASTM E2112*

SIGNED: 08/29/2024

MI WINDOWS AND DOORS LLC
650 WEST MARKET STREET
GRATZ, PA 17030

SERIES 1620/1621 SH REINFORCED
NON-IMPACT 37" x 72"
FIN INSTALLATION DETAILS

DRAWN:	DWG NO.	REV
A.R.	08-03159	D
SCALE NTS	DATE 08/16/17	SHEET 13 OF 16

L. ROBERTO LOMAS P.E.
208 7th Ave, INDIALANTIC, FL 32903
434-688-0609 rllomas@lrlomaspe.com

LUIS R. LOMAS LICENSE No. 62514 STATE OF FLORIDA PROFESSIONAL ENGINEER

Luis R. Lomas P.E.
FL No.: 62514

REVISIONS			
REV	DESCRIPTION	DATE	APPROVED
D	REVISED TO MODIFY PRODUCT'S NAME	08/29/2024	R.L.

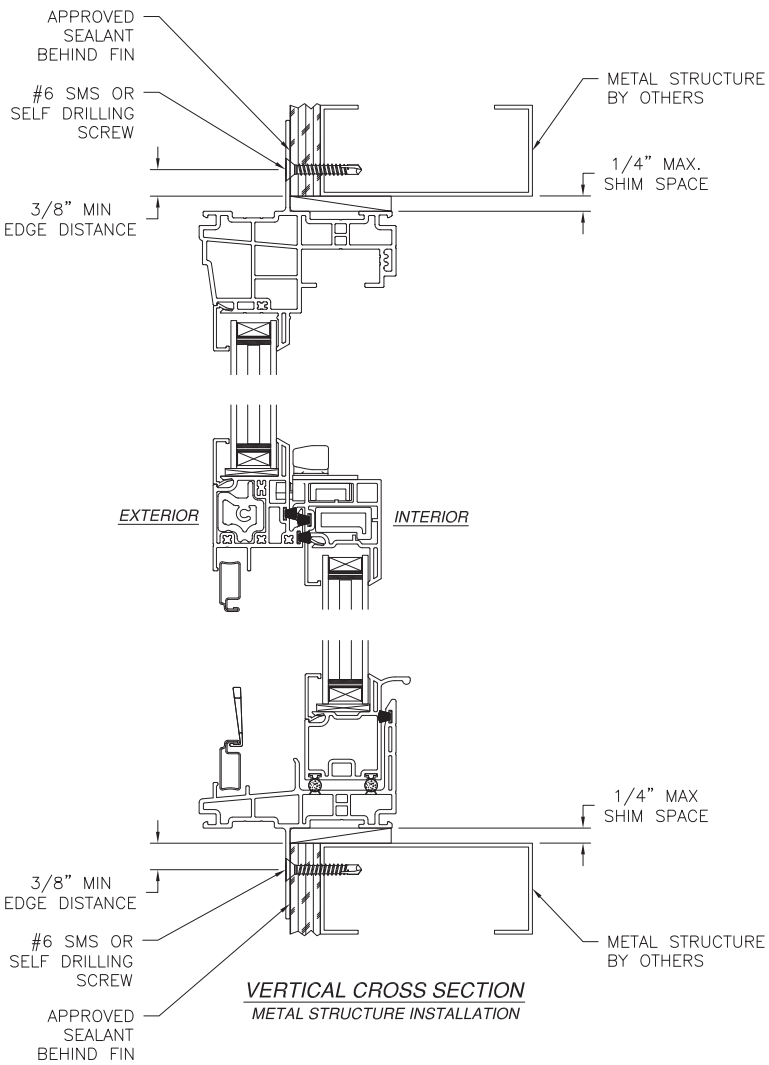

VERTICAL CROSS SECTION
METAL STRUCTURE INSTALLATION

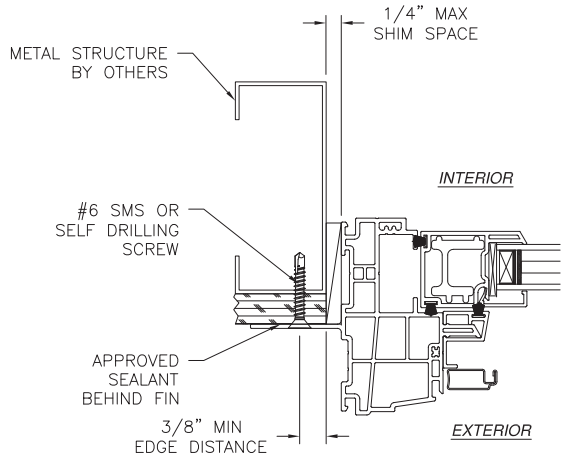

JAMB INSTALLATION DETAIL
METAL STRUCTURE INSTALLATION

NOTES:
1. *INTERIOR AND EXTERIOR FINISHES, BY OTHERS, NOT SHOWN FOR CLARITY.*
2. *PERIMETER AND JOINT SEALANT BY OTHERS TO BE DESIGNED IN ACCORDANCE WITH ASTM E2112*

SIGNED: 08/29/2024

MI WINDOWS AND DOORS LLC
650 WEST MARKET STREET
GRATZ, PA 17030

SERIES 1620/1621 SH REINFORCED
NON-IMPACT 37" x 72"
FIN INSTALLATION DETAILS

DRAWN:	DWG NO.	REV
A.R.	08-03159	D

SCALE	DATE	SHEET
NTS	08/16/17	14 OF 16

L. ROBERTO LOMAS P.E.
208 7th Ave, INDIALANTIC, FL 32903
434-688-0609 rllomas@lrlomaspe.com

LUIS R. LOMAS LICENSE No. 62514 STATE OF FLORIDA PROFESSIONAL ENGINEER

Luis R. Lomas P.E.
FL No.: 62514

REVISIONS			
REV	DESCRIPTION	DATE	APPROVED
D	REVISED TO MODIFY PRODUCT'S NAME	08/29/2024	R.L.

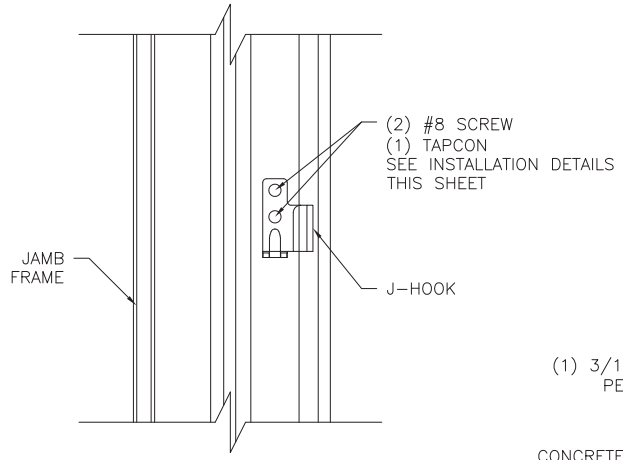

J-HOOK TO JAMB CONNECTION DETAIL

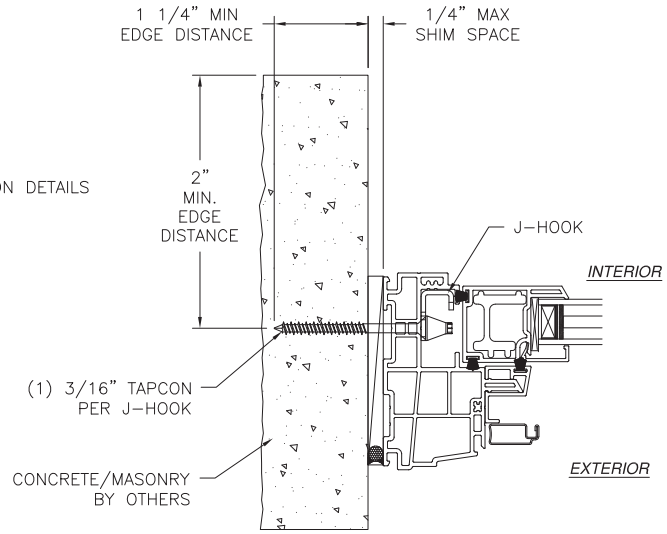

J-HOOK INSTALLATION DETAIL

CONCRETE/MASONRY WITHOUT 1X BUCK INSTALLATION
FOR CONCRETE/MASONRY INSTALLATION WITH 1X BUCK REFER TO
HEAD AND SILL INSTALLATION DETAILS

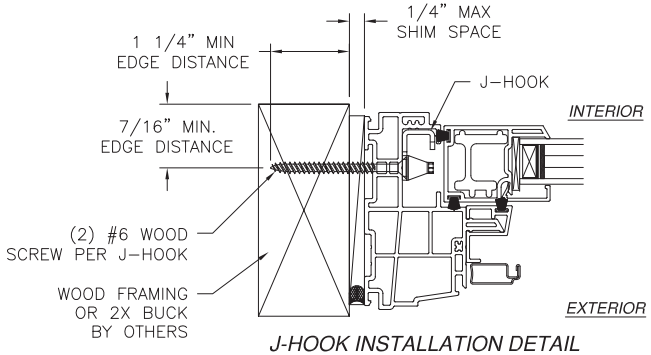

J-HOOK INSTALLATION DETAIL

WOOD FRAMING OR 2X BUCK INSTALLATION

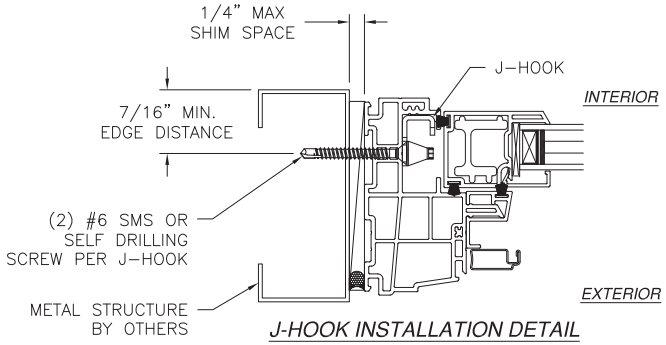

J-HOOK INSTALLATION DETAIL

METAL STRUCTURE INSTALLATION

SIGNED: 08/29/2024

MI WINDOWS AND DOORS LLC
650 WEST MARKET STREET
GRATZ, PA 17030

SERIES 1620/1621 SH REINFORCED
NON-IMPACT 37" x 72"
J-HOOK INSTALLATION DETAILS

DRAWN: A.R.	DWG NO. 08-03159	REV D
SCALE NTS	DATE 08/16/17	SHEET 15 OF 16

L. ROBERTO LOMAS P.E.
208 7th Ave, INDIALANTIC, FL 32903
434-688-0609 rllomas@lrlomaspe.com

LUIS R. LOMAS LICENSE No. 62514 STATE OF FLORIDA PROFESSIONAL ENGINEER

Luis R. Lomas P.E.
FL No.: 62514

REVISIONS			
REV	DESCRIPTION	DATE	APPROVED
D	REVISED TO MODIFY PRODUCT'S NAME	08/29/2024	R.L.

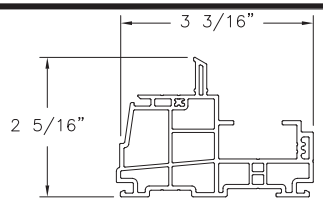

HEAD/JAMB FINLESS
EXTRUDED PVC (V-1008)

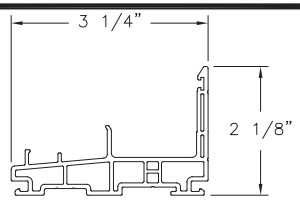

SILL FINLESS
EXTRUDED PVC (V-1013)

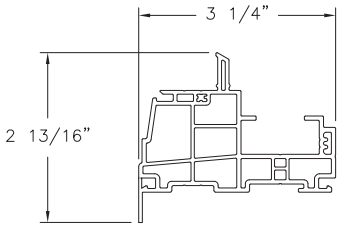

HEAD/JAMB WITH FLANGE
EXTRUDED PVC (VE-000025)

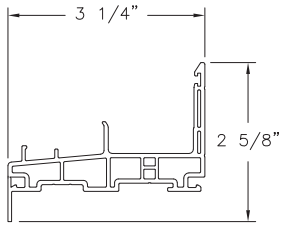

SILL WITH FLANGE
EXTRUDED PVC (VE-000021)

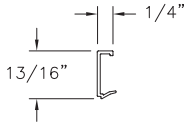

GLAZING BEAD
RIGID PVC (V-904)

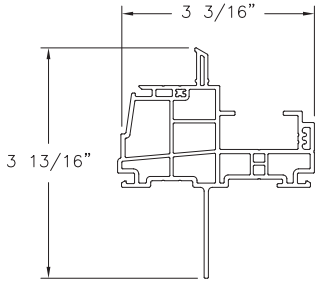

HEAD/JAMB FIN INSTALLATION
EXTRUDED PVC (V-1007)

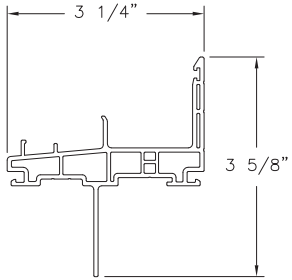

SILL FIN INSTALLATION
EXTRUDED PVC (V-1012)

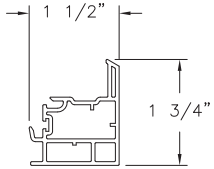

BOTTOM SASH/TOP RAIL
EXTRUDED PVC (V-675)

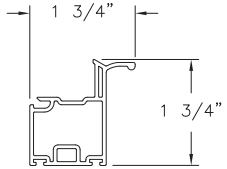

BOTTOM SASH/BOTTOM RAIL
EXTRUDED PVC (V-672)

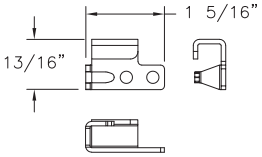

J-HOOK

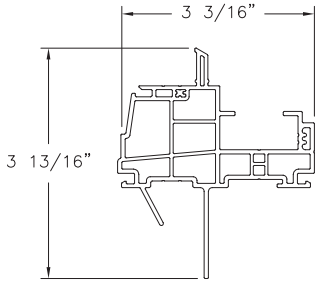

HEAD/JAMB FIN INSTALLATION WITH J-CHANNEL
EXTRUDED PVC (V-1006)

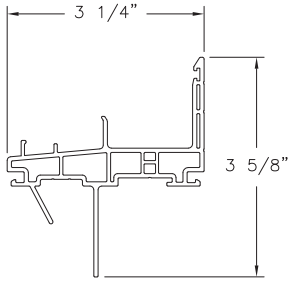

SILL FIN INSTALLATION WITH J-CHANNEL
EXTRUDED PVC (V-1011)

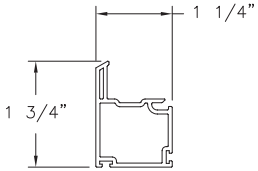

BOTTOM SASH/STILE
EXTRUDED PVC (V-670)

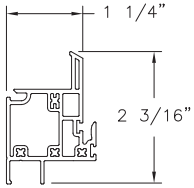

MEETING RAIL
EXTRUDED PVC (V-1016)

SIGNED: 08/29/2024

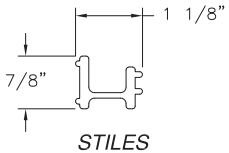

STILES REINFORCEMENT
ALUMINUM 6063-T5 (M-2266)

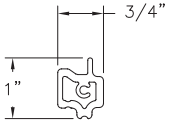

MEETING RAIL REINFORCEMENT
ALUMINUM 6063-T5 (AE-000162)

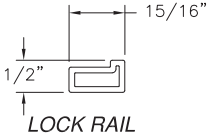

LOCK RAIL REINFORCEMENT
ALUMINUM 6063-T5 (M-2115)

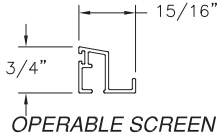

OPERABLE SCREEN TRACK W/O LEG
ALUMINUM 6063-T5 (M-2341)

MI WINDOWS AND DOORS LLC
650 WEST MARKET STREET
GRATZ, PA 17030

SERIES 1620/1621 SH REINFORCED
NON-IMPACT 37" x 72"
COMPONENTS

DRAWN: A.R.	DWG NO. 08-03159	REV D
SCALE NTS	DATE 08/16/17	SHEET 16 OF 16

L. ROBERTO LOMAS P.E.
208 7th Ave, INDIALANTIC, FL 32903
434-688-0609 rllomas@lrlomaspe.com

LUIS R. LOMAS LICENSE No. 62514 STATE OF FLORIDA PROFESSIONAL ENGINEER

Luis R. Lomas P.E.
FL No.: 62514

REVISIONS			
REV	DESCRIPTION	DATE	APPROVED
A	REVISED PER NEW CODE	10/25/2023	R.L.

NOTES:

1. THE PRODUCT SHOWN HEREIN IS DESIGNED AND MANUFACTURED TO COMPLY WITH REQUIREMENTS OF THE FLORIDA BUILDING CODE.
2. WOOD FRAMING AND MASONRY OPENING TO BE DESIGNED AND ANCHORED TO PROPERLY TRANSFER ALL LOADS TO STRUCTURE. FRAMING AND MASONRY OPENING IS THE RESPONSIBILITY OF THE ARCHITECT OR ENGINEER OF RECORD.
3. WHERE SHIM OR BUCK THICKNESS IS LESS THAN 1–1/2" WINDOW UNITS MUST BE ANCHORED THROUGH THE FRAME IN ACCORDANCE WITH MANUFACTURER'S PUBLISHED INSTALLATION INSTRUCTIONS. ANCHORS SHALL BE SECURELY FASTENED DIRECTLY INTO MASONRY, CONCRETE OR OTHER STRUCTURAL SUBSTRATE MATERIAL.
4. WHERE WOOD BUCK THICKNESS IS 1–1/2" OR GREATER, BUCK SHALL BE SECURELY FASTENED TO MASONRY, CONCRETE OR OTHER STRUCTURAL SUBSTRATE. WINDOW UNITS MAY BE ANCHORED THROUGH FRAME TO SECURED WOOD BUCK IN ACCORDANCE WITH MANUFACTURER'S PUBLISHED INSTALLATION INSTRUCTIONS.
5. WHERE 1X BUCK IS NOT USED DISSIMILAR MATERIALS MUST BE SEPARATED WITH APPROVED COATING OR MEMBRANE. SELECTION OF COATING OR MEMBRANE IS THE RESPONSIBILITY OF THE ARCHITECT OR ENGINEER OF RECORD.
6. BUCKS SHALL EXTEND BEYOND WINDOW INTERIOR FACE SO THAT FULL FRAME SUPPORT IS PROVIDED.
7. SHIM AS NEEDED AT EACH ANCHOR LOCATION WITH LOAD BEARING SHIM. SHIM WHERE SPACE OF 1/16" OR GREATER OCCURS. MAXIMUM ALLOWABLE SHIM STACK TO BE 1/4".
8. SHIMS SHALL BE LOCATED, APPLIED AND MADE FROM MATERIALS AND THICKNESS CAPABLE OF SUSTAINING APPLICABLE LOADS.
9. WIND LOAD DURATION FACTOR Cd=1.6 WAS USED FOR WOOD ANCHOR CALCULATIONS.
10. FRAME MATERIAL: EXTRUDED RIGID PVC.
11. UNITS MUST BE GLAZED PER ASTM E1300.
12. APPROVED IMPACT PROTECTIVE SYSTEM <u>IS REQUIRED</u> FOR THIS PRODUCT IN WIND BORNE DEBRIS REGIONS.
13. FOR ANCHORING THROUGH FIN INTO WOOD FRAMING OR 2X BUCK USE #6 WOOD SCREWS WITH SUFFICIENT LENGTH TO ACHIEVE A 1 1/4" MINIMUM EMBEDMENT INTO SUBSTRATE. LOCATE ANCHORS AS SHOWN IN ELEVATIONS AND INSTALLATION DETAILS.
14. FOR ANCHORING THROUGH FIN INTO METAL STRUCTURE USE #8 SMS OR SELF DRILLING SCREWS WITH SUFFICIENT LENGTH TO ACHIEVE 3 THREADS MINIMUM BEYOND STRUCTURE INTERIOR WALL. LOCATE ANCHORS AS SHOWN IN ELEVATIONS AND INSTALLATION DETAILS.
15. FOR ANCHORING THROUGH FRAME INTO WOOD FRAMING OR 2X BUCK USE #8 WOOD SCREWS WITH SUFFICIENT LENGTH TO ACHIEVE A 1 1/4" MINIMUM EMBEDMENT INTO SUBSTRATE. LOCATE ANCHORS AS SHOWN IN ELEVATIONS AND INSTALLATION DETAILS.
16. FOR ANCHORING THROUGH FRAME INTO MASONRY/CONCRETE USE 3/16" TAPCONS WITH SUFFICIENT LENGTH TO ACHIEVE A 1 1/4" MINIMUM EMBEDMENT INTO SUBSTRATE WITH 2'' MINIMUM EDGE DISTANCE. LOCATE ANCHORS AS SHOWN IN ELEVATIONS AND INSTALLATION DETAILS.
17. FOR ANCHORING THROUGH FRAME INTO METAL STRUCTURE USE #8 SMS OR SELF DRILLING SCREWS WITH SUFFICIENT LENGTH TO ACHIEVE 3 THREADS MINIMUM BEYOND STRUCTURE INTERIOR WALL. LOCATE ANCHORS AS SHOWN IN ELEVATIONS AND INSTALLATION DETAILS.
18. ALL FASTENERS TO BE CORROSION RESISTANT.
19. INSTALLATION ANCHORS SHALL BE INSTALLED IN ACCORDANCE WITH ANCHOR MANUFACTURER'S INSTALLATION INSTRUCTIONS AND ANCHORS SHALL NOT BE USED IN SUBSTRATES WITH STRENGTHS LESS THAN THE MINIMUM STRENGTH SPECIFIED BELOW:
    - 19.1. WOOD: MINIMUM SPECIFIC GRAVITY OF G=0.42
    - 19.2. CONCRETE: MINIMUM COMPRESSIVE STRENGTH OF 2,000 PSI.
    - 19.3. MASONRY: HOLLOW/FILLED BLOCK PER ASTM C90 WITH Fm=2,000PSI MINIMUM.
    - 19.4. METAL STRUCTURE: STEEL 18GA (.048") FY=33KSI/FU=52KSI OR ALUMINUM 6063–T5 FU=30KSI 1/8" THICK MINIMUM

SIGNED: 10/25/2023

TABLE OF CONTENTS

SHEET NO.	DESCRIPTION
1	NOTES
2	ELEVATIONS
3 – 12	INSTALLATION DETAILS
13	INSTALLATION DETAILS

MI WINDOWS AND DOORS LLC
650 MARKET STREET
GRATZ, PA 17030

SERIES 1630 HS REINFORCED
NON–IMPACT 72" X 53"
NOTES

DRAWN:	DWG NO.	REV
R.L.	08–03000	A

SCALE NTS | DATE 11/30/16 | SHEET 1 OF 13

L. ROBERTO LOMAS P.E.
208 7th Ave, INDIALANTIC, FL 32903
434-688-0609 rllomas@lrlomaspe.com

LUIS R. LOMAS LICENSE No. 62514 STATE OF FLORIDA PROFESSIONAL ENGINEER

Luis R. Lomas P.E.
FL No.: 62514

REVISIONS			
REV	DESCRIPTION	DATE	APPROVED
A	REVISED PER NEW CODE	10/25/2023	R.L.

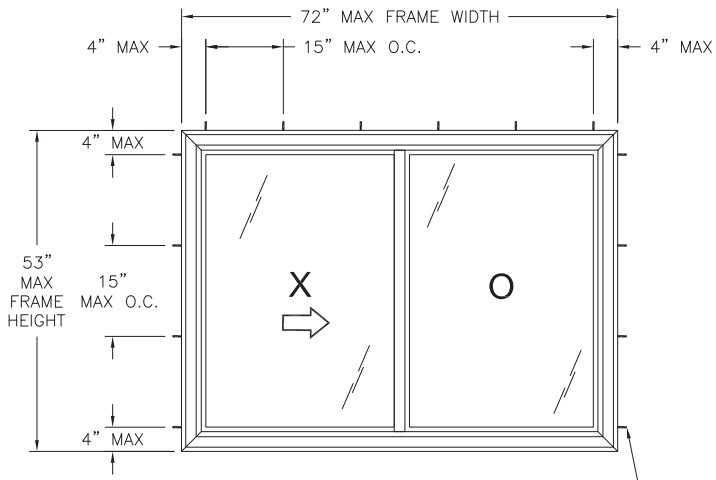

1630 SH REINFORCED
EXTERIOR VIEW
FINLESS & FLANGE INSTALLATION

FOR NUMBER OF ANCHORS REQUIRED SEE CHART #1

DESIGN PRESSURE RATING	IMPACT RATING
±45.0PSF	NONE

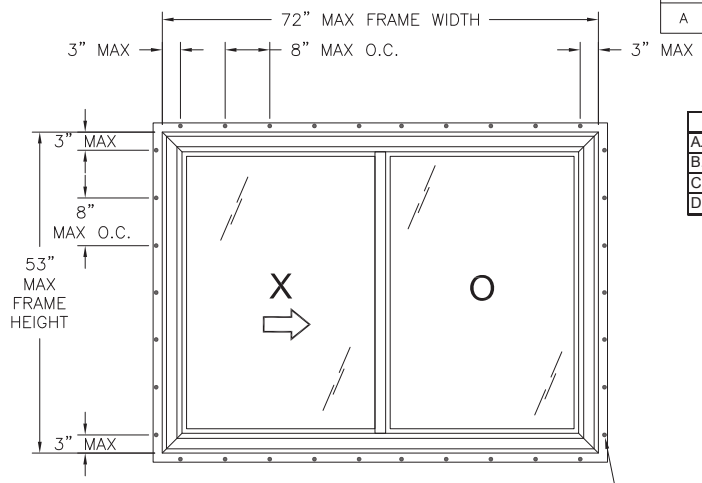

1630 SH REINFORCED
EXTERIOR VIEW
FIN INSTALLATION

FOR NUMBER OF ANCHORS REQUIRED SEE CHART #2

DESIGN PRESSURE RATING	IMPACT RATING
+50.0/-60.0PSF	NONE

HARDWARE SCHEDULE	
A.	(2) METAL LOCK WITH KEEPER 14" FROM TOP AND BOTTOM RAIL
B.	(2) SASH WHEELS 1 1/2" FROM STILES ALONG BOTTOM RAIL
C.	ALUMINUM REINFORCEMENT (AE-000162) AT INTERMEDIATE JAMB
D.	ALUMINUM REINFORCEMENT (M-2115) AT SASH LOCKING STILE

NOTES:
1. *MAXIMUM SASH SIZE: 35 5/8" X 50"*
2. *MAXIMUM D.L.O.: 32 1/16" X 48 1/4"*

Chart #1
Number of anchor locations required

Frame Height (in)	Frame Width (in) 36.00 Head	36.00 Jamb	42.00 Head	42.00 Jamb	48.00 Head	48.00 Jamb	54.00 Head	54.00 Jamb	60.00 Head	60.00 Jamb	66.00 Head	66.00 Jamb	72.00 Head	72.00 Jamb
24.00	3	3	4	3	4	3	5	3	5	3	5	3	6	3
30.00	3	3	4	3	4	3	5	3	5	3	5	3	6	3
36.00	3	3	4	3	4	3	5	3	5	3	5	3	6	3
42.00	3	4	4	4	4	4	5	4	5	4	5	4	6	4
48.00	3	4	4	4	4	4	5	4	5	4	5	4	6	4
53.00	3	4	4	4	4	4	5	4	5	4	5	4	6	4

Chart #2
Number of anchor locations required

Frame Height (in)	Frame Width (in) 36.00 H & S	36.00 Jamb	42.00 H & S	42.00 Jamb	48.00 H & S	48.00 Jamb	54.00 H & S	54.00 Jamb	60.00 H & S	60.00 Jamb	66.00 H & S	66.00 Jamb	72.00 H & S	72.00 Jamb
24.00	5	4	6	4	7	4	7	4	8	4	9	4	10	4
30.00	5	4	6	4	7	4	7	4	8	4	9	4	10	4
36.00	5	5	6	5	7	5	7	5	8	5	9	5	10	5
42.00	5	6	6	6	7	6	7	6	8	6	9	6	10	6
48.00	5	7	6	7	7	7	7	7	8	7	9	7	10	7
53.00	5	7	6	7	7	7	7	7	8	7	9	7	10	7

SIGNED: 10/25/2023

MI WINDOWS AND DOORS LLC
650 MARKET STREET
GRATZ, PA 17030

SERIES 1630 HS REINFORCED
NON-IMPACT 72" X 53"
ELEVATIONS

DRAWN: R.L.	DWG NO. 08-03000	REV A
SCALE NTS	DATE 11/30/16	SHEET 2 OF 13

L. ROBERTO LOMAS P.E.
208 7th Ave, INDIALANTIC, FL 32903
434-688-0609 rllomas@lrlomaspe.com

LUIS R. LOMAS LICENSE No. 62514 STATE OF FLORIDA PROFESSIONAL ENGINEER

Luis R. Lomas P.E.
FL No.: 62514

REVISIONS			
REV	DESCRIPTION	DATE	APPROVED
A	REVISED PER NEW CODE	10/25/2023	R.L.

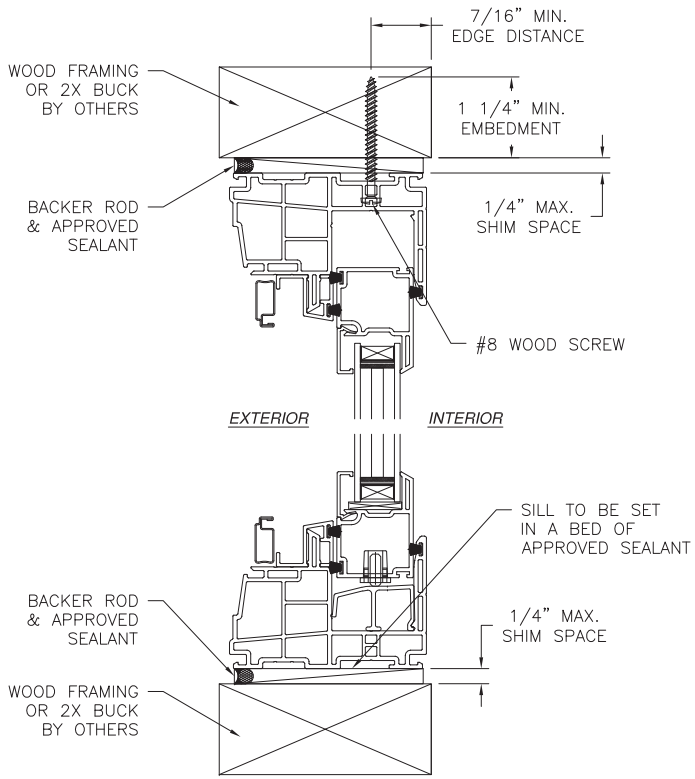

VERTICAL CROSS SECTION

WOOD FRAMING OR 2X BUCK INSTALLATION

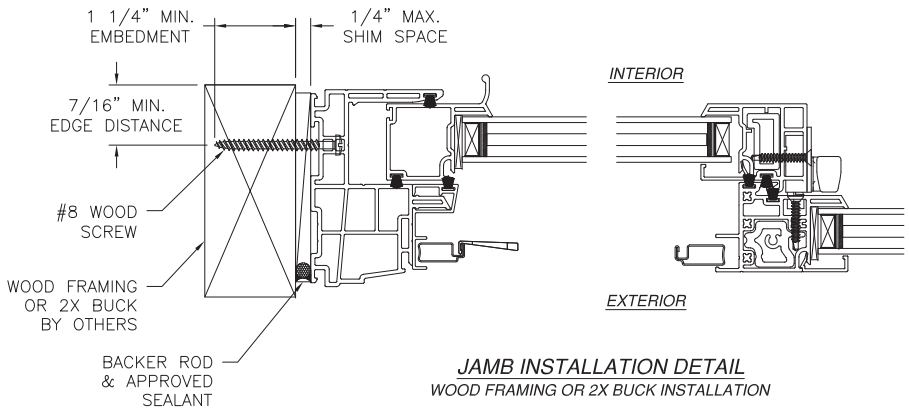

JAMB INSTALLATION DETAIL

WOOD FRAMING OR 2X BUCK INSTALLATION

NOTES:

1. *INTERIOR AND EXTERIOR FINISHES, BY OTHERS, NOT SHOWN FOR CLARITY.*
2. *PERIMETER AND JOINT SEALANT BY OTHERS TO BE DESIGNED IN ACCORDANCE WITH ASTM E2112*

SIGNED: 10/25/2023

MI WINDOWS AND DOORS LLC
650 MARKET STREET
GRATZ, PA 17030

SERIES 1630 HS REINFORCED
NON-IMPACT 72" X 53"
FINLESS INSTALLATION DETAILS

DRAWN:	DWG NO.	REV
R.L.	08-03000	A

SCALE	DATE	SHEET
NTS	11/30/16	3 OF 13

L. ROBERTO LOMAS P.E.
208 7th Ave, INDIALANTIC, FL 32903
434-688-0609 rllomas@lrlomaspe.com

LUIS R. LOMAS
LICENSE
No. 62514
STATE OF
FLORIDA
PROFESSIONAL ENGINEER

Luis R. Lomas P.E.
FL No.: 62514

REVISIONS			
REV	DESCRIPTION	DATE	APPROVED
A	REVISED PER NEW CODE	10/25/2023	R.L.

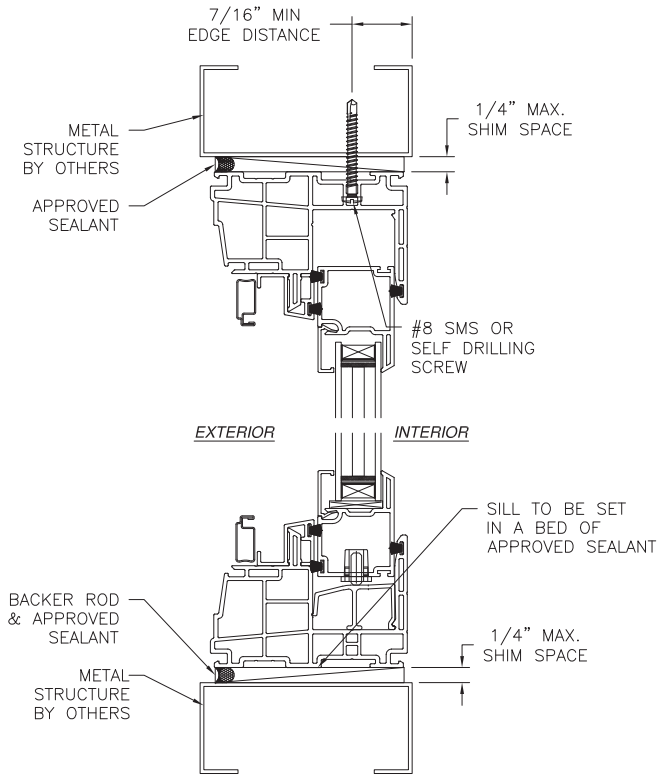

VERTICAL CROSS SECTION
METAL STRUCTURE INSTALLATION

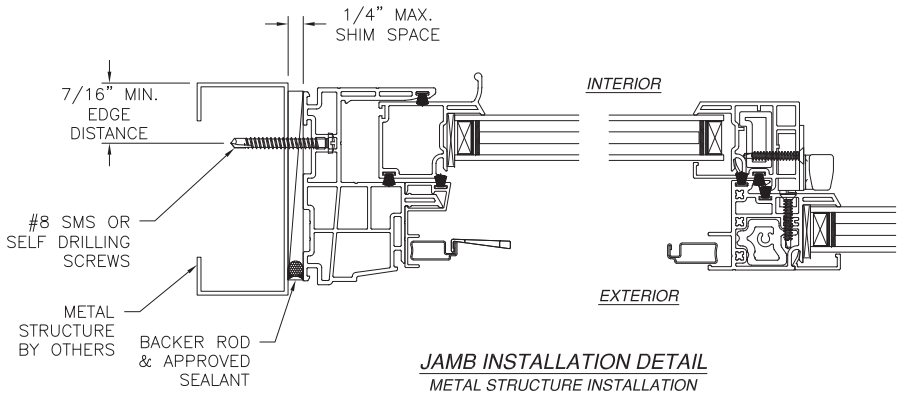

JAMB INSTALLATION DETAIL
METAL STRUCTURE INSTALLATION

NOTES:
1. *INTERIOR AND EXTERIOR FINISHES, BY OTHERS, NOT SHOWN FOR CLARITY.*
2. *PERIMETER AND JOINT SEALANT BY OTHERS TO BE DESIGNED IN ACCORDANCE WITH ASTM E2112*

SIGNED: 10/25/2023

MI WINDOWS AND DOORS LLC
650 MARKET STREET
GRATZ, PA 17030

SERIES 1630 HS REINFORCED
NON-IMPACT 72" X 53"
FINLESS INSTALLATION DETAILS

DRAWN:	DWG NO.	REV
R.L.	08-03000	A

SCALE	DATE	SHEET
NTS	11/30/16	4 OF 13

L. ROBERTO LOMAS P.E.
208 7th Ave, INDIALANTIC, FL 32903
434-688-0609 rllomas@lrlomaspe.com

LUIS R. LOMAS
LICENSE
No. 62514
STATE OF
FLORIDA
PROFESSIONAL ENGINEER

Luis R. Lomas P.E.
FL No.: 62514

REVISIONS			
REV	DESCRIPTION	DATE	APPROVED
A	REVISED PER NEW CODE	10/25/2023	R.L.

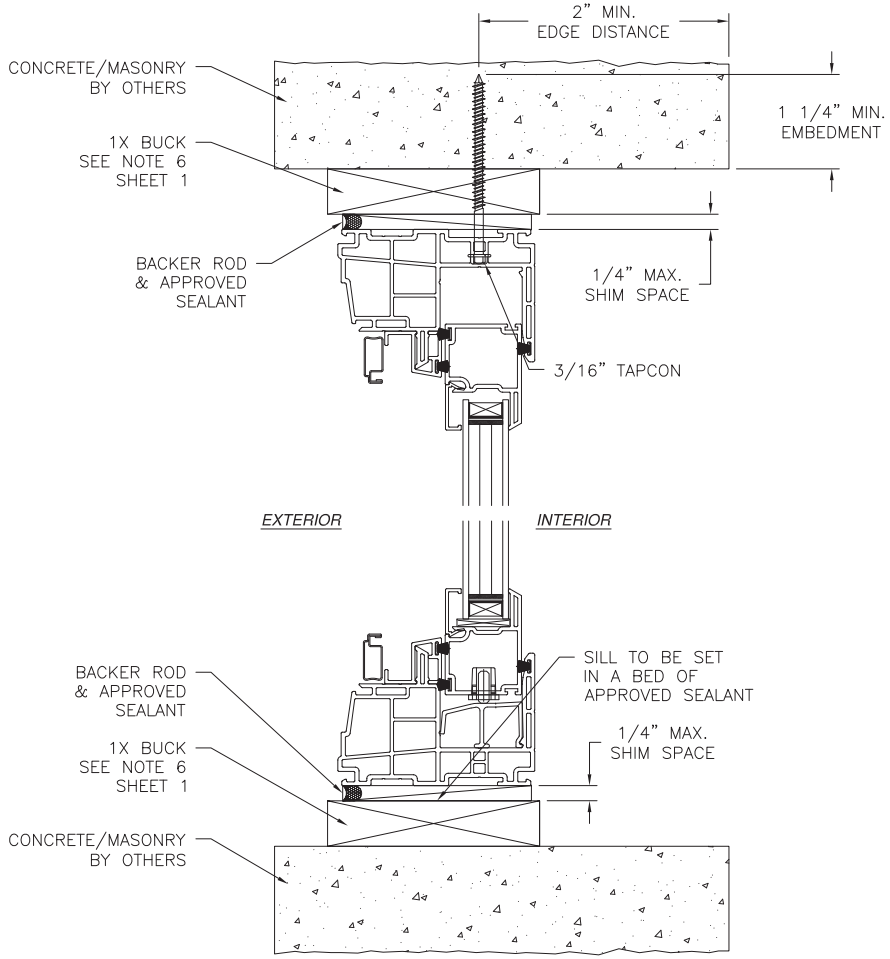

VERTICAL CROSS SECTION

CONCRETE/MASONRY WITH 1X BUCK INSTALLATION
FOR CONCRETE/MASONRY WITHOUT 1X BUCK REFER TO
JAMB INSTALLATION DETAIL

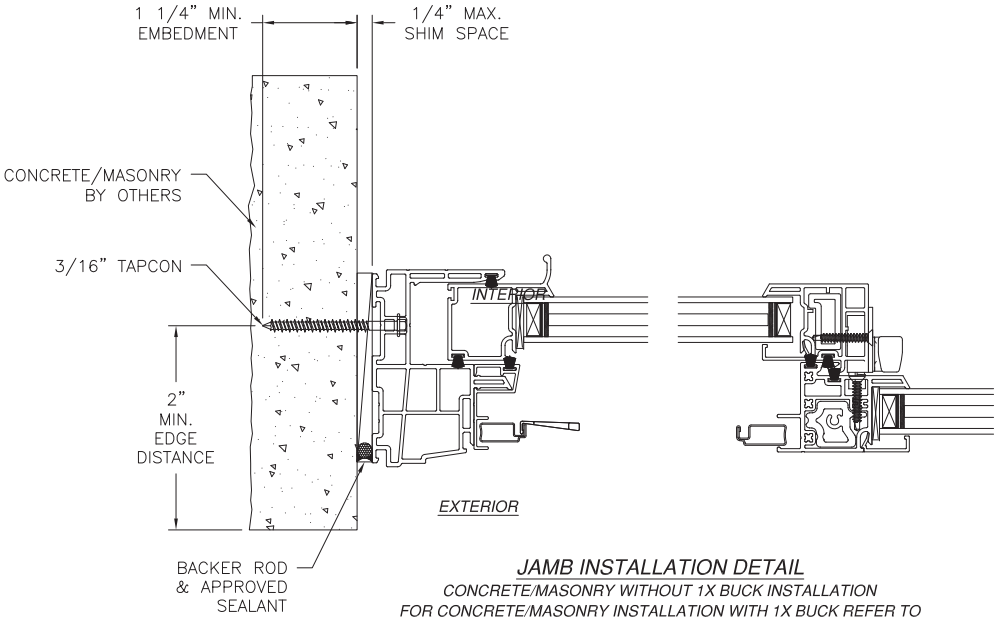

JAMB INSTALLATION DETAIL

CONCRETE/MASONRY WITHOUT 1X BUCK INSTALLATION
FOR CONCRETE/MASONRY INSTALLATION WITH 1X BUCK REFER TO
HEAD AND SILL INSTALLATION DETAILS

NOTES:

1. *INTERIOR AND EXTERIOR FINISHES, BY OTHERS, NOT SHOWN FOR CLARITY.*
2. *PERIMETER AND JOINT SEALANT BY OTHERS TO BE DESIGNED IN ACCORDANCE WITH ASTM E2112*

SIGNED: 10/25/2023

MI WINDOWS AND DOORS LLC
650 MARKET STREET
GRATZ, PA 17030

SERIES 1630 HS REINFORCED
NON-IMPACT 72" X 53"
FINLESS INSTALLATION DETAILS

DRAWN:	DWG NO.	REV
R.L.	08-03000	A

SCALE	DATE	SHEET
NTS	11/30/16	5 OF 13

L. ROBERTO LOMAS P.E.
208 7th Ave, INDIALANTIC, FL 32903
434-688-0609 rllomas@lrlomaspe.com

LUIS R. LOMAS
LICENSE
No. 62514
STATE OF
FLORIDA
PROFESSIONAL ENGINEER

Luis R. Lomas P.E.
FL No.: 62514

REVISIONS			
REV	DESCRIPTION	DATE	APPROVED
A	REVISED PER NEW CODE	10/25/2023	R.L.

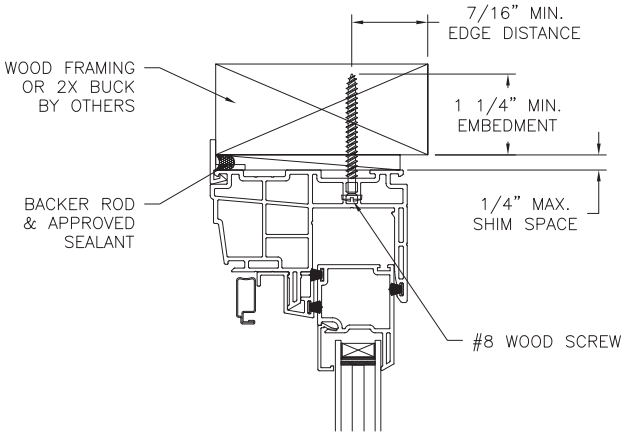

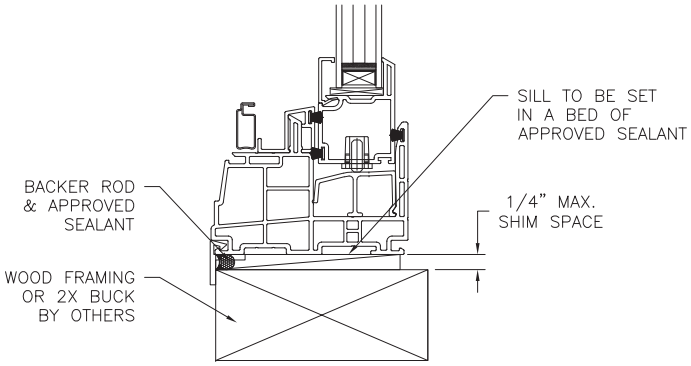

VERTICAL CROSS SECTION
WOOD FRAMING OR 2X BUCK INSTALLATION

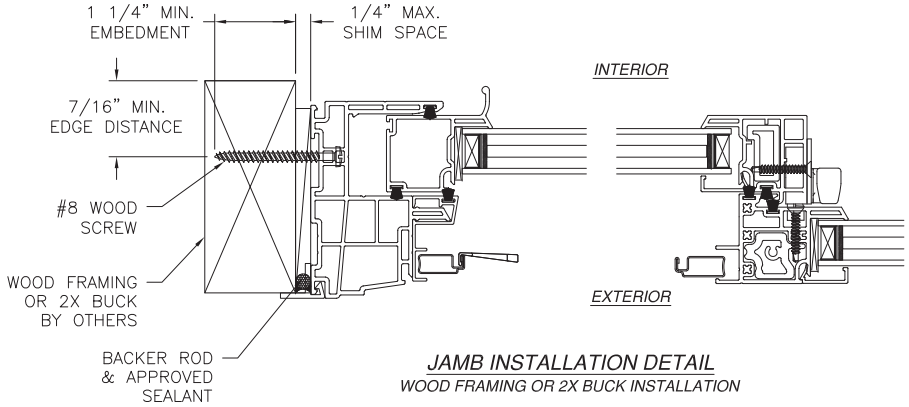

JAMB INSTALLATION DETAIL
WOOD FRAMING OR 2X BUCK INSTALLATION

NOTES:
1. *INTERIOR AND EXTERIOR FINISHES, BY OTHERS, NOT SHOWN FOR CLARITY.*
2. *PERIMETER AND JOINT SEALANT BY OTHERS TO BE DESIGNED IN ACCORDANCE WITH ASTM E2112*

SIGNED: 10/25/2023

MI WINDOWS AND DOORS LLC
650 MARKET STREET
GRATZ, PA 17030

SERIES 1630 HS REINFORCED
NON-IMPACT 72" X 53"
FLANGE INSTALLATION DETAILS

DRAWN: R.L.	DWG NO. 08-03000	REV A
SCALE NTS	DATE 11/30/16	SHEET 6 OF 13

L. ROBERTO LOMAS P.E.
208 7th Ave, INDIALANTIC, FL 32903
434-688-0609 rllomas@lrlomaspe.com

LUIS R. LOMAS LICENSE No. 62514 STATE OF FLORIDA PROFESSIONAL ENGINEER

Luis R. Lomas P.E.
FL No.: 62514

REVISIONS			
REV	DESCRIPTION	DATE	APPROVED
A	REVISED PER NEW CODE	10/25/2023	R.L.

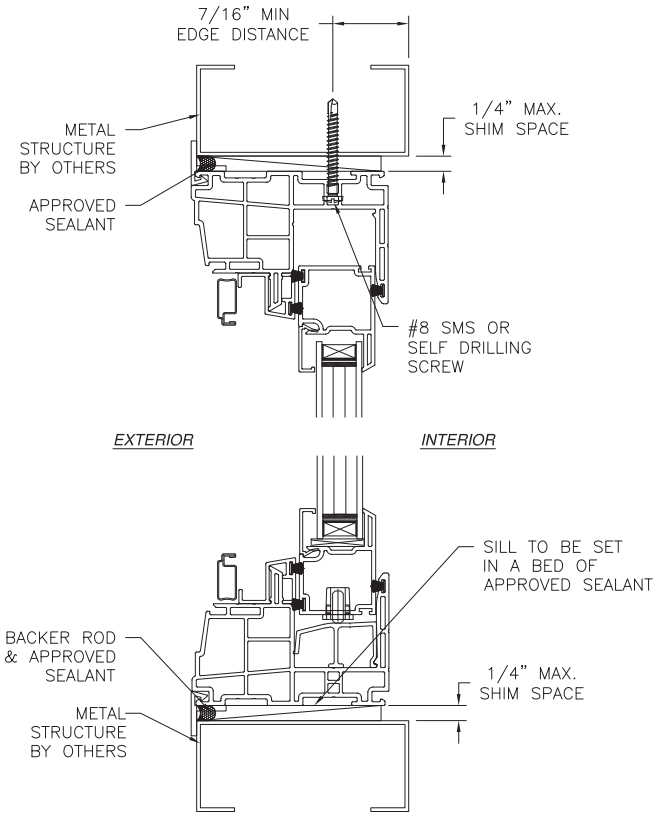

VERTICAL CROSS SECTION
METAL STRUCTURE INSTALLATION

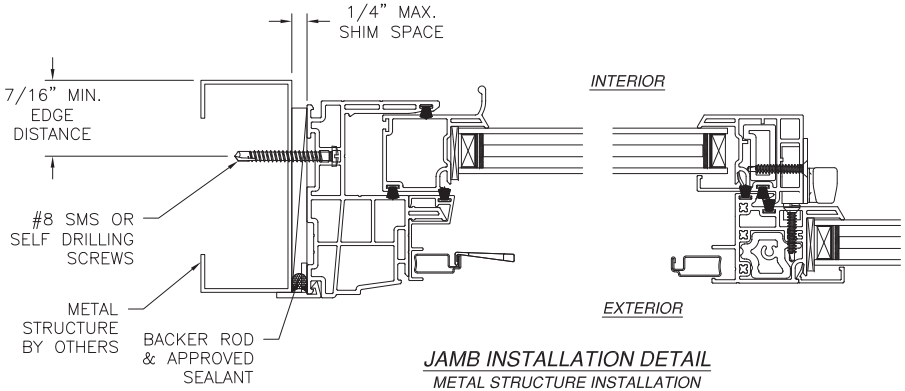

JAMB INSTALLATION DETAIL
METAL STRUCTURE INSTALLATION

NOTES:
1. *INTERIOR AND EXTERIOR FINISHES, BY OTHERS, NOT SHOWN FOR CLARITY.*
2. *PERIMETER AND JOINT SEALANT BY OTHERS TO BE DESIGNED IN ACCORDANCE WITH ASTM E2112*

SIGNED: 10/25/2023

MI WINDOWS AND DOORS LLC
650 MARKET STREET
GRATZ, PA 17030

SERIES 1630 HS REINFORCED
NON-IMPACT 72" X 53"
FLANGE INSTALLATION DETAILS

DRAWN:	DWG NO.	REV
R.L.	08-03000	A

SCALE	DATE	SHEET
NTS	11/30/16	7 OF 13

L. ROBERTO LOMAS P.E.
208 7th Ave, INDIALANTIC, FL 32903
434-688-0609 rllomas@lrlomaspe.com

LUIS R. LOMAS
LICENSE
No. 62514
STATE OF
FLORIDA
PROFESSIONAL ENGINEER

Luis R. Lomas P.E.
FL No.: 62514

REVISIONS			
REV	DESCRIPTION	DATE	APPROVED
A	REVISED PER NEW CODE	10/25/2023	R.L.

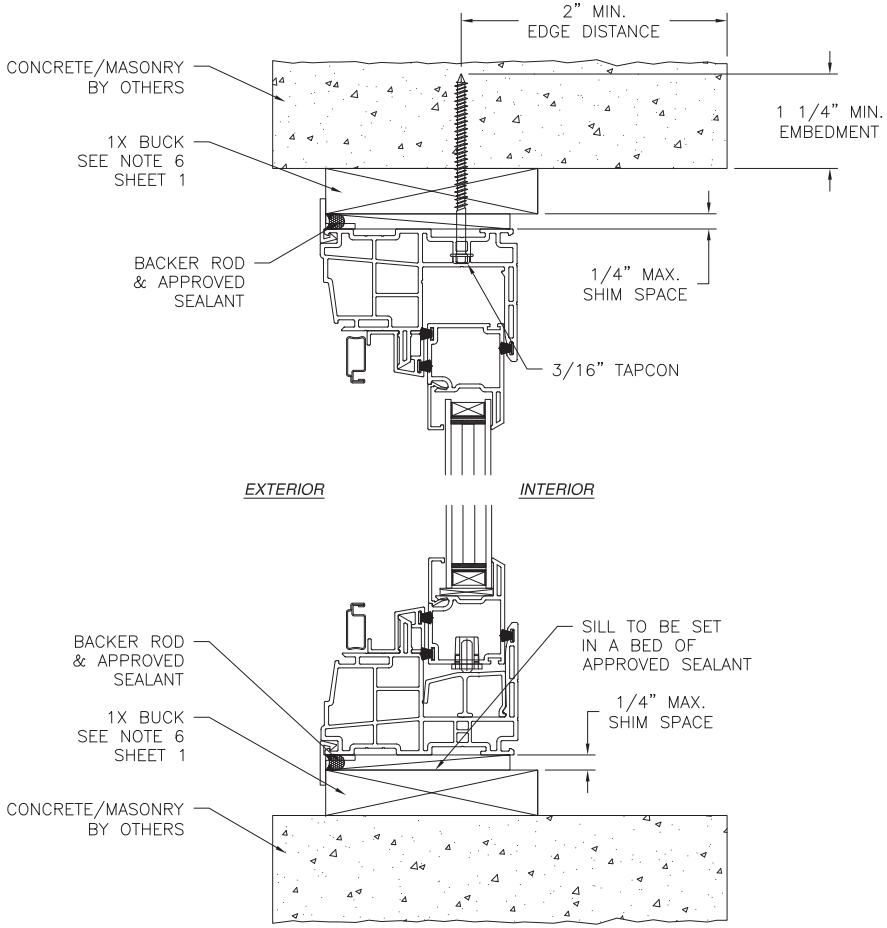

VERTICAL CROSS SECTION

CONCRETE/MASONRY WITH 1X BUCK INSTALLATION
FOR CONCRETE/MASONRY WITHOUT 1X BUCK REFER TO
JAMB INSTALLATION DETAIL

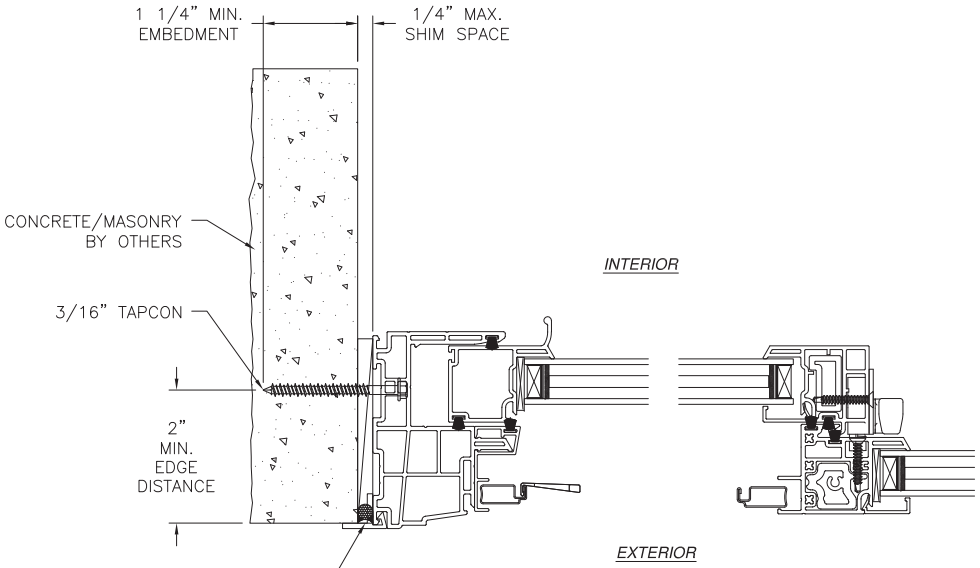

JAMB INSTALLATION DETAIL

CONCRETE/MASONRY WITHOUT 1X BUCK INSTALLATION
FOR CONCRETE/MASONRY INSTALLATION WITH 1X BUCK REFER TO
HEAD AND SILL INSTALLATION DETAILS

NOTES:

1. *INTERIOR AND EXTERIOR FINISHES, BY OTHERS, NOT SHOWN FOR CLARITY.*
2. *PERIMETER AND JOINT SEALANT BY OTHERS TO BE DESIGNED IN ACCORDANCE WITH ASTM E2112*

SIGNED: 10/25/2023

MI WINDOWS AND DOORS LLC
650 MARKET STREET
GRATZ, PA 17030

SERIES 1630 HS REINFORCED
NON-IMPACT 72" X 53"
FLANGE INSTALLATION DETAILS

DRAWN:	DWG NO.	REV
R.L.	08-03000	A

SCALE	DATE	SHEET
NTS	11/30/16	8 OF 13

L. ROBERTO LOMAS P.E.
208 7th Ave, INDIALANTIC, FL 32903
434-688-0609 rllomas@lrlomaspe.com

LUIS R. LOMAS LICENSE No. 62514 STATE OF FLORIDA PROFESSIONAL ENGINEER

Luis R. Lomas P.E.
FL No.: 62514

REVISIONS			
REV	DESCRIPTION	DATE	APPROVED
A	REVISED PER NEW CODE	10/25/2023	R.L.

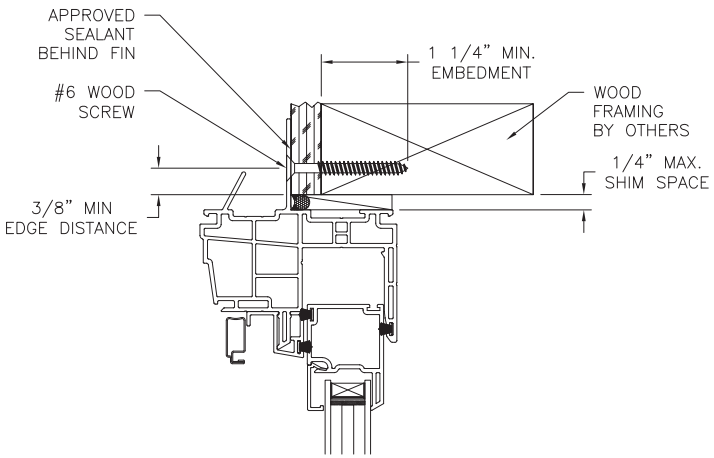

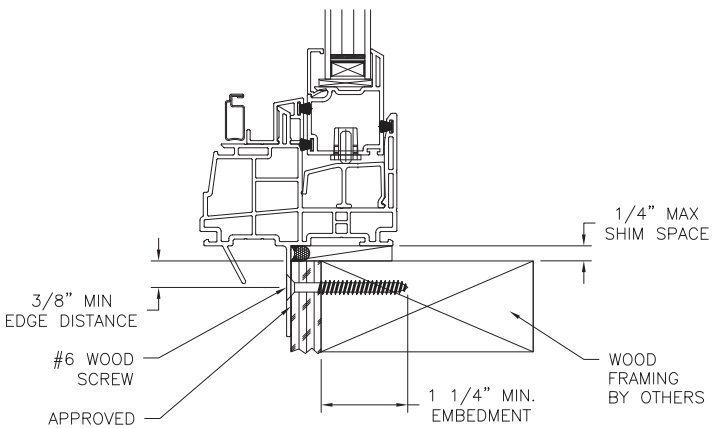

VERTICAL CROSS SECTION
WOOD FRAMING OR 2X BUCK INSTALLATION

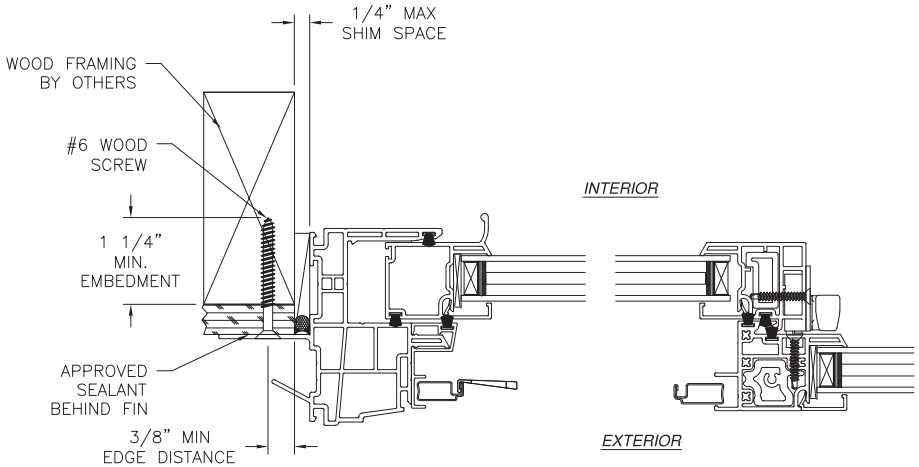

JAMB INSTALLATION DETAIL
WOOD FRAMING OR 2X BUCK INSTALLATION

NOTES:
1. *INTERIOR AND EXTERIOR FINISHES, BY OTHERS, NOT SHOWN FOR CLARITY.*
2. *PERIMETER AND JOINT SEALANT BY OTHERS TO BE DESIGNED IN ACCORDANCE WITH ASTM E2112*

SIGNED: 10/25/2023

MI WINDOWS AND DOORS LLC
650 MARKET STREET
GRATZ, PA 17030

SERIES 1630 HS REINFORCED
NON-IMPACT 72" X 53"
FIN WITH J CHANNEL INSTALLATION DETAILS

DRAWN:	DWG NO.	REV
R.L.	08-03000	A

SCALE	DATE	SHEET
NTS	11/30/16	9 OF 13

L. ROBERTO LOMAS P.E.
208 7th Ave, INDIALANTIC, FL 32903
434-688-0609 rllomas@lrlomaspe.com

LUIS R. LOMAS LICENSE No. 62514 STATE OF FLORIDA PROFESSIONAL ENGINEER

Luis R. Lomas P.E.
FL No.: 62514

REVISIONS			
REV	DESCRIPTION	DATE	APPROVED
A	REVISED PER NEW CODE	10/25/2023	R.L.

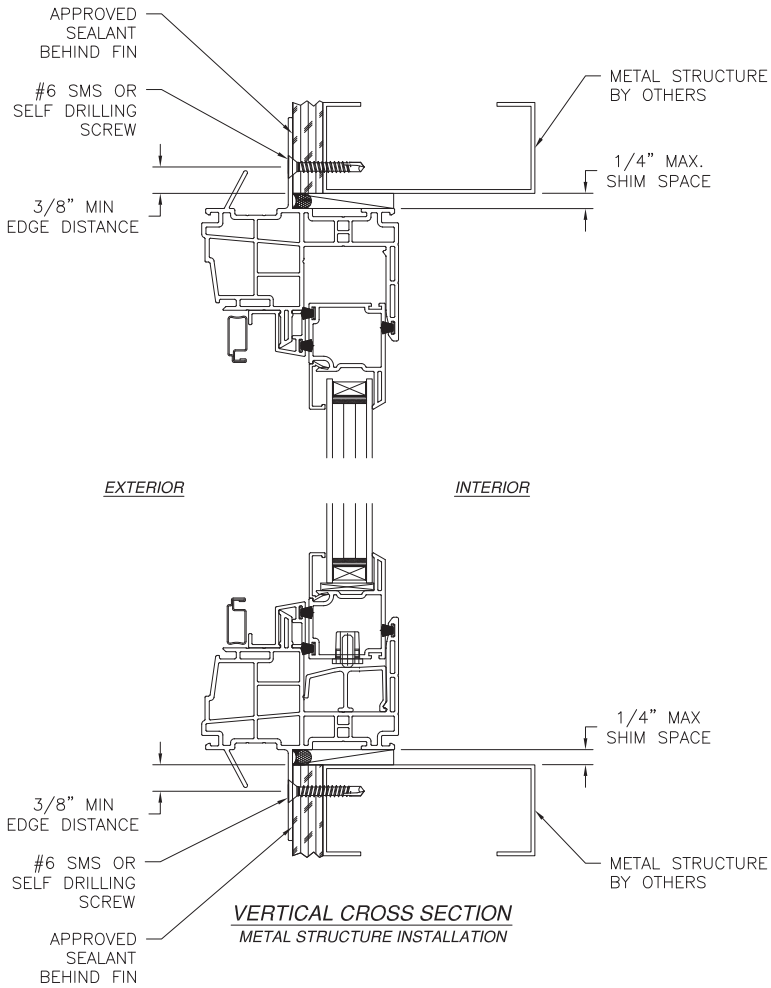

VERTICAL CROSS SECTION
METAL STRUCTURE INSTALLATION

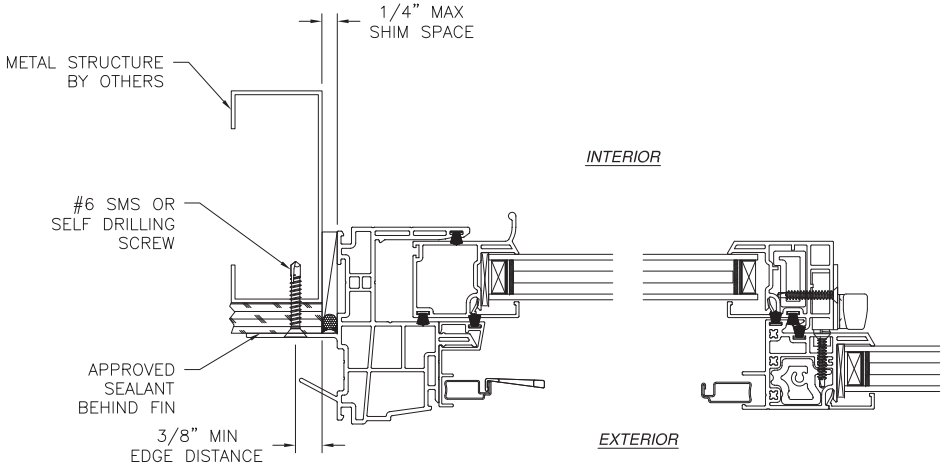

JAMB INSTALLATION DETAIL
METAL STRUCTURE INSTALLATION

NOTES:
1. *INTERIOR AND EXTERIOR FINISHES, BY OTHERS, NOT SHOWN FOR CLARITY.*
2. *PERIMETER AND JOINT SEALANT BY OTHERS TO BE DESIGNED IN ACCORDANCE WITH ASTM E2112*

SIGNED: 10/25/2023

MI WINDOWS AND DOORS LLC
650 MARKET STREET
GRATZ, PA 17030

SERIES 1630 HS REINFORCED
NON-IMPACT 72" X 53"
FIN WITH J CHANNEL INSTALLATION DETAILS

DRAWN: R.L.	DWG NO. 08-03000	REV A
SCALE NTS	DATE 11/30/16	SHEET 10 OF 13

L. ROBERTO LOMAS P.E.
208 7th Ave, INDIALANTIC, FL 32903
434-688-0609 rllomas@lrlomaspe.com

LUIS R. LOMAS LICENSE No. 62514 STATE OF FLORIDA PROFESSIONAL ENGINEER

Luis R. Lomas P.E.
FL No.: 62514

REVISIONS			
REV	DESCRIPTION	DATE	APPROVED
A	REVISED PER NEW CODE	10/25/2023	R.L.

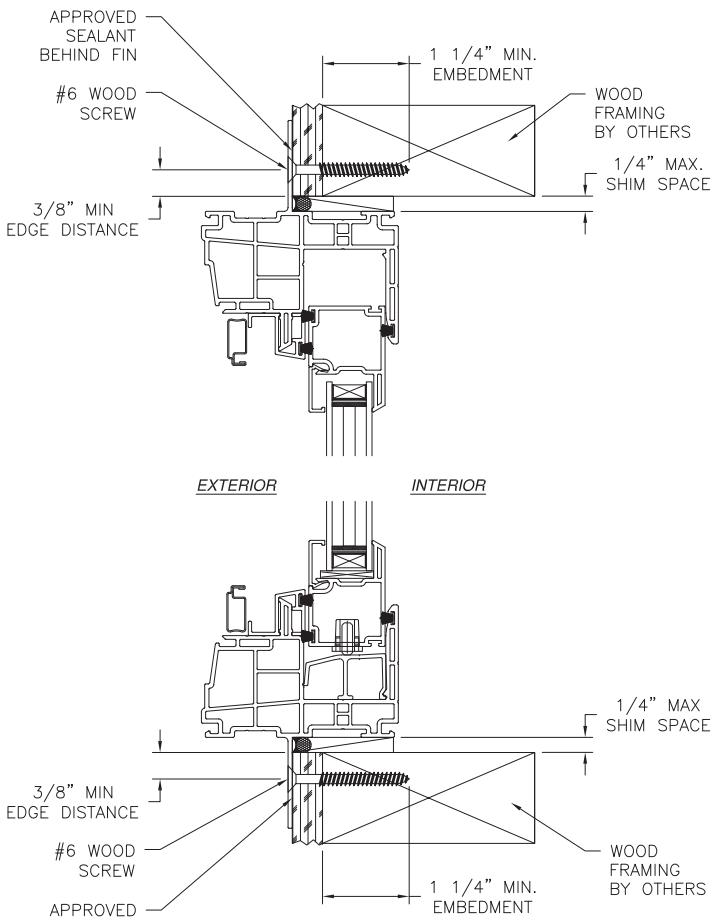

VERTICAL CROSS SECTION

WOOD FRAMING OR 2X BUCK INSTALLATION

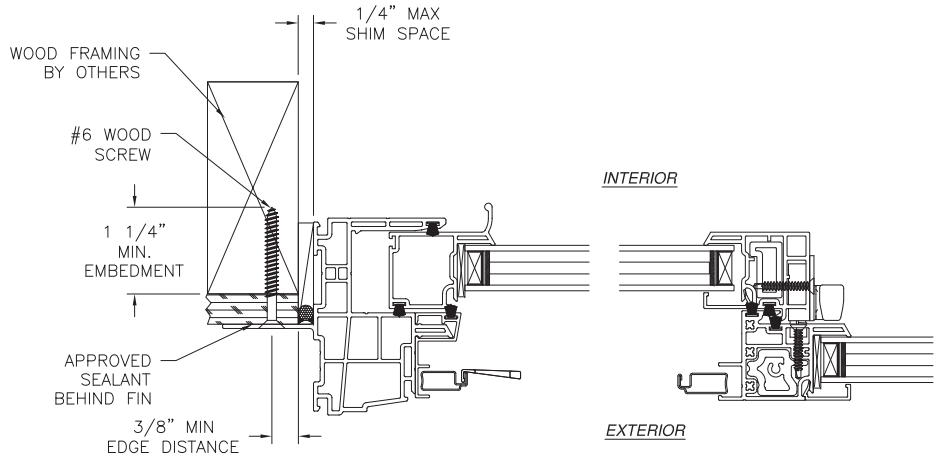

JAMB INSTALLATION DETAIL

WOOD FRAMING OR 2X BUCK INSTALLATION

NOTES:

1. *INTERIOR AND EXTERIOR FINISHES, BY OTHERS, NOT SHOWN FOR CLARITY.*
2. *PERIMETER AND JOINT SEALANT BY OTHERS TO BE DESIGNED IN ACCORDANCE WITH ASTM E2112*

SIGNED: 10/25/2023

MI WINDOWS AND DOORS LLC
650 MARKET STREET
GRATZ, PA 17030

SERIES 1630 HS REINFORCED
NON-IMPACT 72" X 53"
FIN INSTALLATION DETAILS

DRAWN:	DWG NO.	REV
R.L.	08-03000	A

SCALE	DATE	SHEET
NTS	11/30/16	11 OF 13

L. ROBERTO LOMAS P.E.
208 7th Ave, INDIALANTIC, FL 32903
434-688-0609 rllomas@lrlomaspe.com

LUIS R. LOMAS LICENSE No. 62514 STATE OF FLORIDA PROFESSIONAL ENGINEER

Luis R. Lomas P.E.
FL No.: 62514

REVISIONS			
REV	DESCRIPTION	DATE	APPROVED
A	REVISED PER NEW CODE	10/25/2023	R.L.

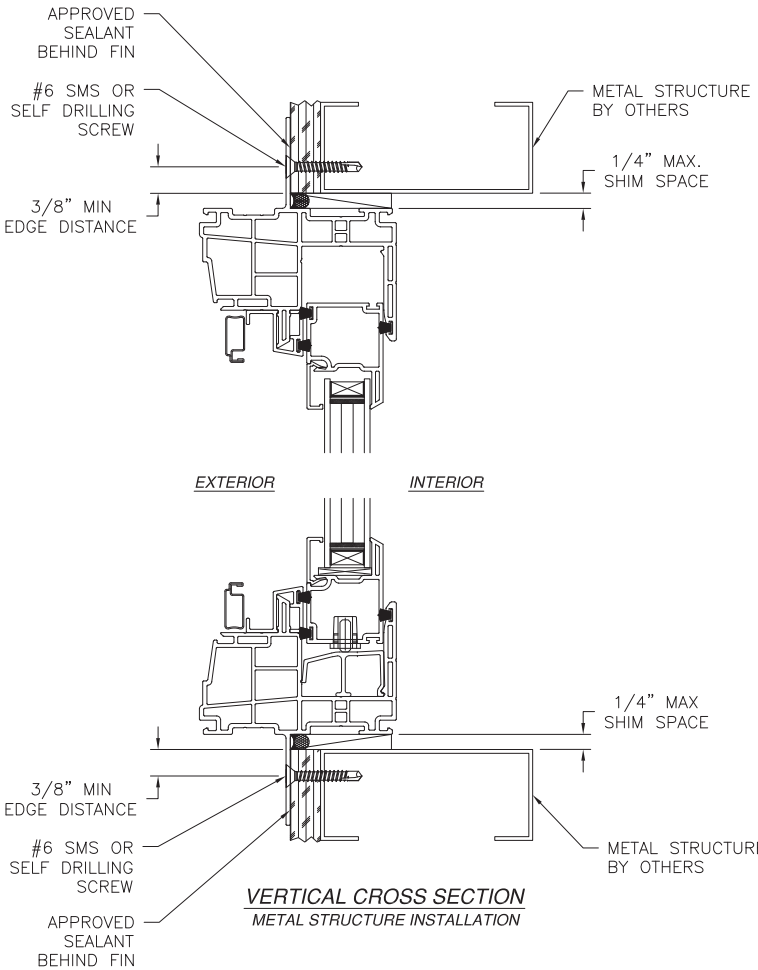

VERTICAL CROSS SECTION
METAL STRUCTURE INSTALLATION

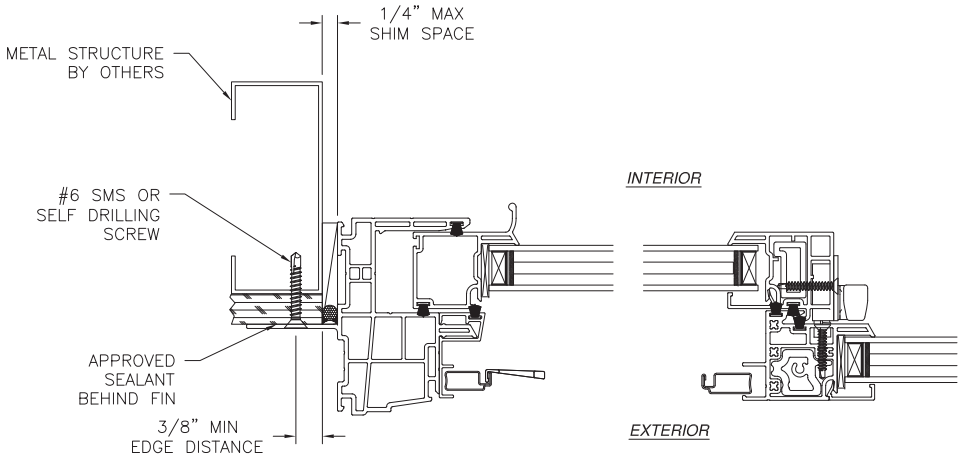

JAMB INSTALLATION DETAIL
METAL STRUCTURE INSTALLATION

NOTES:
1. INTERIOR AND EXTERIOR FINISHES, BY OTHERS, NOT SHOWN FOR CLARITY.
2. PERIMETER AND JOINT SEALANT BY OTHERS TO BE DESIGNED IN ACCORDANCE WITH ASTM E2112

SIGNED: 10/25/2023

MI WINDOWS AND DOORS LLC
650 MARKET STREET
GRATZ, PA 17030

SERIES 1630 HS REINFORCED
NON-IMPACT 72" X 53"
FIN INSTALLATION DETAILS

DRAWN: R.L.	DWG NO. 08-03000	REV A
SCALE NTS	DATE 11/30/16	SHEET 12 OF 13

L. ROBERTO LOMAS P.E.
208 7th Ave, INDIALANTIC, FL 32903
434-688-0609 rllomas@lrlomaspe.com

LUIS R. LOMAS LICENSE No. 62514 STATE OF FLORIDA PROFESSIONAL ENGINEER

Luis R. Lomas P.E.
FL No.: 62514

REVISIONS			
REV	DESCRIPTION	DATE	APPROVED
A	REVISED PER NEW CODE	10/25/2023	R.L.

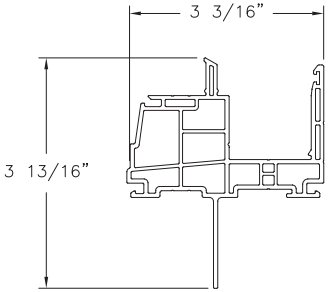

MAIN FRAME FIN (V-1019)
RIGID VINYL PVC

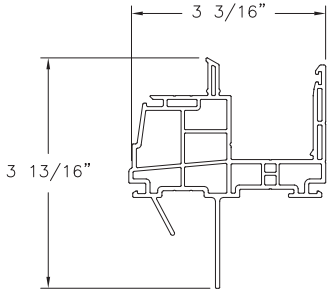

MAIN FRAME FIN W/ J CHANNEL (V-1018)
RIGID VINYL PVC

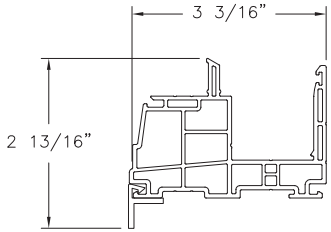

MAIN FRAME FINLESS FLANGE (V-1022)
RIGID VINYL PVC

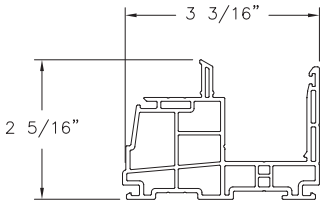

MAIN FRAME FINLESS (V-1020)
RIGID VINYL PVC

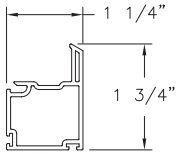

SASH, HORIZONTAL RAIL (V-670)
RIGID VINYL PVC

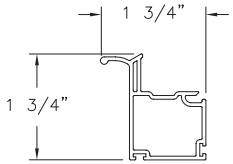

SASH, PULL RAIL (V-672)
RIGID VINYL PVC

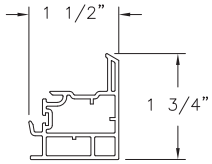

SASH, LOCK RAIL (V-675)
RIGID VINYL PVC

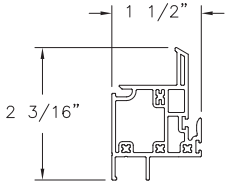

FIXED MEETING RAIL (V-1016)
RIGID VINYL PVC

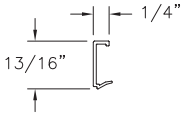

GLAZING BEAD (V-904)
RIGID VINYL PVC

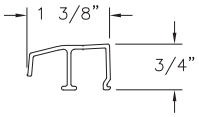

SINGLE SLIDE ROLLER TRACK (M-2345)
ALUMINUM 6063-T5

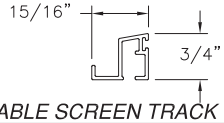

OPERABLE SCREEN TRACK W/O LEG (M-2341)
ALUMINUM 6063-T5

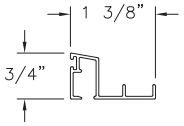

OPERABLE SCREEN TRACK (M-2340)
ALUMINUM 6063-T5

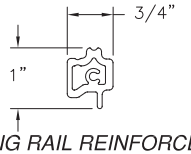

MEETING RAIL REINFORCEMENT (M-2343)
ALUMINUM 6063-T5

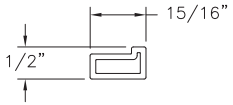

LOCK RAIL REINFORCEMENT (M-2115)
ALUMINUM 6063-T5

SIGNED: 10/25/2023

MI WINDOWS AND DOORS LLC
650 MARKET STREET
GRATZ, PA 17030

SERIES 1630 HS REINFORCED
NON-IMPACT 72" X 53"
COMPONENTS

DRAWN: R.L.	DWG NO. 08-03000	REV A
SCALE NTS	DATE 11/30/16	SHEET 13 OF 13

L. ROBERTO LOMAS P.E.
208 7th Ave, INDIALANTIC, FL 32903
434-688-0609 rllomas@lrlomaspe.com

Luis R. Lomas P.E.
FL No.: 62514

NOTES:

1. Installations depicted satisfy the requirements of the Florida Building Code, Building 8th Edition (2023) for design wind pressures and overall sizes noted.
2. Wood bucks, wood framing, steel stud framing, concrete and concrete masonry are by others and shall be designed by the architect or engineer of record to resist the loads imparted to them.
3. Wood buck strips and wood frames are assumed S–P–F (G=0.42) or denser. Buck width shall be greater than the window frame width. Tapered or partial width buck strips are not allowed.
4. Concrete masonry installations are assumed at least ASTM C90 normal weight hollow masonry units with a 1–1/4" wall thickness or normal weight concrete with a minimum compressive strength of f'c = 3,000 psi.
5. Metal stud frames are assumed to be a minimum 18 gauge 33 KSI steel.
6. Wood screws shall be corrosion resistant and meet the requirements of ANSI/ASME B18.6.1
7. Tapcon masonry anchors shall have a minimum embedment of 1–1/2" or full penetration of concrete masonry unit shell. They shall also have a minimum of 2" edge distance. Install concrete masonry anchors per manufacturer's installation instructions.
8. TEKS screws shall be corrosion resistant and shall be ASTM A510 Grade 1018 or equivalent.
9. Maximum permitted shim thickness is 1/4". Shims shall be non–compressible and load bearing type. Every through–frame fastener shall have a shim.
10. Products are not impact resistant and require approved protection devices if used in wind–borne debris regions.
11. Not for use in High Velocity Hurricane Zone (HVHZ).

CONTENTS:

Sheet 1	Notes
Sheets 2–3	Elevations
Sheet 4	Fin Install to Wood
Sheet 5	Fin Install to Steel Stud
Sheet 6	Frame Install to Wood
Sheet 7	Frame Install to Steel Stud
Sheets 8–9	Frame Install to Concrete or CMU
Sheet 10	Installation Accessories

This item has been digitally signed and sealed by Michael D. Stremmel, PE on the date adjacent to the seal. Printed copies of this document are not considered signed and sealed and the signature must be verified on any electronic copies.

Michael D. Stremmel, PE
FL PE 65868
FL REG 37122
1410 Eden Road
York, PA 17402
717-916-6300

MICHAEL D. STREMMEL
LICENSE
No. 65868
STATE OF FLORIDA
PROFESSIONAL ENGINEER

2023.12.12 06:39:21 -05'00'

1630 Sliding Window - non Impact
Notes

MI Windows and Doors
702 W. Market St.
Gratz, PA 17030

Drawing No.: 27488.09-1008
Project No.: 27488.09-107-16
Drawn By: MDS REV: - Date:12/12/23

Scale: NTS | Sheet 1 of 10

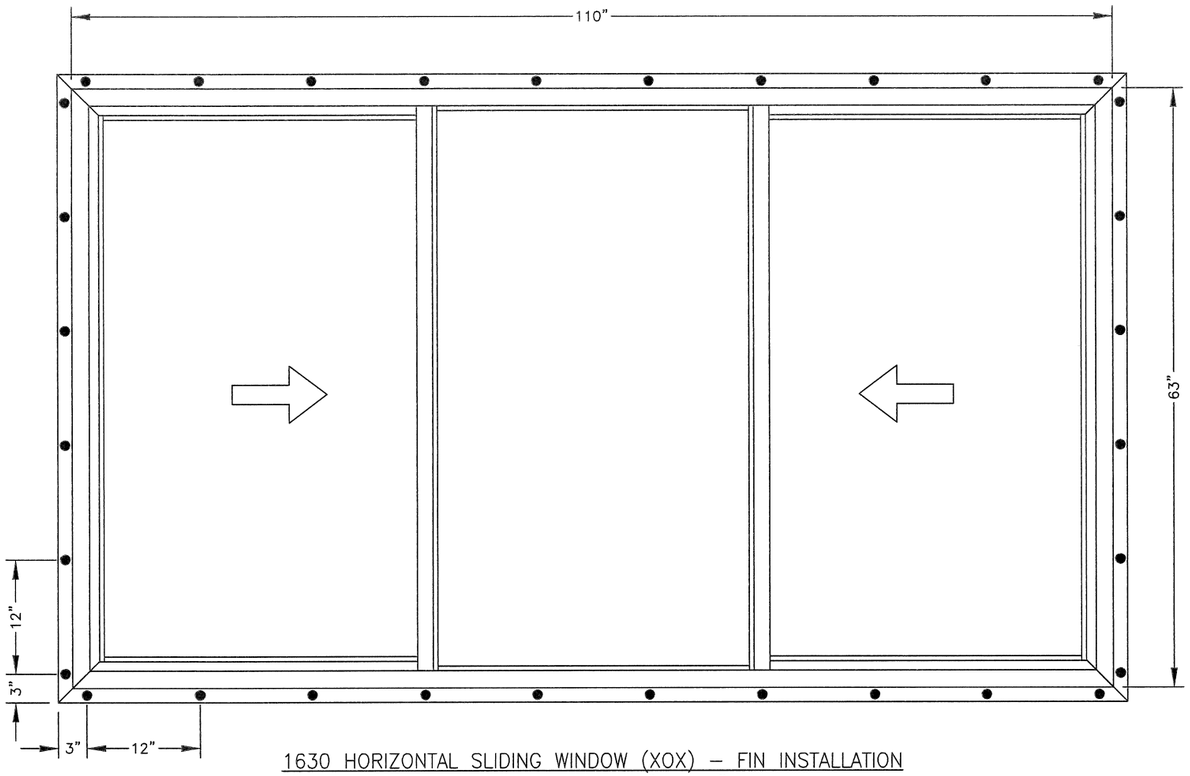

1630 HORIZONTAL SLIDING WINDOW (XOX) – FIN INSTALLATION
MAXIMUM SIZE 110" X 63"
DESIGN PRESSURE +/– 35 PSF

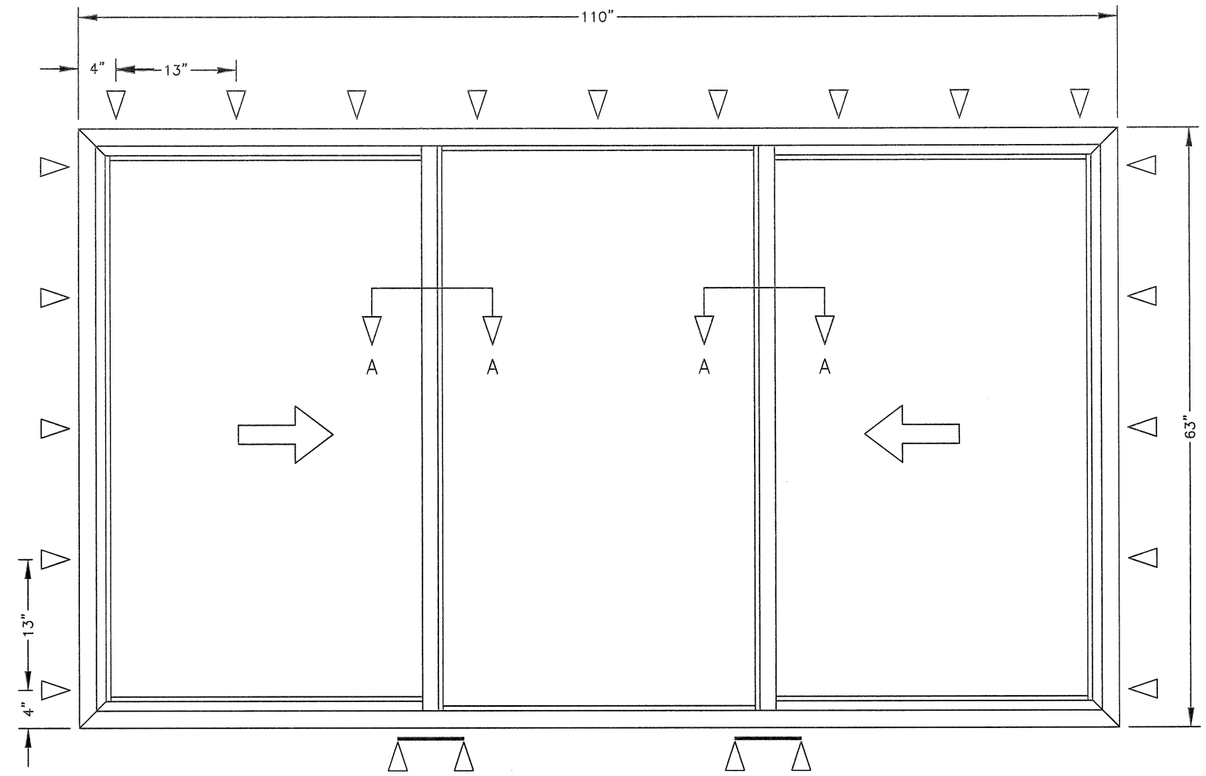

1630 HORIZONTAL SLIDING WINDOW (XOX) – FINLESS INSTALLATION
MAXIMUM SIZE 110" X 63"
DESIGN PRESSURE +/– 50 PSF

● FIN ANCHOR
SEE SHEETS 4 TO 5

▽ FRAME ANCHOR
SEE SHEETS 6 TO 9

INSTALLATION CLIP

This item has been digitally signed and sealed by Michael D. Stremmel, PE on the date adjacent to the seal. Printed copies of this document are not considered signed and sealed and the signature must be verified on any electronic copies.

Michael D. Stremmel, PE
FL PE 65868
FL REG 37122
1410 Eden Road
York, PA 17402
717-916-6300

MICHAEL D. STREMMEL
LICENSE
No. 65868
STATE OF FLORIDA
PROFESSIONAL ENGINEER

2023.12.12 06:39:21 -05'00'

1630 Sliding Window - non Impact
Elevations

MI Windows and Doors
702 W. Market St.
Gratz, PA 17030

Drawing No.: 27488.09-1008
Project No.: 27488.09-107-16
Drawn By: MDS REV: - Date:12/12/23

Scale: NTS | Sheet 2 of 10

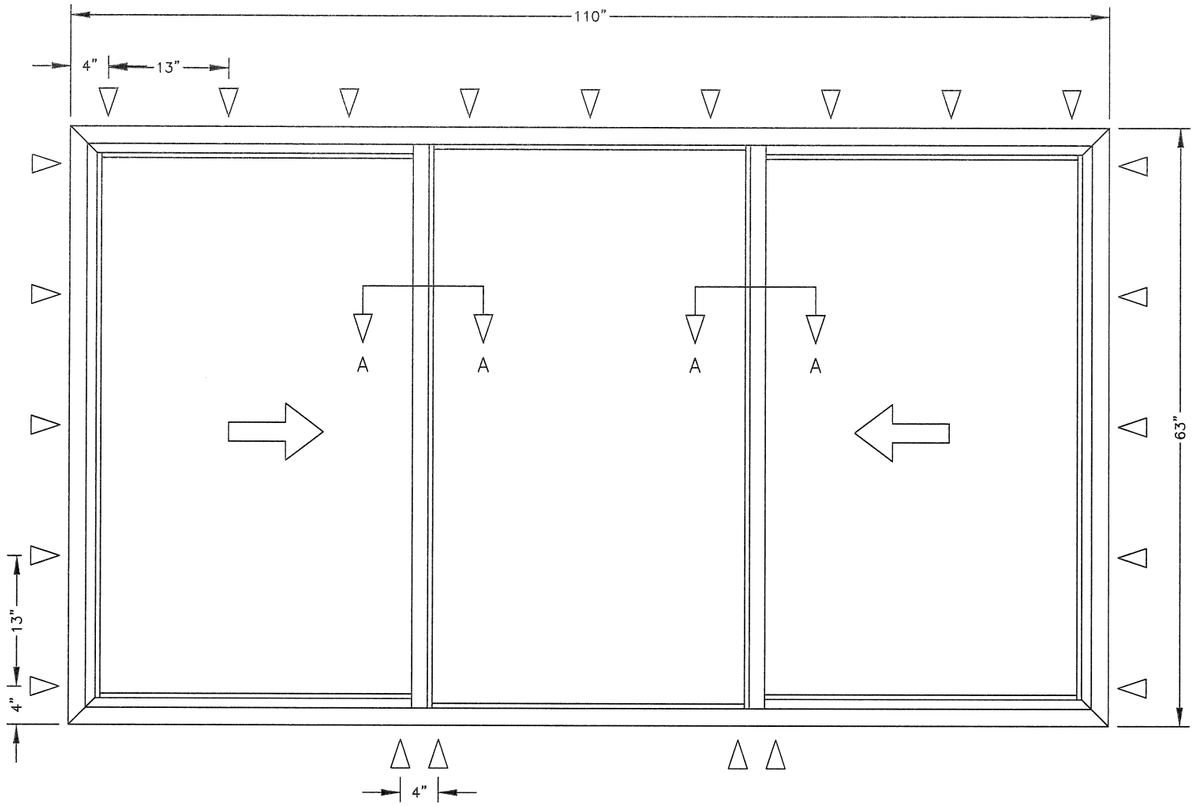

1630 HORIZONTAL SLIDING WINDOW (XOX) – FINLESS INSTALLATION
MAXIMUM SIZE 110" X 63"
DESIGN PRESSURE +/– 50 PSF

▽ FRAME ANCHOR
SEE SHEETS 6 TO 9

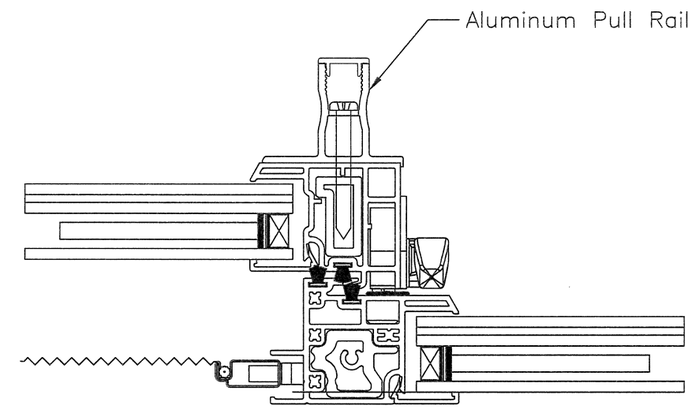

A–A SECTION AT MEETING STILE

DESIGN PRESSURE +/– 50 PSF ONLY

This item has been digitally signed and sealed by Michael D. Stremmel, PE on the date adjacent to the seal. Printed copies of this document are not considered signed and sealed and the signature must be verified on any electronic copies.

Michael D. Stremmel, PE
FL PE 65868
FL REG 37122
1410 Eden Road
York, PA 17402
717-916-6300

MICHAEL D. STREMMEL
LICENSE
No. 65868
STATE OF FLORIDA
PROFESSIONAL ENGINEER

2023.12.12 06:39:21 -05'00'

1630 Sliding Window - non Impact
Elevations

MI Windows and Doors
702 W. Market St.
Gratz, PA 17030

Drawing No.: 27488.09-1008
Project No.: 27488.09-107-16
Drawn By: MDS REV: - Date:12/12/23

Scale: NTS | Sheet 3 of 10

Note:
Waterproofing and interior finishes by others. Not shown for clarity.

HEAD

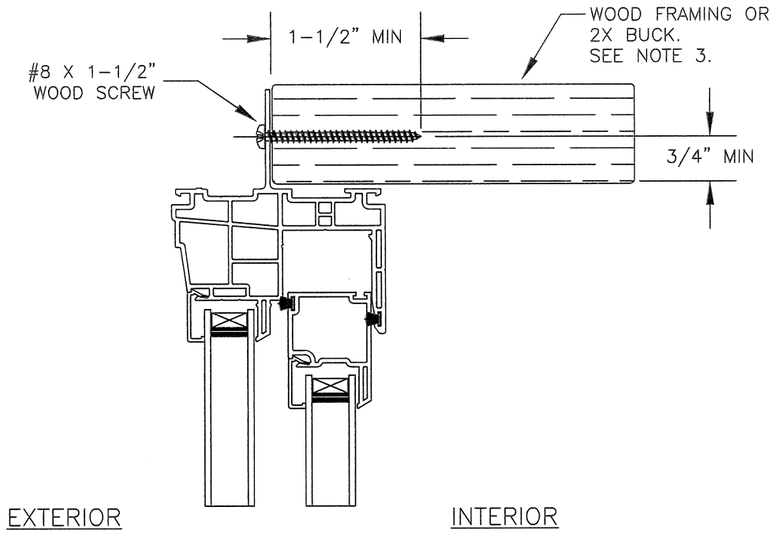

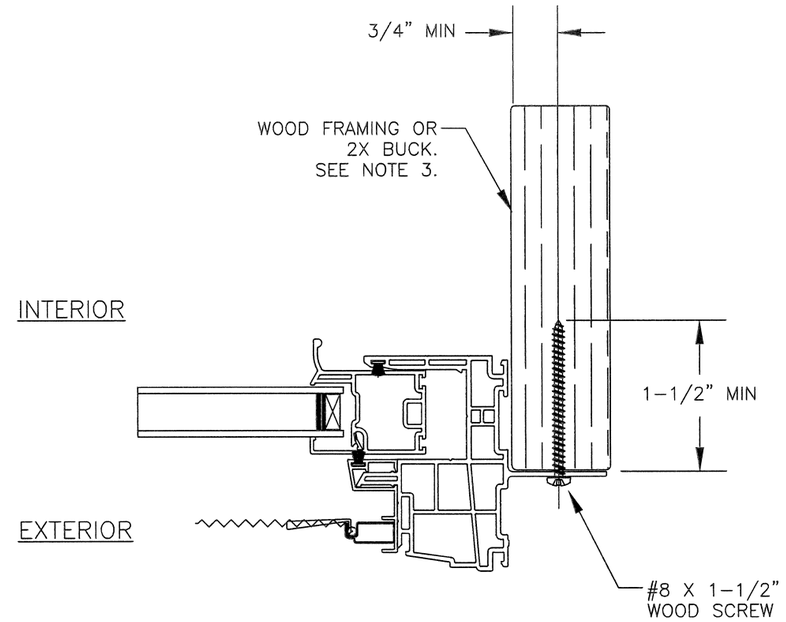

JAMB

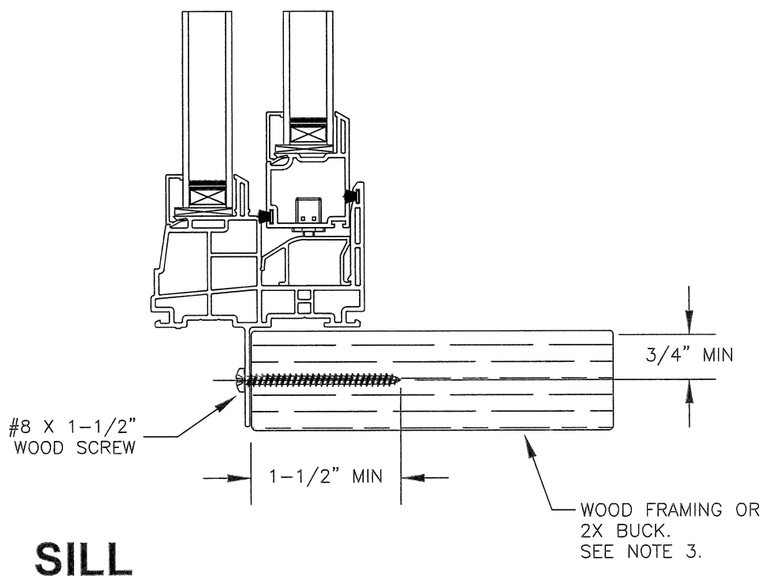

SILL

This item has been digitally signed and sealed by Michael D. Stremmel, PE on the date adjacent to the seal. Printed copies of this document are not considered signed and sealed and the signature must be verified on any electronic copies.

Michael D. Stremmel, PE
FL PE 65868
FL REG 37122
1410 Eden Road
York, PA 17402
717-916-6300

MICHAEL D. STREMMEL
LICENSE
No. 65868
STATE OF FLORIDA
PROFESSIONAL ENGINEER

2023.12.12 06:39:21 -05'00'

1630 Sliding Window - non Impact
Fin Installation to Wood

MI Windows and Doors
702 W. Market St.
Gratz, PA 17030

Drawing No.: 27488.09-1008
Project No.: 27488.09-107-16
Drawn By: MDS REV: - Date:12/12/23

Scale: NTS | Sheet 4 of 10

Note:
Waterproofing and interior finishes by others. Not shown for clarity.

HEAD

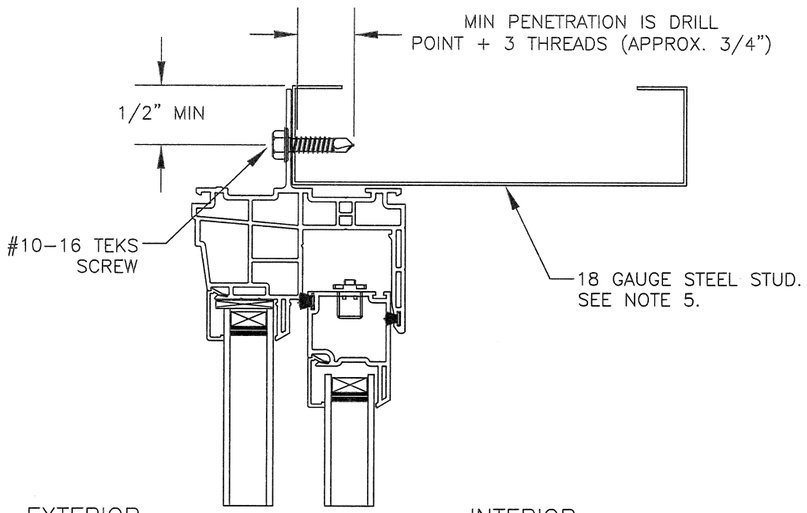

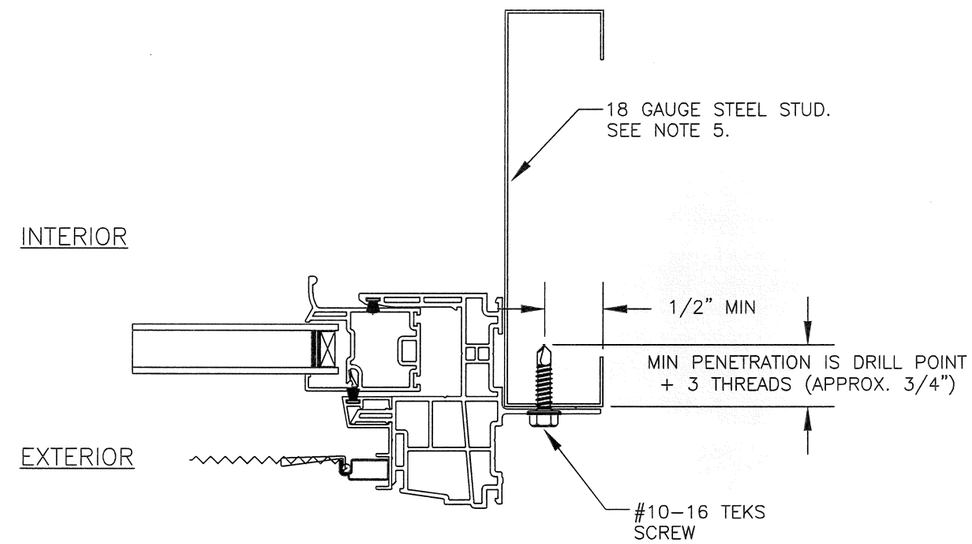

JAMB

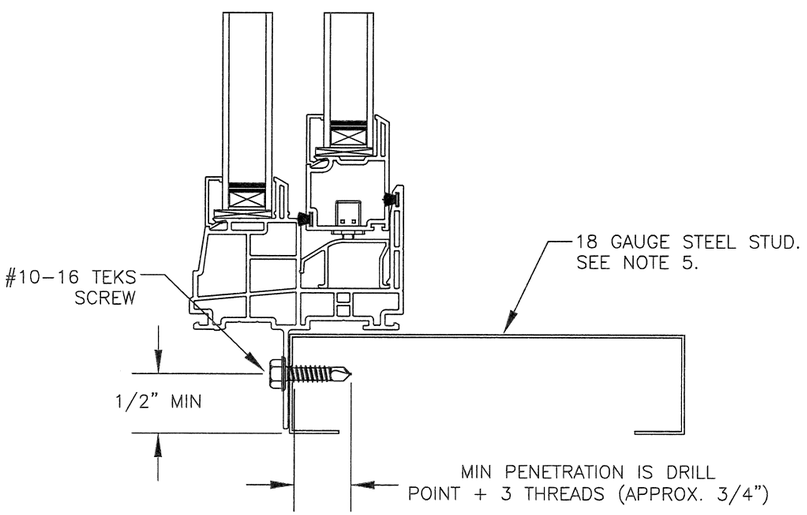

SILL

This item has been digitally signed and sealed by Michael D. Stremmel, PE on the date adjacent to the seal. Printed copies of this document are not considered signed and sealed and the signature must be verified on any electronic copies.

Michael D. Stremmel, PE
FL PE 65868
FL REG 37122
1410 Eden Road
York, PA 17402
717-916-6300

MICHAEL D. STREMMEL LICENSE No. 65868 STATE OF FLORIDA PROFESSIONAL ENGINEER

2023.12.12 06:39:21 -05'00'

1630 Sliding Window - non Impact
Fin Installation to Steel Stud

MI Windows and Doors
702 W. Market St.
Gratz, PA 17030

Drawing No.: 27488.09-1008
Project No.: 27488.09-107-16
Drawn By: MDS REV: - Date:12/12/23

Scale: NTS

Sheet 5 of 10

Note:
Waterproofing and interior finishes by others. Not shown for clarity.

HEAD

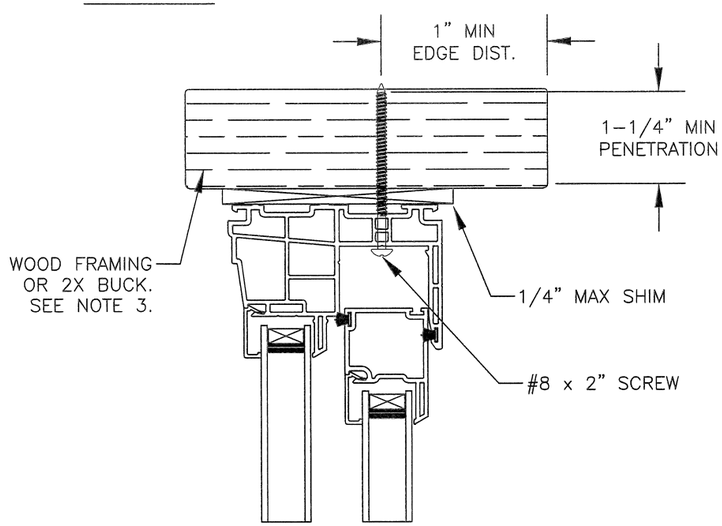

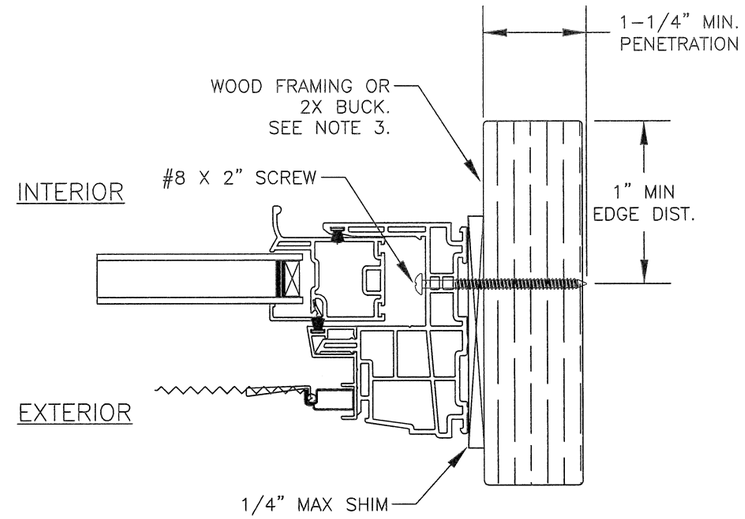

JAMB

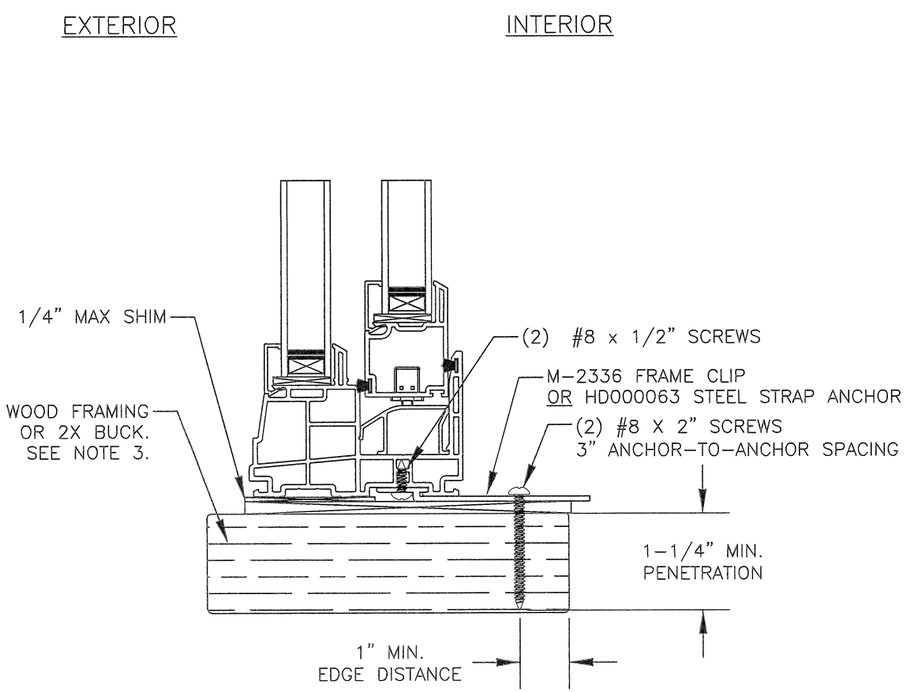

SILL (ANCHOR PLATE)

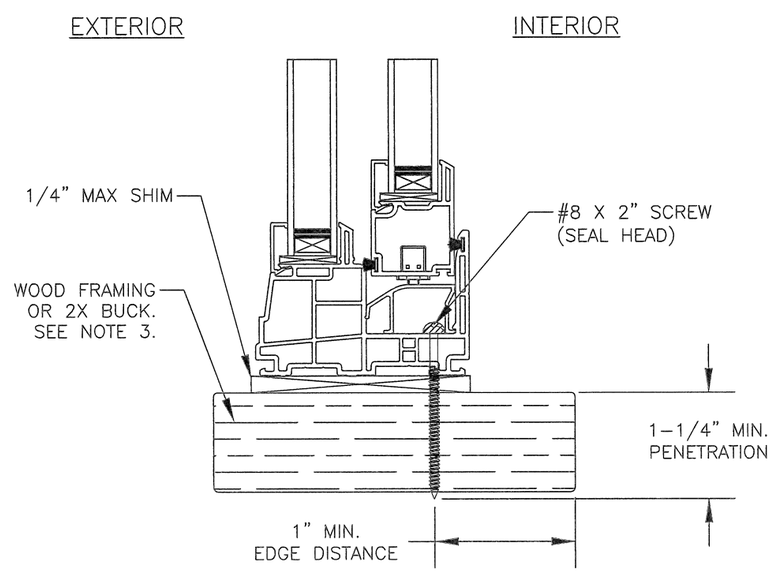

SILL (THROUGH FRAME)

This item has been digitally signed and sealed by Michael D. Stremmel, PE on the date adjacent to the seal. Printed copies of this document are not considered signed and sealed and the signature must be verified on any electronic copies.

Michael D. Stremmel, PE
FL PE 65868
FL REG 37122
1410 Eden Road
York, PA 17402
717-916-6300

MICHAEL D. STREMMEL
LICENSE
No. 65868
STATE OF FLORIDA
PROFESSIONAL ENGINEER

2023.12.12 06:39:21 -05'00'

1630 Sliding Window - non Impact
Frame Installation to Wood

MI Windows and Doors
702 W. Market St.
Gratz, PA 17030

Drawing No.: 27488.09-1008
Project No.: 27488.09-107-16
Drawn By: MDS REV: - Date:12/12/23

Scale: NTS | Sheet 6 of 10

Note:
Waterproofing and interior finishes by others. Not shown for clarity.

HEAD

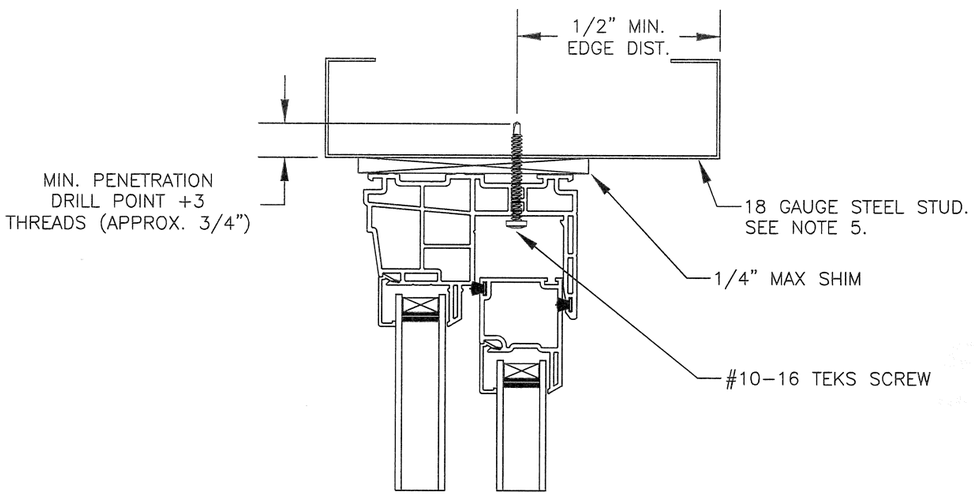

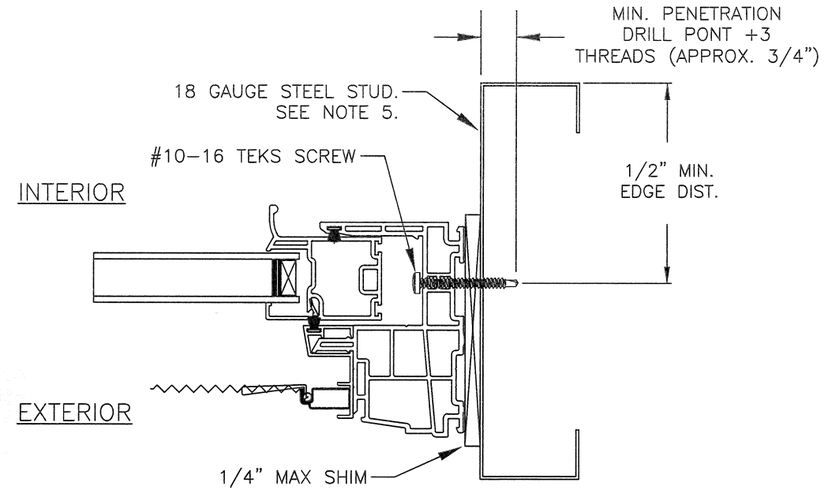

JAMB

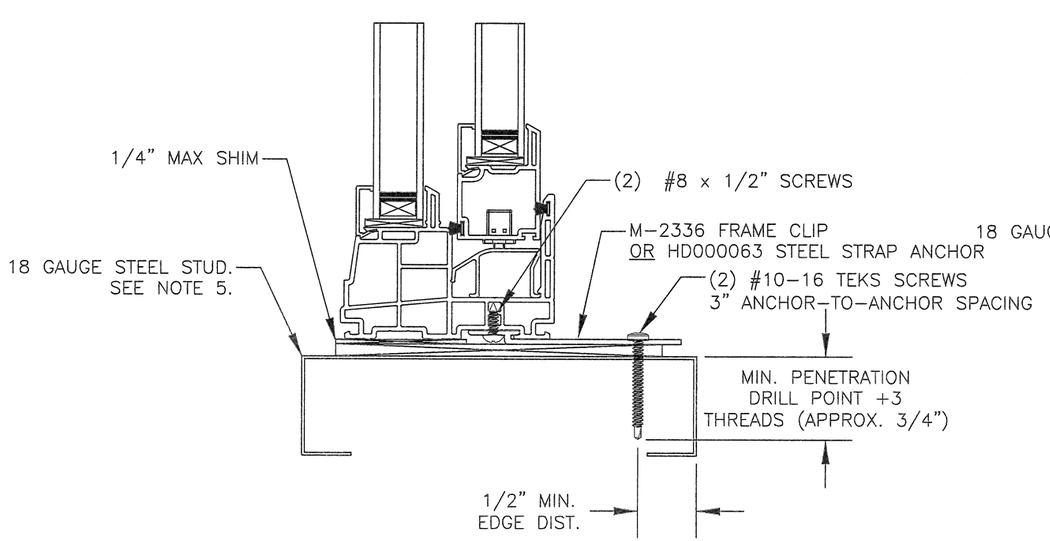

SILL (ANCHOR PLATE)

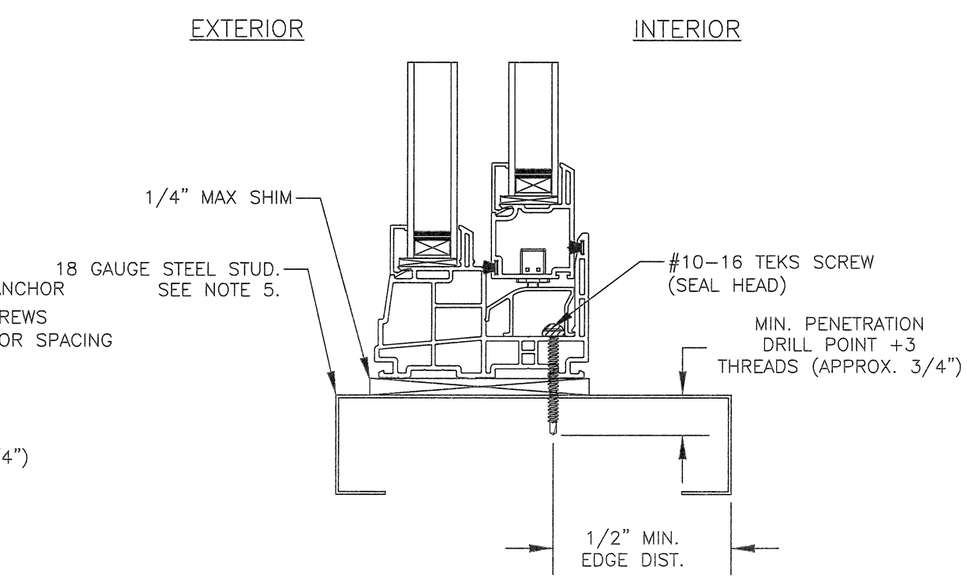

SILL (THROUGH FRAME)

This item has been digitally signed and sealed by Michael D. Stremmel, PE on the date adjacent to the seal. Printed copies of this document are not considered signed and sealed and the signature must be verified on any electronic copies.

Michael D. Stremmel, PE
FL PE 65868
FL REG 37122
1410 Eden Road
York, PA 17402
717-916-6300

MICHAEL D. STREMMEL
LICENSE
No. 65868
STATE OF FLORIDA
PROFESSIONAL ENGINEER

2023.12.12 06:39:21 -05'00'

1630 Sliding Window - non Impact
Frame Installation to Steel Stud

MI Windows and Doors
702 W. Market St.
Gratz, PA 17030

Drawing No.: 27488.09-1008
Project No.: 27488.09-107-16
Drawn By: MDS REV: - Date:12/12/23

Scale: NTS | Sheet 7 of 10

Note:
Waterproofing and interior finishes by others. Not shown for clarity.

HEAD

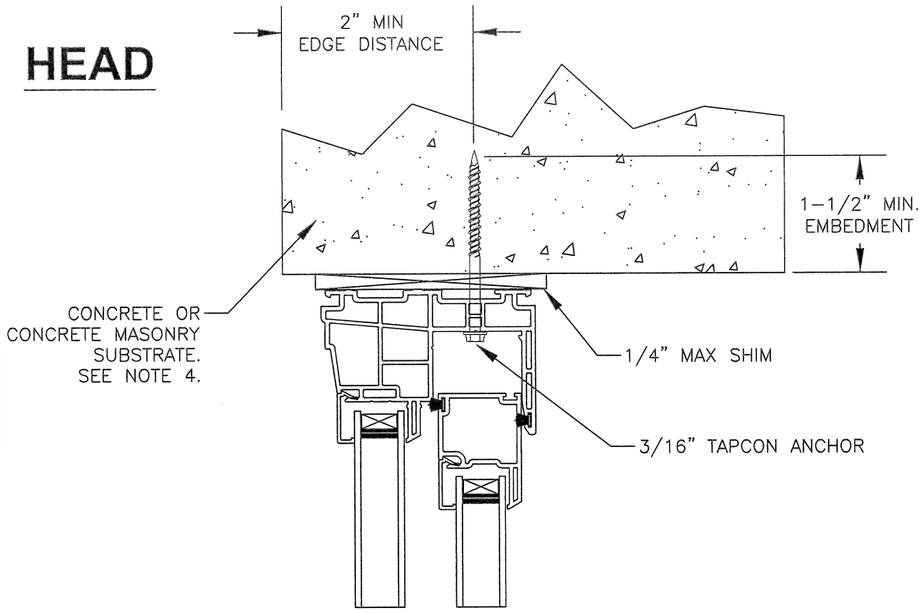

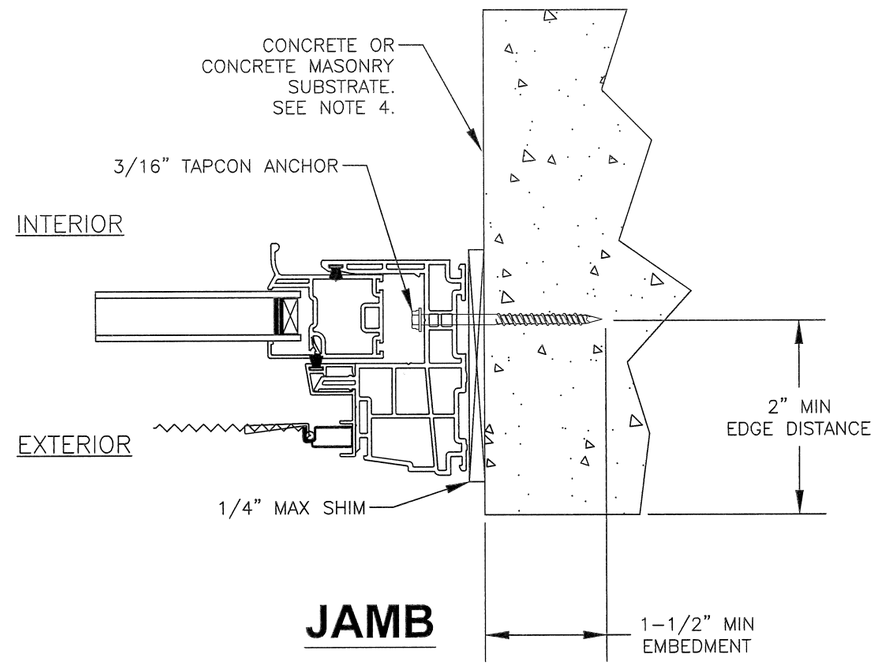

JAMB

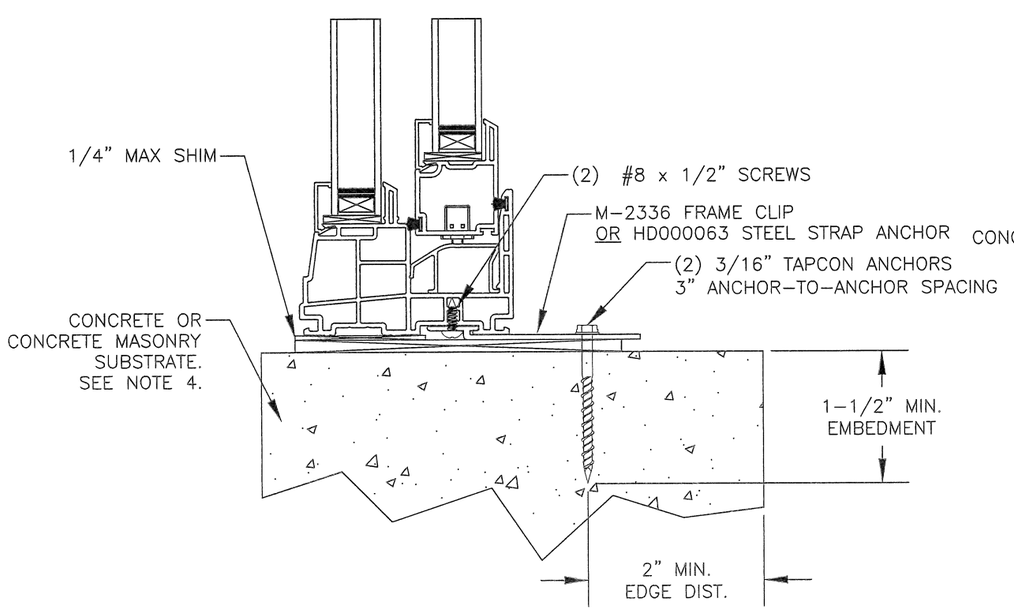

SILL (ANCHOR PLATE)

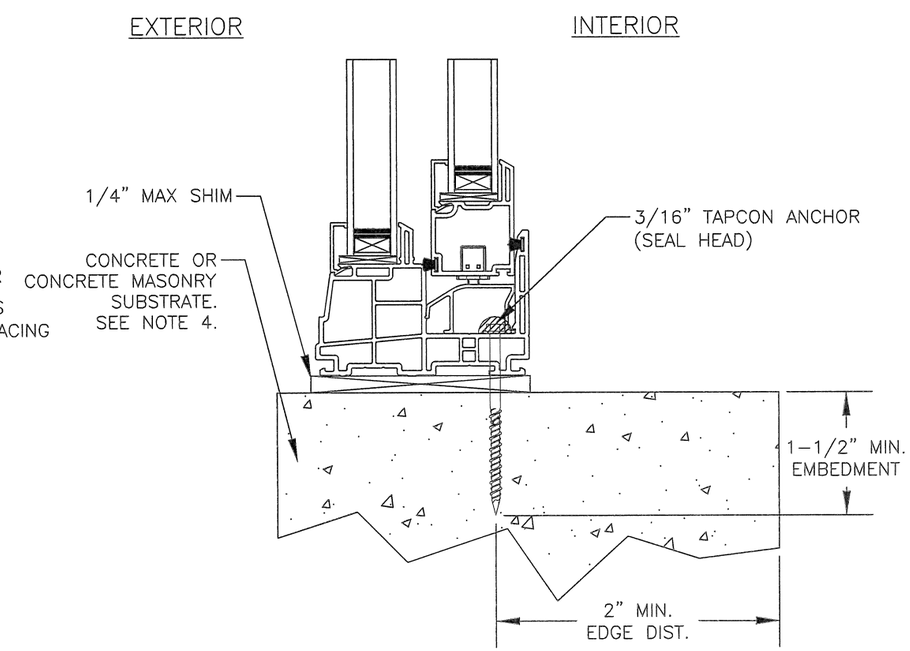

SILL (THROUGH FRAME)

This item has been digitally signed and sealed by Michael D. Stremmel, PE on the date adjacent to the seal. Printed copies of this document are not considered signed and sealed and the signature must be verified on any electronic copies.

Michael D. Stremmel, PE
FL PE 65868
FL REG 37122
1410 Eden Road
York, PA 17402
717-916-6300

MICHAEL D. STREMMEL
LICENSE
No. 65868
STATE OF FLORIDA
PROFESSIONAL ENGINEER

2023.12.12 06:39:21 -05'00'

1630 Sliding Window - non Impact
Frame Installation to Concrete/CMU

MI Windows and Doors
702 W. Market St.
Gratz, PA 17030

Drawing No.: 27488.09-1008
Project No.: 27488.09-107-16
Drawn By: MDS REV: - Date:12/12/23

Scale: NTS | Sheet 8 of 10

Note:
Waterproofing and interior finishes by others. Not shown for clarity.

HEAD

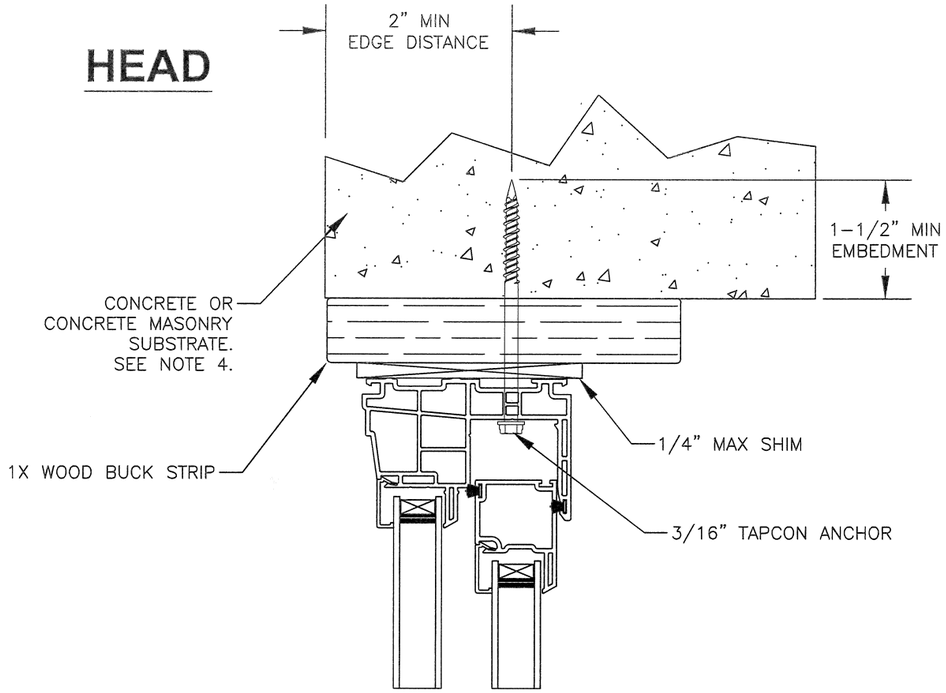

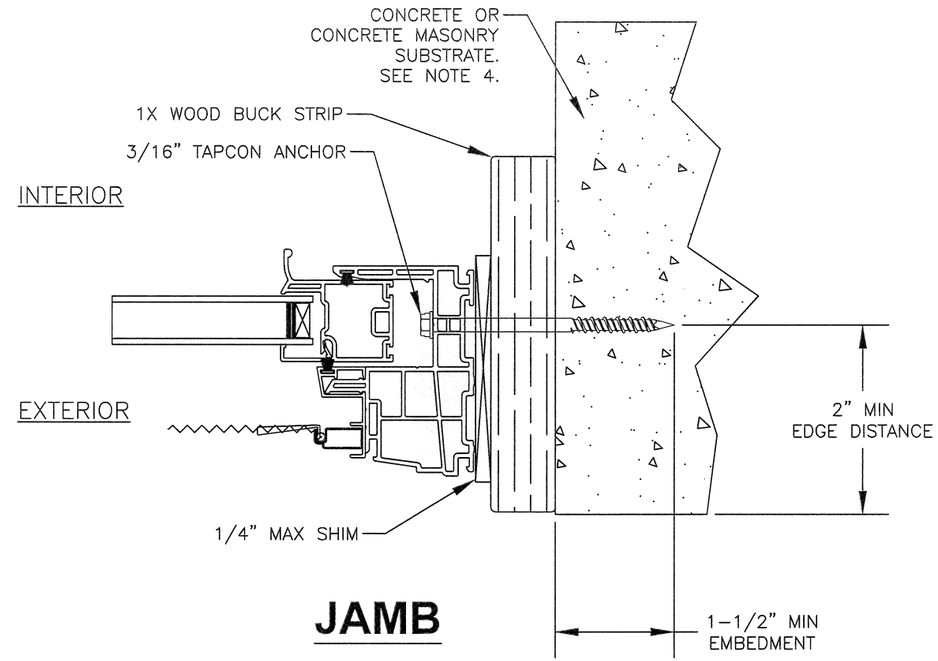

JAMB

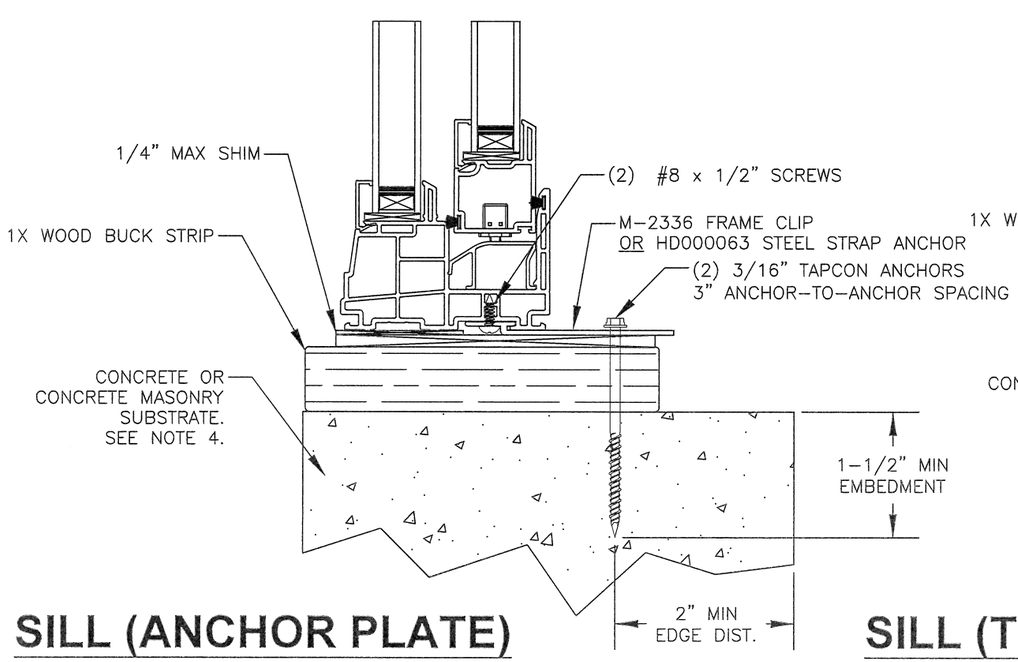

SILL (ANCHOR PLATE)

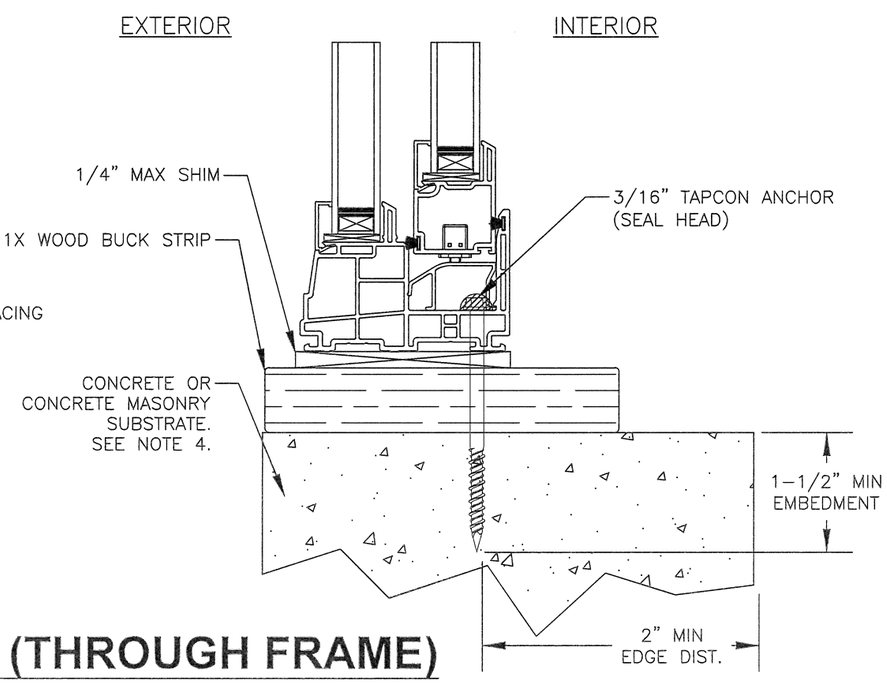

SILL (THROUGH FRAME)

This item has been digitally signed and sealed by Michael D. Stremmel, PE on the date adjacent to the seal. Printed copies of this document are not considered signed and sealed and the signature must be verified on any electronic copies.

Michael D. Stremmel, PE
FL PE 65868
FL REG 37122
1410 Eden Road
York, PA 17402
717-916-6300

MICHAEL D. STREMMEL
LICENSE
No. 65868
STATE OF FLORIDA
PROFESSIONAL ENGINEER

2023.12.12 06:39:21 -05'00'

1630 Sliding Window - non Impact
Frame Installation to Concrete/CMU

MI Windows and Doors
702 W. Market St.
Gratz, PA 17030

Drawing No.: 27488.09-1008
Project No.: 27488.09-107-16
Drawn By: MDS REV: - Date:12/12/23

Scale: NTS | Sheet 9 of 10

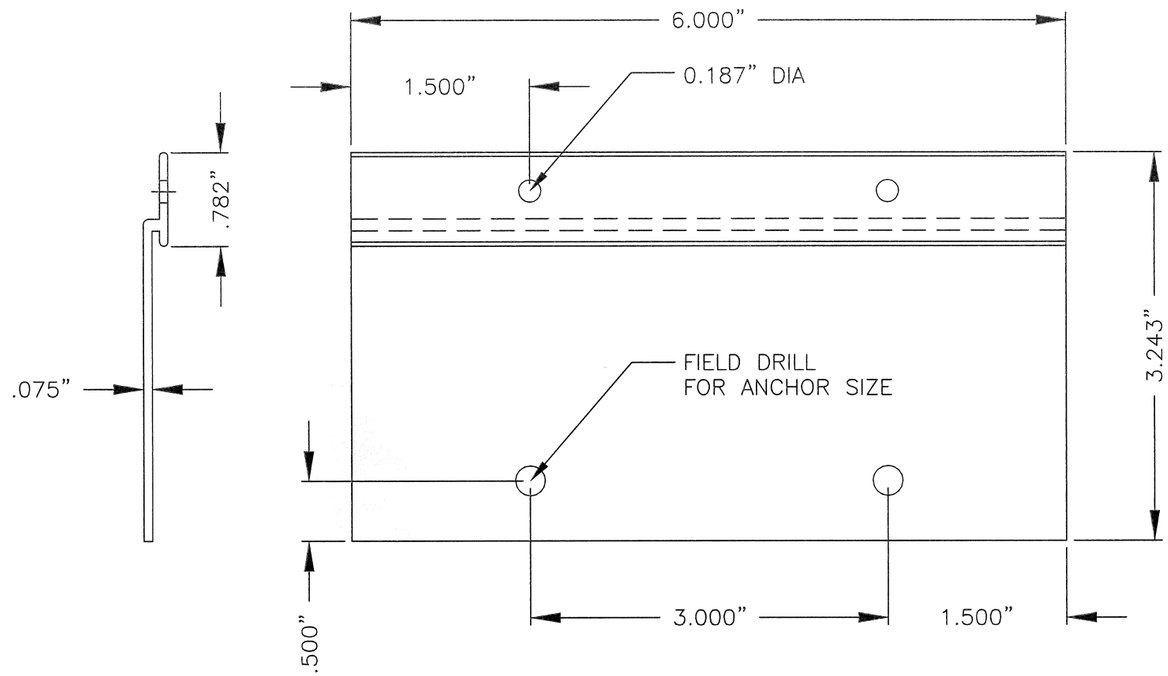

M-2336 FRAME CLIP
6063-T5 ALUMINUM

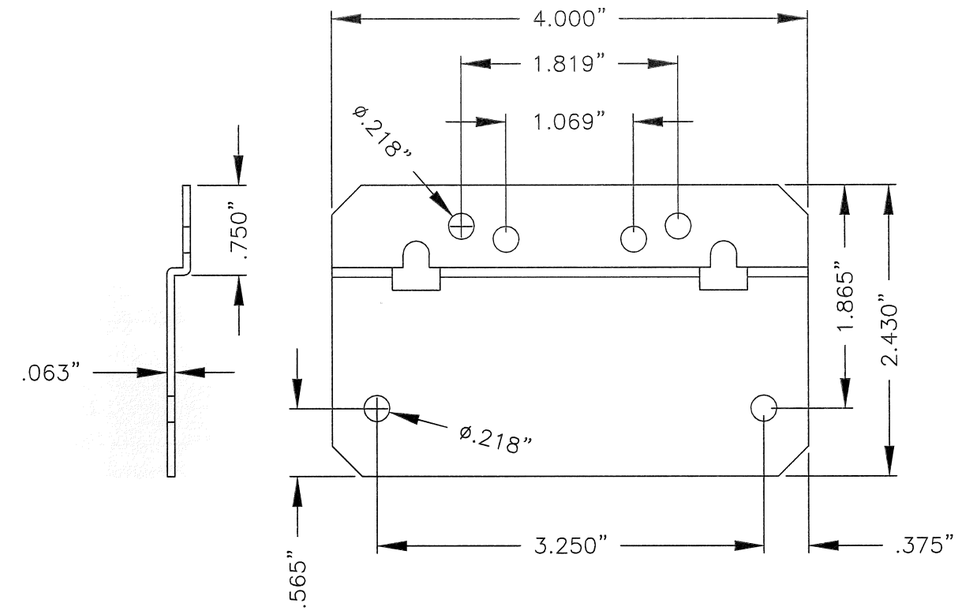

HD000063 ANCHOR STRAP
COLD ROLLED STEEL (GALVANIZED)

This item has been digitally signed and sealed by Michael D. Stremmel, PE on the date adjacent to the seal. Printed copies of this document are not considered signed and sealed and the signature must be verified on any electronic copies.

Michael D. Stremmel, PE
FL PE 65868
FL REG 37122
1410 Eden Road
York, PA 17402
717-916-6300

MICHAEL D. STREMMEL
LICENSE
No. 65868
STATE OF FLORIDA
PROFESSIONAL ENGINEER

2023.12.12 06:39:21 -05'00'

1630 Sliding Window - non Impact
Installation Accessories

MI Windows and Doors
702 W. Market St.
Gratz, PA 17030

Drawing No.: 27488.09-1008
Project No.: 27488.09-107-16
Drawn By: MDS REV: - Date:12/12/23

Scale: NTS | Sheet 10 of 10

REVISIONS			
REV	DESCRIPTION	DATE	APPROVED
A	REVISED PER NEW CODE	10/25/2023	R.L.

NOTES:
1. THE PRODUCT SHOWN HEREIN IS DESIGNED AND MANUFACTURED TO COMPLY WITH REQUIREMENTS OF THE FLORIDA BUILDING CODE.
2. WOOD FRAMING AND MASONRY OPENING TO BE DESIGNED AND ANCHORED TO PROPERLY TRANSFER ALL LOADS TO STRUCTURE. FRAMING AND MASONRY OPENING IS THE RESPONSIBILITY OF THE ARCHITECT OR ENGINEER OF RECORD.
3. WHERE SHIM OR BUCK THICKNESS IS LESS THAN 1–1/2" WINDOW UNITS MUST BE ANCHORED THROUGH THE FRAME IN ACCORDANCE WITH MANUFACTURER'S PUBLISHED INSTALLATION INSTRUCTIONS. ANCHORS SHALL BE SECURELY FASTENED DIRECTLY INTO MASONRY, CONCRETE OR OTHER STRUCTURAL SUBSTRATE MATERIAL.
4. WHERE WOOD BUCK THICKNESS IS 1–1/2" OR GREATER, BUCK SHALL BE SECURELY FASTENED TO MASONRY, CONCRETE OR OTHER STRUCTURAL SUBSTRATE. WINDOW UNITS MAY BE ANCHORED THROUGH FRAME TO SECURED WOOD BUCK IN ACCORDANCE WITH MANUFACTURER'S PUBLISHED INSTALLATION INSTRUCTIONS.
5. WHERE 1X BUCK IS NOT USED DISSIMILAR MATERIALS MUST BE SEPARATED WITH APPROVED COATING OR MEMBRANE. SELECTION OF COATING OR MEMBRANE IS THE RESPONSIBILITY OF THE ARCHITECT OR ENGINEER OF RECORD.
6. BUCKS SHALL EXTEND BEYOND WINDOW INTERIOR FACE SO THAT FULL FRAME SUPPORT IS PROVIDED.
7. SHIM AS NEEDED AT EACH ANCHOR LOCATION WITH LOAD BEARING SHIM. SHIM WHERE SPACE OF 1/16" OR GREATER OCCURS. MAXIMUM ALLOWABLE SHIM STACK TO BE 1/4".
8. SHIMS SHALL BE LOCATED, APPLIED AND MADE FROM MATERIALS AND THICKNESS CAPABLE OF SUSTAINING APPLICABLE LOADS.
9. WIND LOAD DURATION FACTOR Cd=1.6 WAS USED FOR WOOD ANCHOR CALCULATIONS.
10. FRAME MATERIAL: EXTRUDED RIGID PVC.
11. UNITS MUST BE GLAZED PER ASTM E1300.
12. APPROVED IMPACT PROTECTIVE SYSTEM <u>IS REQUIRED</u> FOR THIS PRODUCT IN WIND BORNE DEBRIS REGIONS.
13. FOR ANCHORING THROUGH FIN INTO WOOD FRAMING OR 2X BUCK USE #6 WOOD SCREWS WITH SUFFICIENT LENGTH TO ACHIEVE A 1 1/4" MINIMUM EMBEDMENT INTO SUBSTRATE. LOCATE ANCHORS AS SHOWN IN ELEVATIONS AND INSTALLATION DETAILS.
14. FOR ANCHORING THROUGH FIN INTO METAL STRUCTURE USE #8 SMS OR SELF DRILLING SCREWS WITH SUFFICIENT LENGTH TO ACHIEVE 3 THREADS MINIMUM BEYOND STRUCTURE INTERIOR WALL. LOCATE ANCHORS AS SHOWN IN ELEVATIONS AND INSTALLATION DETAILS.
15. FOR ANCHORING THROUGH FRAME INTO WOOD FRAMING OR 2X BUCK USE #8 WOOD SCREWS WITH SUFFICIENT LENGTH TO ACHIEVE A 1 1/4" MINIMUM EMBEDMENT INTO SUBSTRATE. LOCATE ANCHORS AS SHOWN IN ELEVATIONS AND INSTALLATION DETAILS.
16. FOR ANCHORING THROUGH FRAME INTO MASONRY/CONCRETE USE 3/16" TAPCONS WITH SUFFICIENT LENGTH TO ACHIEVE A 1 1/4" MINIMUM EMBEDMENT INTO SUBSTRATE WITH 2'' MINIMUM EDGE DISTANCE. LOCATE ANCHORS AS SHOWN IN ELEVATIONS AND INSTALLATION DETAILS.
17. FOR ANCHORING THROUGH FRAME INTO METAL STRUCTURE USE #8 SMS OR SELF DRILLING SCREWS WITH SUFFICIENT LENGTH TO ACHIEVE 3 THREADS MINIMUM BEYOND STRUCTURE INTERIOR WALL. LOCATE ANCHORS AS SHOWN IN ELEVATIONS AND INSTALLATION DETAILS.
18. ALL FASTENERS TO BE CORROSION RESISTANT.
19. INSTALLATION ANCHORS SHALL BE INSTALLED IN ACCORDANCE WITH ANCHOR MANUFACTURER'S INSTALLATION INSTRUCTIONS AND ANCHORS SHALL NOT BE USED IN SUBSTRATES WITH STRENGTHS LESS THAN THE MINIMUM STRENGTH SPECIFIED BELOW:
   - 19.1. WOOD: MINIMUM SPECIFIC GRAVITY OF G=0.42
   - 19.2. CONCRETE: MINIMUM COMPRESSIVE STRENGTH OF 2,000 PSI.
   - 19.3. MASONRY: HOLLOW/FILLED BLOCK PER ASTM C90 WITH Fm=2,000PSI MINIMUM.
   - 19.4. METAL STRUCTURE: STEEL 18GA (.048") FY=33KSI/FU=52KSI OR ALUMINUM 6063–T5 FU=30KSI 1/8" THICK MINIMUM

SIGNED: 10/25/2023

TABLE OF CONTENTS

SHEET NO.	DESCRIPTION
1	NOTES
2	ELEVATIONS
3 – 12	INSTALLATION DETAILS
13	INSTALLATION DETAILS

MI WINDOWS AND DOORS LLC
650 MARKET STREET
GRATZ, PA 17030

SERIES 1630 HS REINFORCED
NON–IMPACT 72" X 53"
NOTES

DRAWN:	DWG NO.	REV
R.L.	08–03000	A

SCALE NTS | DATE 11/30/16 | SHEET 1 OF 13

L. ROBERTO LOMAS P.E.
208 7th Ave, INDIALANTIC, FL 32903
434-688-0609 rllomas@lrlomaspe.com

LUIS R. LOMAS LICENSE No. 62514 STATE OF FLORIDA PROFESSIONAL ENGINEER

Luis R. Lomas P.E.
FL No.: 62514

REVISIONS			
REV	DESCRIPTION	DATE	APPROVED
A	REVISED PER NEW CODE	10/25/2023	R.L.

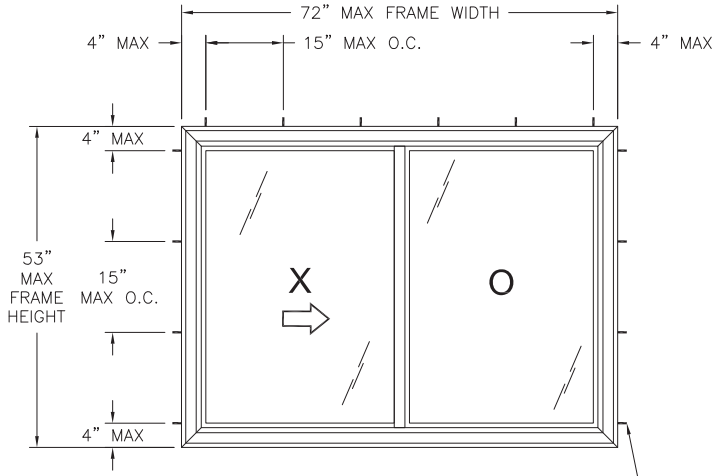

1630 SH REINFORCED
EXTERIOR VIEW
FINLESS & FLANGE INSTALLATION

FOR NUMBER OF ANCHORS REQUIRED SEE CHART #1

DESIGN PRESSURE RATING	IMPACT RATING
±45.0PSF	NONE

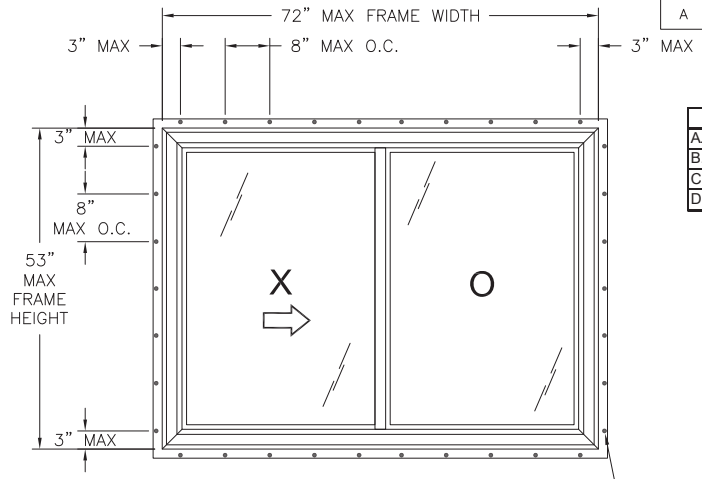

1630 SH REINFORCED
EXTERIOR VIEW
FIN INSTALLATION

FOR NUMBER OF ANCHORS REQUIRED SEE CHART #2

DESIGN PRESSURE RATING	IMPACT RATING
+50.0/-60.0PSF	NONE

HARDWARE SCHEDULE	
A.	(2) METAL LOCK WITH KEEPER 14" FROM TOP AND BOTTOM RAIL
B.	(2) SASH WHEELS 1 1/2" FROM STILES ALONG BOTTOM RAIL
C.	ALUMINUM REINFORCEMENT (AE-000162) AT INTERMEDIATE JAMB
D.	ALUMINUM REINFORCEMENT (M-2115) AT SASH LOCKING STILE

NOTES:
1. *MAXIMUM SASH SIZE: 35 5/8" X 50"*
2. *MAXIMUM D.L.O.: 32 1/16" X 48 1/4"*

Chart #1

Number of anchor locations required

Frame Height (in)	Frame Width (in) 36.00 Head	36.00 Jamb	42.00 Head	42.00 Jamb	48.00 Head	48.00 Jamb	54.00 Head	54.00 Jamb	60.00 Head	60.00 Jamb	66.00 Head	66.00 Jamb	72.00 Head	72.00 Jamb
24.00	3	3	4	3	4	3	5	3	5	3	5	3	6	3
30.00	3	3	4	3	4	3	5	3	5	3	5	3	6	3
36.00	3	3	4	3	4	3	5	3	5	3	5	3	6	3
42.00	3	4	4	4	4	4	5	4	5	4	5	4	6	4
48.00	3	4	4	4	4	4	5	4	5	4	5	4	6	4
53.00	3	4	4	4	4	4	5	4	5	4	5	4	6	4

Chart #2

Number of anchor locations required

Frame Height (in)	Frame Width (in) 36.00 H & S	36.00 Jamb	42.00 H & S	42.00 Jamb	48.00 H & S	48.00 Jamb	54.00 H & S	54.00 Jamb	60.00 H & S	60.00 Jamb	66.00 H & S	66.00 Jamb	72.00 H & S	72.00 Jamb
24.00	5	4	6	4	7	4	7	4	8	4	9	4	10	4
30.00	5	4	6	4	7	4	7	4	8	4	9	4	10	4
36.00	5	5	6	5	7	5	7	5	8	5	9	5	10	5
42.00	5	6	6	6	7	6	7	6	8	6	9	6	10	6
48.00	5	7	6	7	7	7	7	7	8	7	9	7	10	7
53.00	5	7	6	7	7	7	7	7	8	7	9	7	10	7

SIGNED: 10/25/2023

MI WINDOWS AND DOORS LLC
650 MARKET STREET
GRATZ, PA 17030

SERIES 1630 HS REINFORCED
NON-IMPACT 72" X 53"
ELEVATIONS

DRAWN: R.L.	DWG NO. 08-03000	REV A
SCALE NTS	DATE 11/30/16	SHEET 2 OF 13

L. ROBERTO LOMAS P.E.
208 7th Ave, INDIALANTIC, FL 32903
434-688-0609 rllomas@lrlomaspe.com

LUIS R. LOMAS LICENSE No. 62514 STATE OF FLORIDA PROFESSIONAL ENGINEER

Luis R. Lomas P.E.
FL No.: 62514

REVISIONS			
REV	DESCRIPTION	DATE	APPROVED
A	REVISED PER NEW CODE	10/25/2023	R.L.

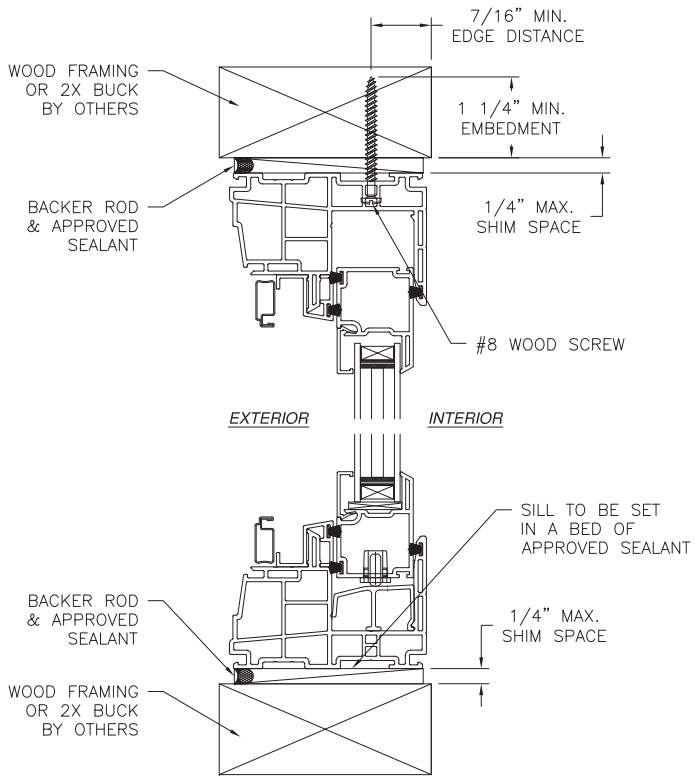

VERTICAL CROSS SECTION

WOOD FRAMING OR 2X BUCK INSTALLATION

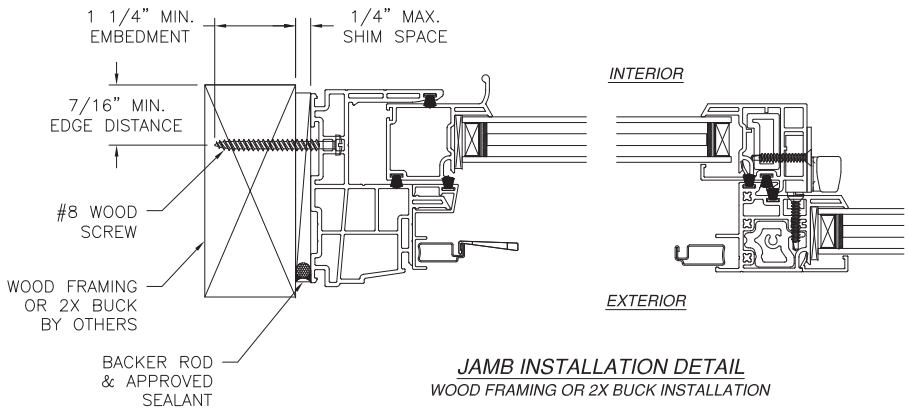

JAMB INSTALLATION DETAIL

WOOD FRAMING OR 2X BUCK INSTALLATION

NOTES:

1. *INTERIOR AND EXTERIOR FINISHES, BY OTHERS, NOT SHOWN FOR CLARITY.*
2. *PERIMETER AND JOINT SEALANT BY OTHERS TO BE DESIGNED IN ACCORDANCE WITH ASTM E2112*

SIGNED: 10/25/2023

MI WINDOWS AND DOORS LLC
650 MARKET STREET
GRATZ, PA 17030

SERIES 1630 HS REINFORCED
NON-IMPACT 72" X 53"
FINLESS INSTALLATION DETAILS

DRAWN:	DWG NO.	REV
R.L.	08-03000	A

SCALE	DATE	SHEET
NTS	11/30/16	3 OF 13

L. ROBERTO LOMAS P.E.
208 7th Ave, INDIALANTIC, FL 32903
434-688-0609 rllomas@lrlomaspe.com

LUIS R. LOMAS
LICENSE
No. 62514
STATE OF
FLORIDA
PROFESSIONAL ENGINEER

Luis R. Lomas P.E.
FL No.: 62514

REVISIONS			
REV	DESCRIPTION	DATE	APPROVED
A	REVISED PER NEW CODE	10/25/2023	R.L.

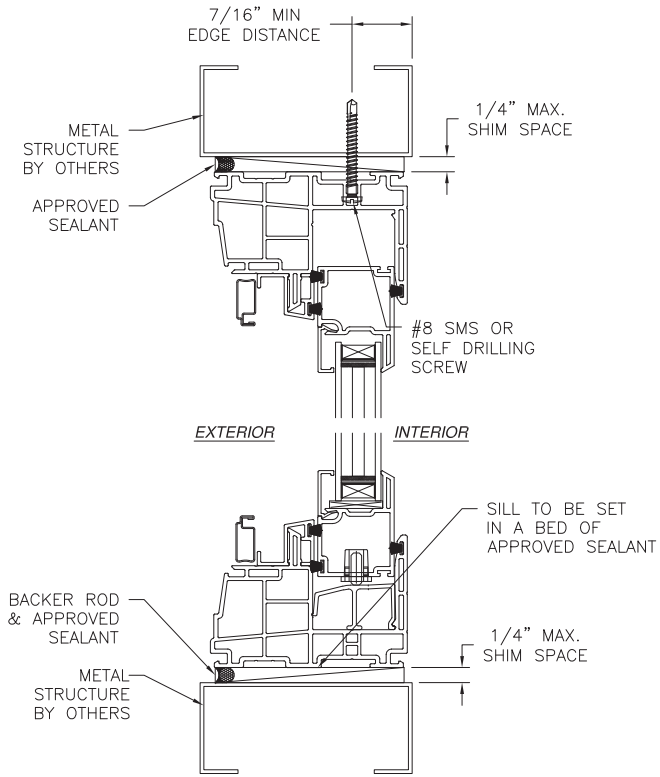

VERTICAL CROSS SECTION
METAL STRUCTURE INSTALLATION

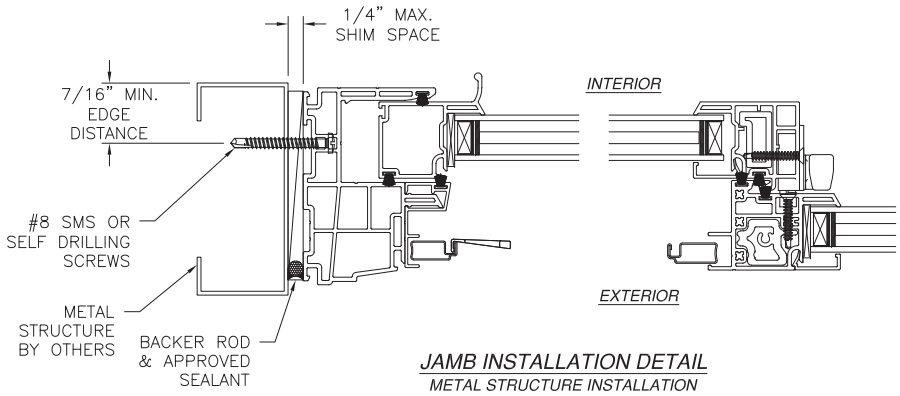

JAMB INSTALLATION DETAIL
METAL STRUCTURE INSTALLATION

SIGNED: 10/25/2023

NOTES:
1. *INTERIOR AND EXTERIOR FINISHES, BY OTHERS, NOT SHOWN FOR CLARITY.*
2. *PERIMETER AND JOINT SEALANT BY OTHERS TO BE DESIGNED IN ACCORDANCE WITH ASTM E2112*

MI WINDOWS AND DOORS LLC
650 MARKET STREET
GRATZ, PA 17030

SERIES 1630 HS REINFORCED
NON-IMPACT 72" X 53"
FINLESS INSTALLATION DETAILS

DRAWN:	DWG NO.	REV
R.L.	08-03000	A

SCALE	DATE	SHEET
NTS	11/30/16	4 OF 13

L. ROBERTO LOMAS P.E.
208 7th Ave, INDIALANTIC, FL 32903
434-688-0609 rllomas@lrlomaspe.com

LUIS R. LOMAS
LICENSE
No. 62514
STATE OF
FLORIDA
PROFESSIONAL ENGINEER

Luis R. Lomas P.E.
FL No.: 62514

REVISIONS			
REV	DESCRIPTION	DATE	APPROVED
A	REVISED PER NEW CODE	10/25/2023	R.L.

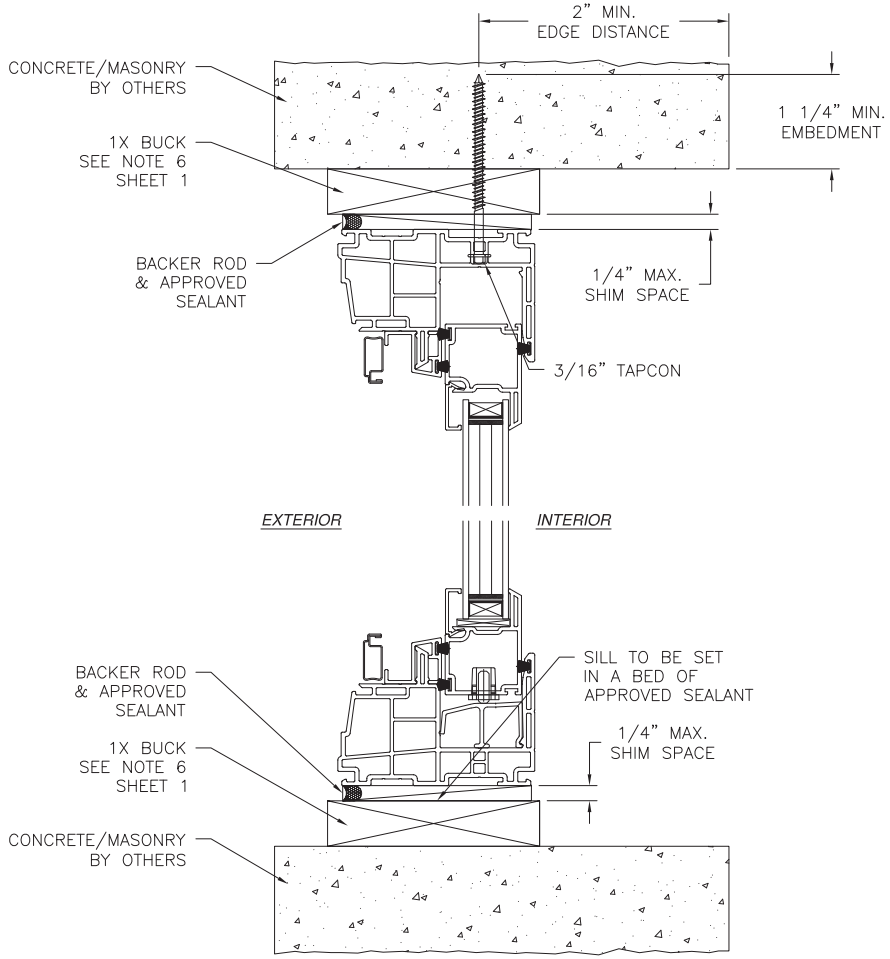

VERTICAL CROSS SECTION

CONCRETE/MASONRY WITH 1X BUCK INSTALLATION
FOR CONCRETE/MASONRY WITHOUT 1X BUCK REFER TO
JAMB INSTALLATION DETAIL

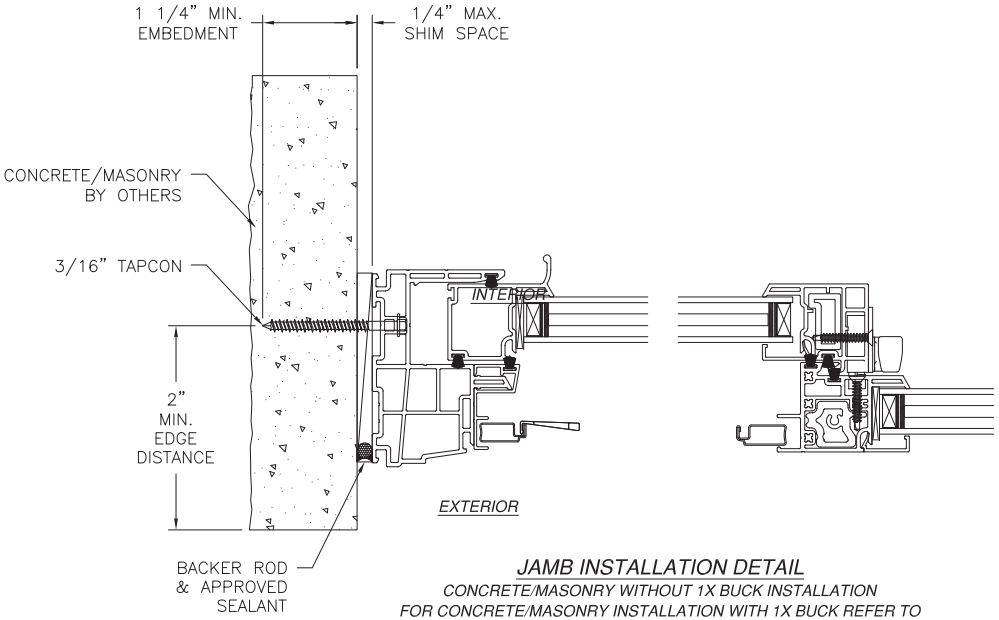

JAMB INSTALLATION DETAIL

CONCRETE/MASONRY WITHOUT 1X BUCK INSTALLATION
FOR CONCRETE/MASONRY INSTALLATION WITH 1X BUCK REFER TO
HEAD AND SILL INSTALLATION DETAILS

SIGNED: 10/25/2023

NOTES:
1. *INTERIOR AND EXTERIOR FINISHES, BY OTHERS, NOT SHOWN FOR CLARITY.*
2. *PERIMETER AND JOINT SEALANT BY OTHERS TO BE DESIGNED IN ACCORDANCE WITH ASTM E2112*

MI WINDOWS AND DOORS LLC
650 MARKET STREET
GRATZ, PA 17030

SERIES 1630 HS REINFORCED
NON-IMPACT 72" X 53"
FINLESS INSTALLATION DETAILS

DRAWN:	DWG NO.	REV
R.L.	08-03000	A

SCALE NTS | DATE 11/30/16 | SHEET 5 OF 13

L. ROBERTO LOMAS P.E.
208 7th Ave, INDIALANTIC, FL 32903
434-688-0609 rllomas@lrlomaspe.com

LUIS R. LOMAS LICENSE No. 62514 STATE OF FLORIDA PROFESSIONAL ENGINEER

Luis R. Lomas P.E.
FL No.: 62514

REVISIONS			
REV	DESCRIPTION	DATE	APPROVED
A	REVISED PER NEW CODE	10/25/2023	R.L.

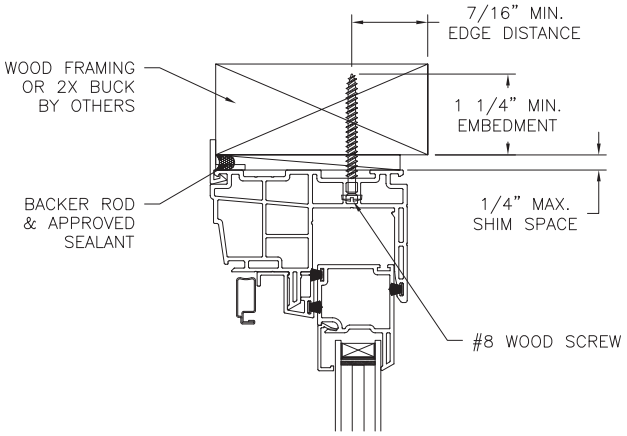

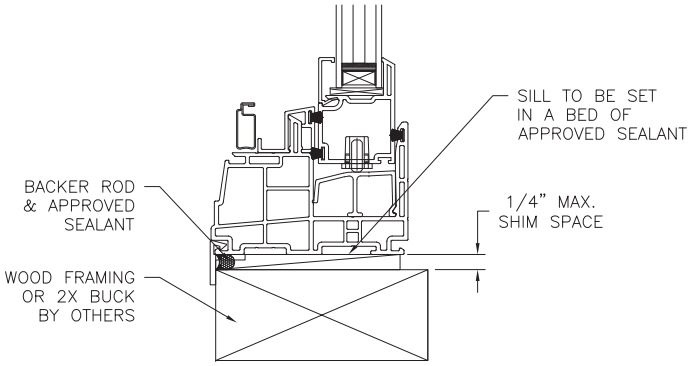

VERTICAL CROSS SECTION
WOOD FRAMING OR 2X BUCK INSTALLATION

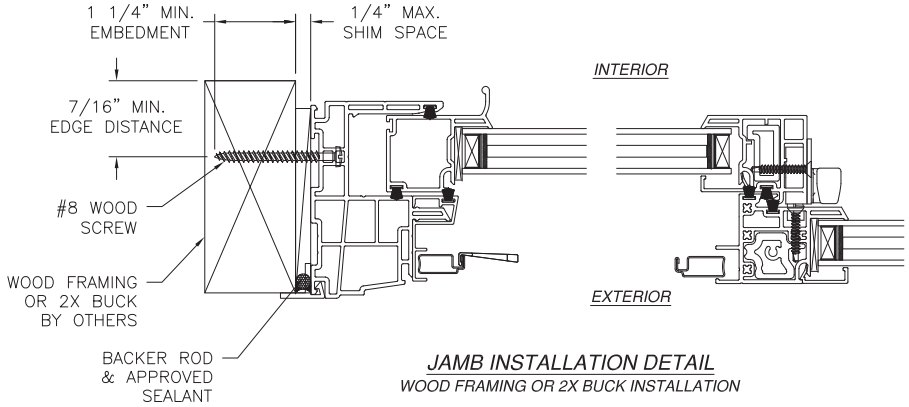

JAMB INSTALLATION DETAIL
WOOD FRAMING OR 2X BUCK INSTALLATION

NOTES:
1. *INTERIOR AND EXTERIOR FINISHES, BY OTHERS, NOT SHOWN FOR CLARITY.*
2. *PERIMETER AND JOINT SEALANT BY OTHERS TO BE DESIGNED IN ACCORDANCE WITH ASTM E2112*

SIGNED: 10/25/2023

MI WINDOWS AND DOORS LLC
650 MARKET STREET
GRATZ, PA 17030

SERIES 1630 HS REINFORCED
NON-IMPACT 72" X 53"
FLANGE INSTALLATION DETAILS

DRAWN: R.L.	DWG NO. 08-03000	REV A
SCALE NTS	DATE 11/30/16	SHEET 6 OF 13

L. ROBERTO LOMAS P.E.
208 7th Ave, INDIALANTIC, FL 32903
434-688-0609 rllomas@lrlomaspe.com

LUIS R. LOMAS LICENSE No. 62514 STATE OF FLORIDA PROFESSIONAL ENGINEER

Luis R. Lomas P.E.
FL No.: 62514

REVISIONS			
REV	DESCRIPTION	DATE	APPROVED
A	REVISED PER NEW CODE	10/25/2023	R.L.

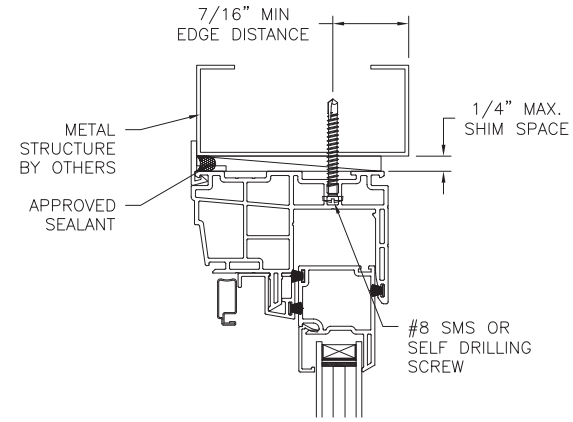

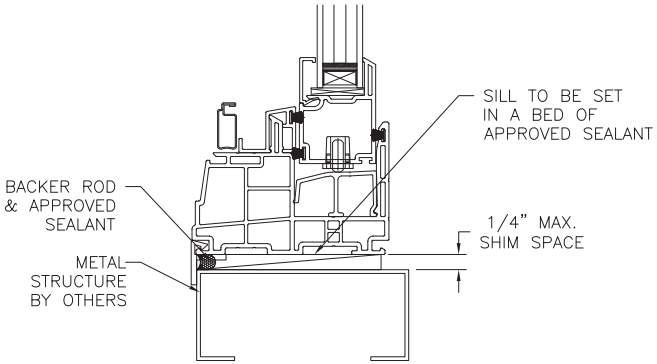

VERTICAL CROSS SECTION
METAL STRUCTURE INSTALLATION

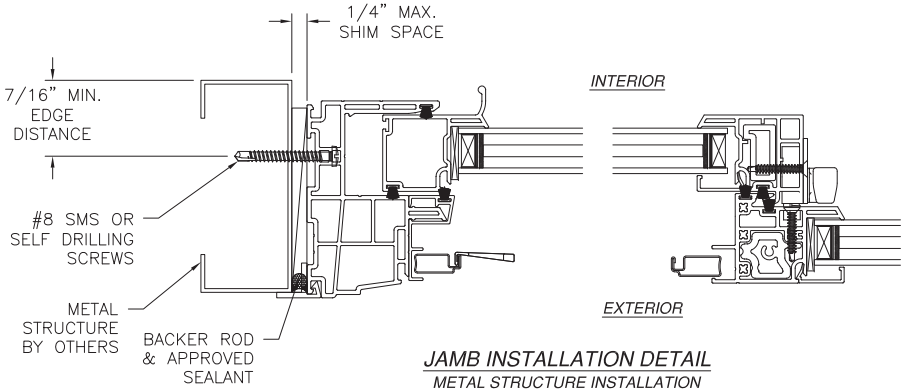

JAMB INSTALLATION DETAIL
METAL STRUCTURE INSTALLATION

NOTES:
1. *INTERIOR AND EXTERIOR FINISHES, BY OTHERS, NOT SHOWN FOR CLARITY.*
2. *PERIMETER AND JOINT SEALANT BY OTHERS TO BE DESIGNED IN ACCORDANCE WITH ASTM E2112*

SIGNED: 10/25/2023

MI WINDOWS AND DOORS LLC
650 MARKET STREET
GRATZ, PA 17030

SERIES 1630 HS REINFORCED
NON-IMPACT 72" X 53"
FLANGE INSTALLATION DETAILS

DRAWN:	DWG NO.	REV
R.L.	08-03000	A

SCALE	DATE	SHEET
NTS	11/30/16	7 OF 13

L. ROBERTO LOMAS P.E.
208 7th Ave, INDIALANTIC, FL 32903
434-688-0609 rllomas@lrlomaspe.com

LUIS R. LOMAS
LICENSE
No. 62514
STATE OF
FLORIDA
PROFESSIONAL ENGINEER

Luis R. Lomas P.E.
FL No.: 62514

REVISIONS			
REV	DESCRIPTION	DATE	APPROVED
A	REVISED PER NEW CODE	10/25/2023	R.L.

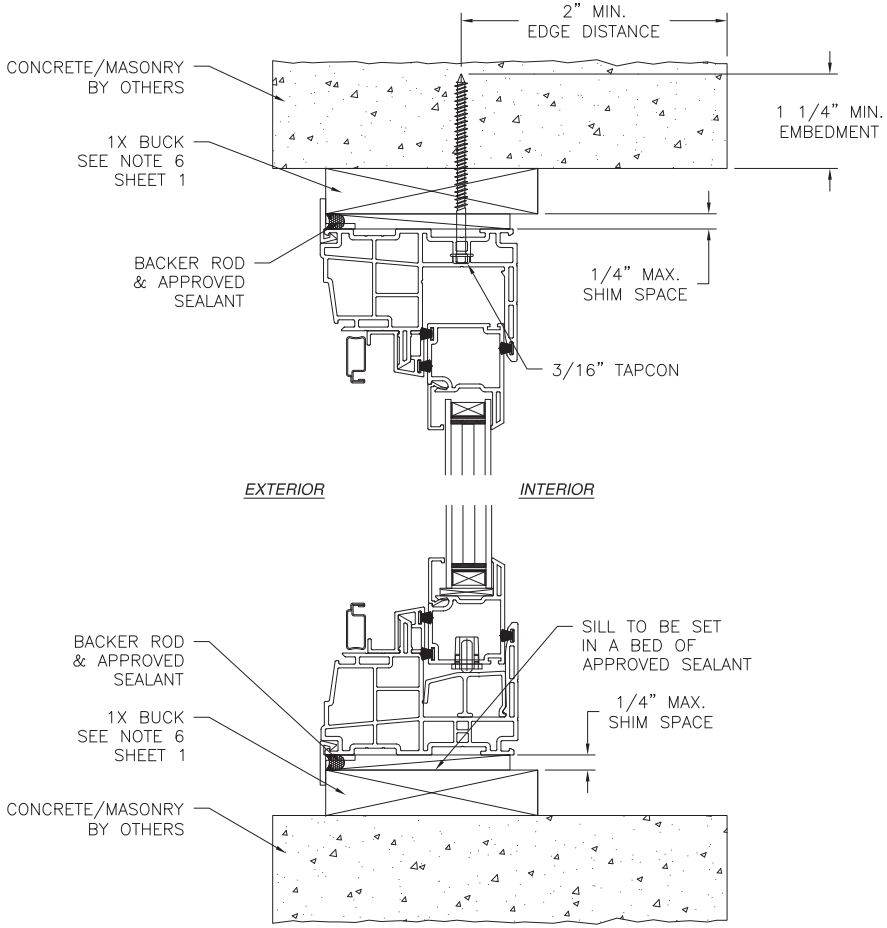

VERTICAL CROSS SECTION

CONCRETE/MASONRY WITH 1X BUCK INSTALLATION
FOR CONCRETE/MASONRY WITHOUT 1X BUCK REFER TO
JAMB INSTALLATION DETAIL

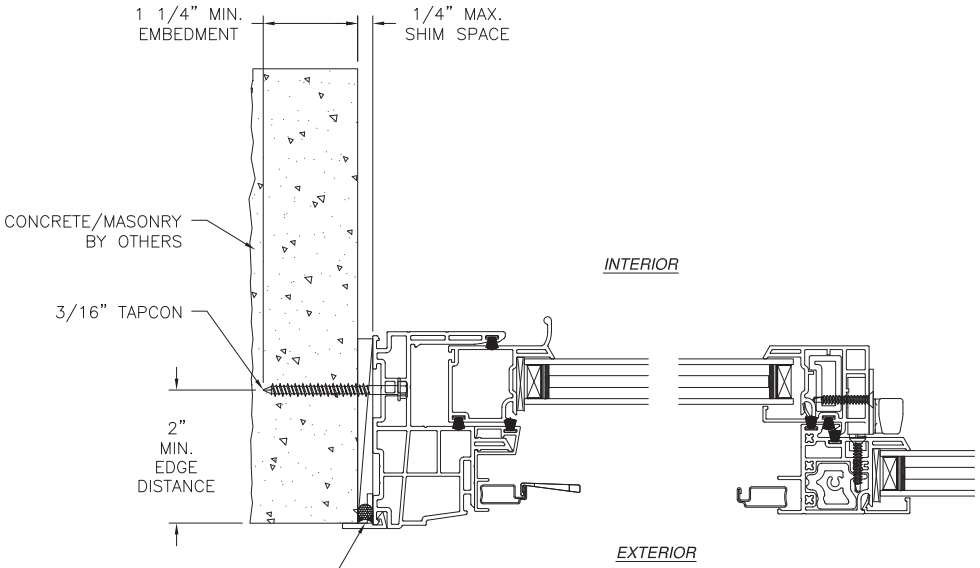

JAMB INSTALLATION DETAIL

CONCRETE/MASONRY WITHOUT 1X BUCK INSTALLATION
FOR CONCRETE/MASONRY INSTALLATION WITH 1X BUCK REFER TO
HEAD AND SILL INSTALLATION DETAILS

NOTES:

1. *INTERIOR AND EXTERIOR FINISHES, BY OTHERS, NOT SHOWN FOR CLARITY.*
2. *PERIMETER AND JOINT SEALANT BY OTHERS TO BE DESIGNED IN ACCORDANCE WITH ASTM E2112*

SIGNED: 10/25/2023

MI WINDOWS AND DOORS LLC
650 MARKET STREET
GRATZ, PA 17030

SERIES 1630 HS REINFORCED
NON-IMPACT 72" X 53"
FLANGE INSTALLATION DETAILS

DRAWN:	DWG NO.	REV
R.L.	08-03000	A

SCALE	DATE	SHEET
NTS	11/30/16	8 OF 13

L. ROBERTO LOMAS P.E.
208 7th Ave, INDIALANTIC, FL 32903
434-688-0609 rllomas@lrlomaspe.com

LUIS R. LOMAS
LICENSE
No. 62514
STATE OF
FLORIDA
PROFESSIONAL ENGINEER

Luis R. Lomas P.E.
FL No.: 62514

REVISIONS			
REV	DESCRIPTION	DATE	APPROVED
A	REVISED PER NEW CODE	10/25/2023	R.L.

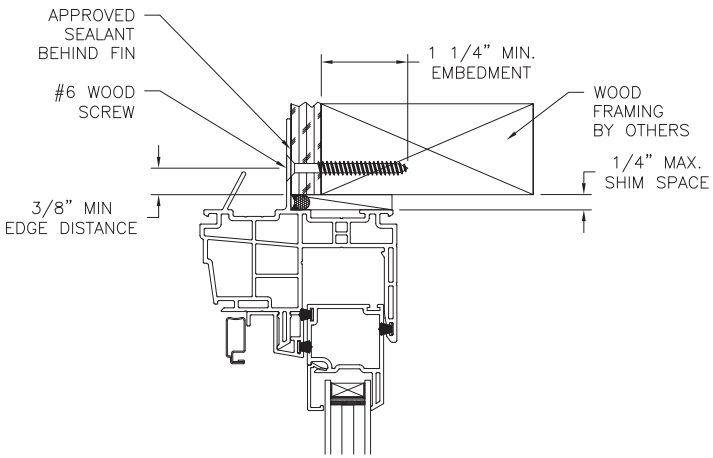

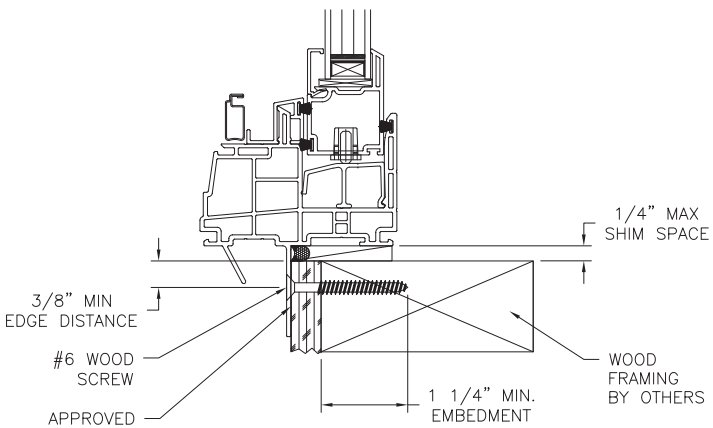

VERTICAL CROSS SECTION
WOOD FRAMING OR 2X BUCK INSTALLATION

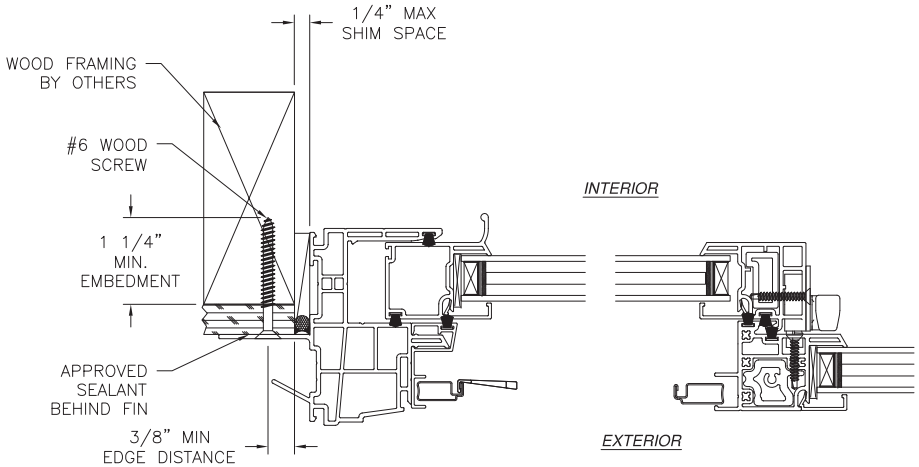

JAMB INSTALLATION DETAIL
WOOD FRAMING OR 2X BUCK INSTALLATION

NOTES:
1. *INTERIOR AND EXTERIOR FINISHES, BY OTHERS, NOT SHOWN FOR CLARITY.*
2. *PERIMETER AND JOINT SEALANT BY OTHERS TO BE DESIGNED IN ACCORDANCE WITH ASTM E2112*

SIGNED: 10/25/2023

MI WINDOWS AND DOORS LLC
650 MARKET STREET
GRATZ, PA 17030

SERIES 1630 HS REINFORCED
NON-IMPACT 72" X 53"
FIN WITH J CHANNEL INSTALLATION DETAILS

DRAWN:	DWG NO.	REV
R.L.	08-03000	A

SCALE	DATE	SHEET
NTS	11/30/16	9 OF 13

L. ROBERTO LOMAS P.E.
208 7th Ave, INDIALANTIC, FL 32903
434-688-0609 rllomas@lrlomaspe.com

LUIS R. LOMAS LICENSE No. 62514 STATE OF FLORIDA PROFESSIONAL ENGINEER

Luis R. Lomas P.E.
FL No.: 62514

REVISIONS			
REV	DESCRIPTION	DATE	APPROVED
A	REVISED PER NEW CODE	10/25/2023	R.L.

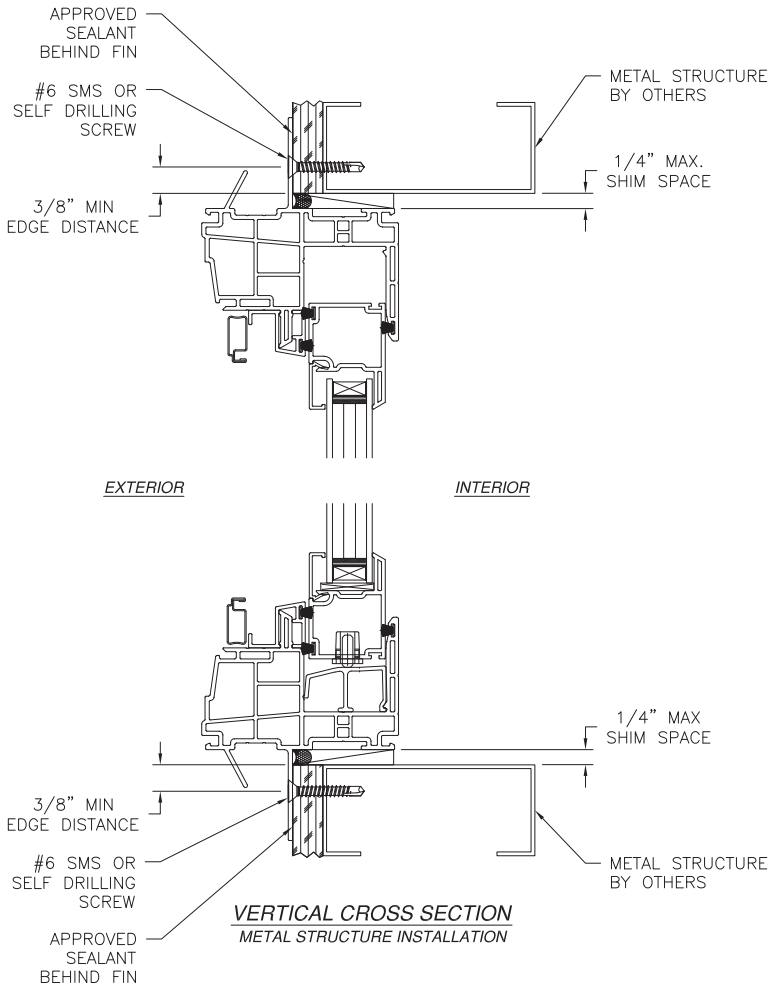

VERTICAL CROSS SECTION
METAL STRUCTURE INSTALLATION

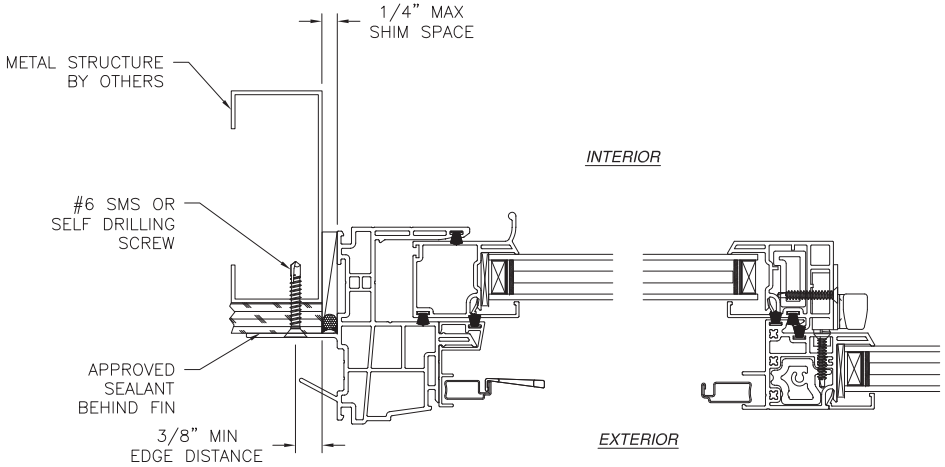

JAMB INSTALLATION DETAIL
METAL STRUCTURE INSTALLATION

NOTES:
1. *INTERIOR AND EXTERIOR FINISHES, BY OTHERS, NOT SHOWN FOR CLARITY.*
2. *PERIMETER AND JOINT SEALANT BY OTHERS TO BE DESIGNED IN ACCORDANCE WITH ASTM E2112*

SIGNED: 10/25/2023

MI WINDOWS AND DOORS LLC
650 MARKET STREET
GRATZ, PA 17030

SERIES 1630 HS REINFORCED
NON-IMPACT 72" X 53"
FIN WITH J CHANNEL INSTALLATION DETAILS

DRAWN: R.L.	DWG NO. 08-03000	REV A
SCALE NTS	DATE 11/30/16	SHEET 10 OF 13

L. ROBERTO LOMAS P.E.
208 7th Ave, INDIALANTIC, FL 32903
434-688-0609 rllomas@lrlomaspe.com

LUIS R. LOMAS LICENSE No. 62514 STATE OF FLORIDA PROFESSIONAL ENGINEER

Luis R. Lomas P.E.
FL No.: 62514

REVISIONS			
REV	DESCRIPTION	DATE	APPROVED
A	REVISED PER NEW CODE	10/25/2023	R.L.

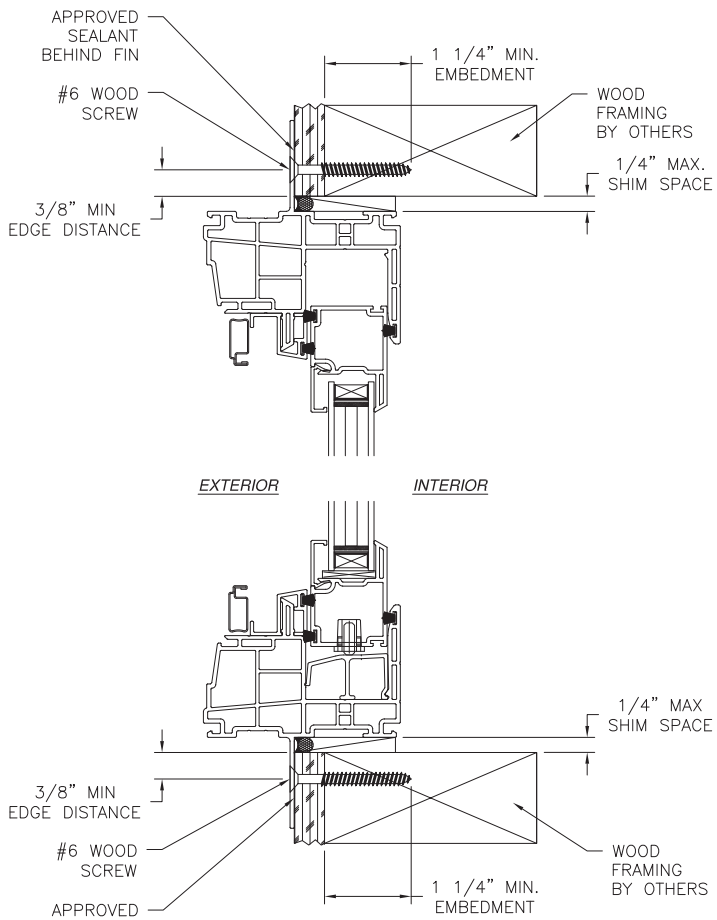

VERTICAL CROSS SECTION

WOOD FRAMING OR 2X BUCK INSTALLATION

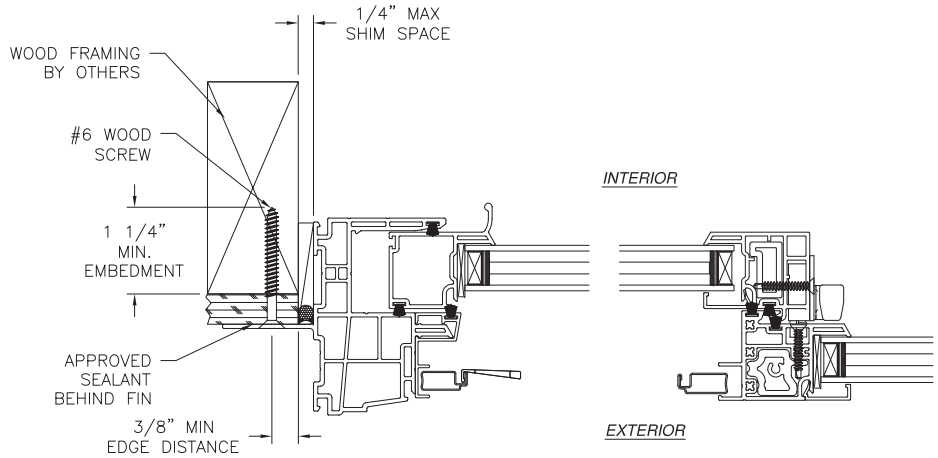

JAMB INSTALLATION DETAIL

WOOD FRAMING OR 2X BUCK INSTALLATION

NOTES:

1. *INTERIOR AND EXTERIOR FINISHES, BY OTHERS, NOT SHOWN FOR CLARITY.*
2. *PERIMETER AND JOINT SEALANT BY OTHERS TO BE DESIGNED IN ACCORDANCE WITH ASTM E2112*

SIGNED: 10/25/2023

MI WINDOWS AND DOORS LLC
650 MARKET STREET
GRATZ, PA 17030

SERIES 1630 HS REINFORCED
NON-IMPACT 72" X 53"
FIN INSTALLATION DETAILS

DRAWN:	DWG NO.	REV
R.L.	08-03000	A

SCALE	DATE	SHEET
NTS	11/30/16	11 OF 13

L. ROBERTO LOMAS P.E.
208 7th Ave, INDIALANTIC, FL 32903
434-688-0609 rllomas@lrlomaspe.com

LUIS R. LOMAS LICENSE No. 62514 STATE OF FLORIDA PROFESSIONAL ENGINEER

Luis R. Lomas P.E.
FL No.: 62514

REVISIONS			
REV	DESCRIPTION	DATE	APPROVED
A	REVISED PER NEW CODE	10/25/2023	R.L.

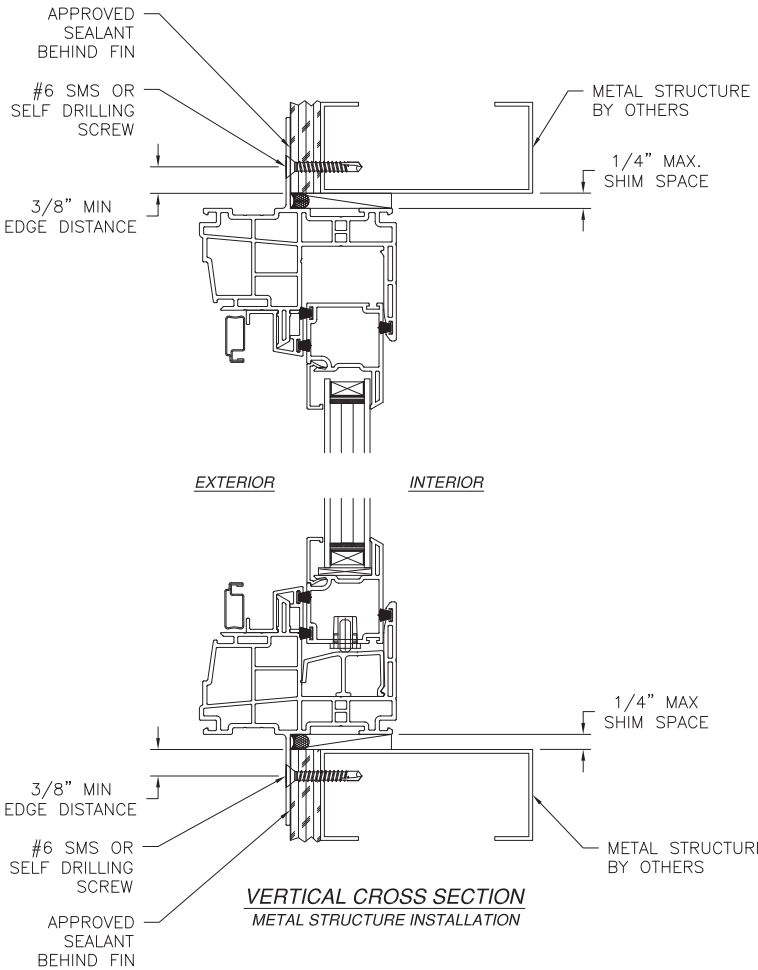

VERTICAL CROSS SECTION
METAL STRUCTURE INSTALLATION

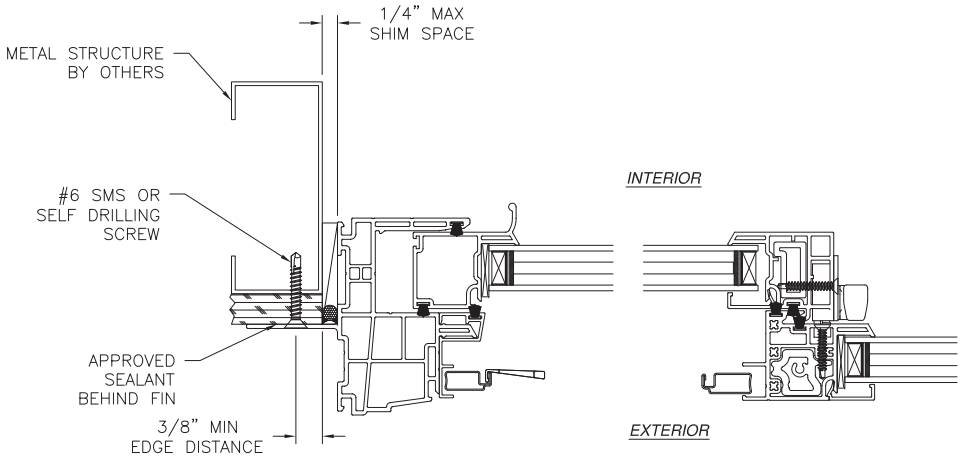

JAMB INSTALLATION DETAIL
METAL STRUCTURE INSTALLATION

NOTES:
1. INTERIOR AND EXTERIOR FINISHES, BY OTHERS, NOT SHOWN FOR CLARITY.
2. PERIMETER AND JOINT SEALANT BY OTHERS TO BE DESIGNED IN ACCORDANCE WITH ASTM E2112

SIGNED: 10/25/2023

MI WINDOWS AND DOORS LLC
650 MARKET STREET
GRATZ, PA 17030

SERIES 1630 HS REINFORCED
NON-IMPACT 72" X 53"
FIN INSTALLATION DETAILS

DRAWN: R.L.	DWG NO. 08-03000	REV A
SCALE NTS	DATE 11/30/16	SHEET 12 OF 13

L. ROBERTO LOMAS P.E.
208 7th Ave, INDIALANTIC, FL 32903
434-688-0609 rllomas@lrlomaspe.com

LUIS R. LOMAS LICENSE No. 62514 STATE OF FLORIDA PROFESSIONAL ENGINEER

Luis R. Lomas P.E.
FL No.: 62514

REVISIONS			
REV	DESCRIPTION	DATE	APPROVED
A	REVISED PER NEW CODE	10/25/2023	R.L.

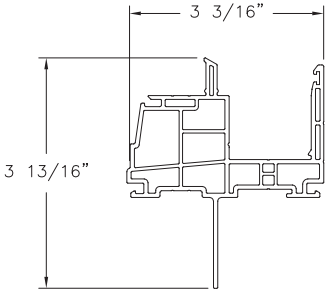

MAIN FRAME FIN (V-1019)
RIGID VINYL PVC

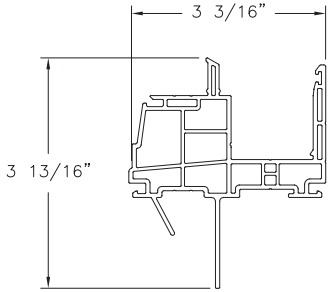

MAIN FRAME FIN W/ J CHANNEL (V-1018)
RIGID VINYL PVC

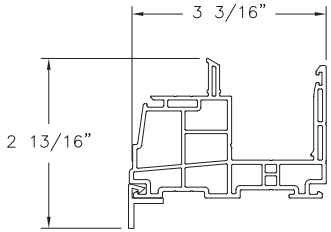

MAIN FRAME FINLESS FLANGE (V-1022)
RIGID VINYL PVC

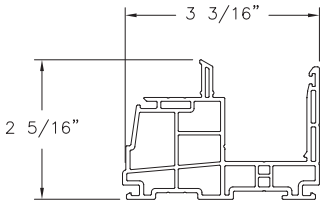

MAIN FRAME FINLESS (V-1020)
RIGID VINYL PVC

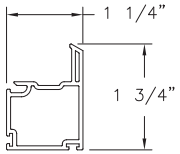

SASH, HORIZONTAL RAIL (V-670)
RIGID VINYL PVC

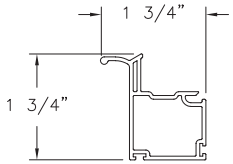

SASH, PULL RAIL (V-672)
RIGID VINYL PVC

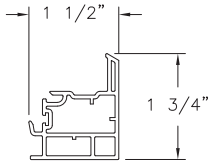

SASH, LOCK RAIL (V-675)
RIGID VINYL PVC

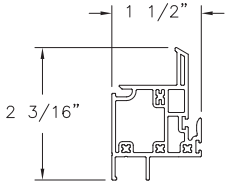

FIXED MEETING RAIL (V-1016)
RIGID VINYL PVC

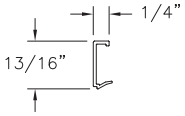

GLAZING BEAD (V-904)
RIGID VINYL PVC

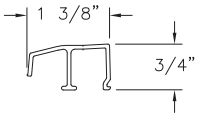

SINGLE SLIDE ROLLER TRACK (M-2345)
ALUMINUM 6063-T5

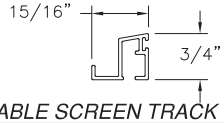

OPERABLE SCREEN TRACK W/O LEG (M-2341)
ALUMINUM 6063-T5

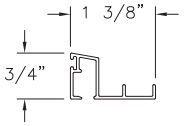

OPERABLE SCREEN TRACK (M-2340)
ALUMINUM 6063-T5

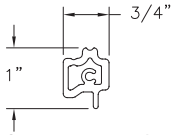

MEETING RAIL REINFORCEMENT (M-2343)
ALUMINUM 6063-T5

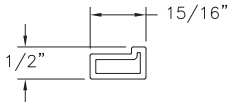

LOCK RAIL REINFORCEMENT (M-2115)
ALUMINUM 6063-T5

SIGNED: 10/25/2023

MI WINDOWS AND DOORS LLC
650 MARKET STREET
GRATZ, PA 17030

SERIES 1630 HS REINFORCED
NON-IMPACT 72" X 53"
COMPONENTS

DRAWN: R.L.	DWG NO. 08-03000	REV A
SCALE NTS	DATE 11/30/16	SHEET 13 OF 13

L. ROBERTO LOMAS P.E.
208 7th Ave, INDIALANTIC, FL 32903
434-688-0609 rllomas@lrlomaspe.com

Luis R. Lomas P.E.
FL No.: 62514

Received 6/3/2025
Planning & Building Department

Made in Florida, For Florida Homes, By Florida Workers

Windows made specifically for the Florida climate

NewSouth Windows are made right here in our Florida factory, so you get windows at ***true*** factory direct prices. The benefit is that you cut out the middleman and his mark up. The result is that you invest directly in the quality of the window and not the typical layers of re-sellers and their margins.

We install your windows into your home, so it's hassle free. Lastly, we guarantee the window and the installation for life!

We call that the NewSouth Window Solution, you'll call it the last window you'll ever buy.

Doors that offer security and style

Sliding patio doors, entry doors and french doors

Available in both Impact Resistant and Non-Impact Options

NewSouth's Sliding Patio Doors

- Security and tamper resistance- with dual multi-point locking system
- Custom manufactured in many sizes
- Easy operation- dual tandem rollers and stainless steel ball bearings for easy operation
- Durable heavy duty screen with memory screen coating that maintains it's form
- Energy efficient- and exceeds Florida Energy Star with NewSouth's eVantage 366 low-E glass.
- Available as custom stacked or as a pocket door
- Aluminum reinforced sashes for strength
- Structurally fastened sashes and welded master frames

NewSouth also offers Entry Doors and French Doors

- 100% Fiberglass Entry Doors
- Surface can be painted or stained to match your design options
- Side-lites and transoms available
- Glass options to suit your home's architecture

Design Options

White Bronze Tan

Color

Core Colors include white, tan and bronze exterior with white or tan interior.

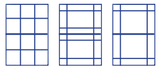

Colonial Prairie Open Prairie

Grids

Standard grid patterns are colonial, prairie and open prairie. Custom patterns and single sash options available.

Styles

Find a window style to suit the style of your home. NewSouth will custom make your windows specifically for you.

Double Hung Window | Single Hung Window | Horizontal Sliding Window | Picture Window | Circle Top and Shape Windows

Tampa Bay	Orlando	Sarasota
10741 Crossroads Commerce Blvd. Tampa, 33610 **(813) 626-6000**	820 E. Altamonte Dr. Altamonte Springs, 32701 **(407) 261-2277**	5249 S. Tamiami Trail Sarasota, 34231 **(941) 925-4000**
West Palm Beach	**FT. Lauderdale**	**Jacksonville**
2526 Okeechobee Blvd. West Palm Beach, 34231 **(561) 712-9000**	1401 South State Road 7 N. Lauderdale, 33068 **(954) 935-8300**	8590 Philips Highway Jacksonville, 32256 **(904) 717-5400**

Lic #
CRC-1330822
SCC-131151763
CRC-1331905

NewSouth WINDOW SOLUTIONS

We Manufacture, We Install, We Guarantee

Received 6/3/2025
Planning & Building Department

If you have old aluminum, single pane windows, your money is literally flying out the window.

The Benefits of Better Glass

Because glass makes up the largest area of your window, it is the most important component to consider when replacing your windows.

With NewSouth's eVantage™ 366 Glass, you get the best Low E glass that is available, combined with NewSouth's exclusive, energy savings technology. The result:

1. A cooler more comfortable home
2. Better energy ratings means energy savings and money savings for you
3. Protect your furnishings from fading
4. Increase the life of your air conditioning units
5. Reduce the carbon footprint your home imposes on the environment.

All of this is standard, at factory direct prices, with no extra charges for you.

Our NewSouth Vantage™ Windows will not only save you energy and money, but will also add storm protection, security, and curb appeal to your home.

You'll wonder why you waited so long.

A beautiful window changes your entire outlook

eVantage™

Award Winning Energy Savings

DWM GREEN AWARD for ENERGY EFFICIENCY AWARD WINNING

The eVantage ™ Window is a cutting edge, award winning window designed for maximum energy efficiency, performance and strength. The ***"e"*** represents ***energy efficient, economical, ecological and ease of use.*** Manufactured with a unique technology that reduces energy transfer at the glass edge, and the best Low-E glass on the market, the eVantage offers superior energy efficiency which leads to energy savings.

Do you have old aluminum or wooden single pane windows? Ever feel like you can't get your house cool? You are literally wasting thousands of dollars year to year as air conditioning escapes from your home. This is bad for the environment and bad for your wallet. Stop the waste with eVantage.

iVantage™ 9000

Impact Resist Window

Energy Efficient + Hurricane Rated = You get the best of both worlds. No need to sacrifice one for the other.

Designed and tested to withstand the storms of South Florida, and approved to ***Miami-Dade's high velocity hurricane zone (HVHZ) standards***, the iVantage window offers protection and strength when you need it most. This protection can decrease your insurance rates, protect your home and family, and give you peace of mind during the stormy seasons.

Laminated glass in the iVantage Window is designed to resist penetration, thus preventing flying debris from entering your home. In addition, the entire sash frame is fully reinforced with high grade, ultimate tensile strength aluminum for consistent performance under pressure.

Beauty as well as brains and brawn! The Vantage windows have a unique and particular visual appeal that is unique in comparison to other impact windows. The mill-work duplicated exterior frame and the large viewing area offer a beautiful curb-side look that does not block your view.

Cut Out the Middleman

When you buy direct from our Florida NewSouth factory, you eliminate many layers of markups by dealers, wholesalers, distributors , suppliers and retailers. We pass the savings onto you, and you get a better window. The end result? You get more window for LESS MONEY!

Worry Free

Relax, Florida licensed, experienced window installers will take care of everything. Trained, courteous and mindful of your home, these professionals often complete your install within a few days. And NewSouth takes responsibility for the entire process. So easy for you, you'll wonder why you waited.

Lifetime Warranty

The entire window and the installation is covered with one of the best warranties in the industry. It's an unconditional, non-prorated, lifetime warranty for as long as you own your home... plus 1 year. If at anytime you experience a problem, we will fix it without the typical dealer hassle.

In Home Proposal

We bring the factory to you. With our free in home consultation and exact proposal , our factory representatives will measure to the inch and price to the penny. Call, click NewSouthWindow.com or visit our factory showroom today.

Application pg. 74

Instr #2025025202 BK: 6123 PG: 578, Filed & Recorded: 4/1/2025 2:50 PM #Pgs:2 Doc. D $6,545.00
Brandon J. Patty,Clerk of the Circuit Court and County Comptroller St. JohnsCounty FL Recording $18.50

Prepared by and Return To:
Diandra Williams
Florida Closing Company, LLC
731 A1A Beach Blvd
Saint Augustine, FL 32080

Order No.: 21-25-0067a

For Documentary Stamp Tax purposes the consideration is $935,000.00

Doc Stamp: $6,545.00

APN/Parcel ID(s): 202880-0000

WARRANTY DEED

THIS WARRANTY DEED dated MARCH 31ST, 2025, by William Kurt Druckenmiller, a married man and Eleanor Hobson Druckenmiller, an unmarried woman, hereinafter called the grantor, to Tyler L. Woods and Christine C. Clevenstine, trustees of the Clevenstine Woods Joint Trust Dated dated February 10,2015, whose post office address is 195 Cabeza St, Saint Augustine Beach, FL 32080, hereinafter called the grantee:

(Wherever used herein the terms "grantor" and "grantee" include all the parties to this instrument and the heirs, legal representatives and assigns of individuals, and the successors and assigns of corporations)

WITNESSETH: That the grantor, for and in consideration of the sum of Ten And No/100 Dollars ($10.00) and other valuable consideration, receipt whereof is hereby acknowledged, hereby grants, bargains, sells, aliens, remises, releases, conveys, and confirms unto the grantee, all the certain land situated in the County of St. Johns, State of Florida, to wit:

Lot 13, Block 46-G, of The City of St. Augustine, Florida, according to the official map of said city, dated June12, 1923, on file in the office of the Clerk of Circuit Court of St. Johns County, Florida.

Subject to easements, restrictions, reservations and limitations of record, if any.

The property being hereby conveyed, is not now, nor has it ever been, nor was it ever intended to be the homestead of the grantor, the grantor's spouse, and/or minor children, if any. Nor is it contiguous with or adjacent to such homestead. The grantor's residence is at the street or post office address designated below.

TOGETHER with all the tenements, hereditaments and appurtenances thereto belonging or in any wise appertaining.

TO HAVE AND TO HOLD the same in Fee Simple forever.

AND the grantor hereby covenants with said grantee that the grantor is lawfully seized of said land in fee simple; that the grantor has good right and lawful authority to sell and convey said land; that the grantor hereby fully warrants the title to said land and will defend the same against the lawful claims of all persons whomsoever; and that said land is free of all encumbrances, except taxes accruing subsequent to December 31, 2024.

WARRANTY DEED
(continued)

IN WITNESS WHEREOF, the undersigned have executed this document on the date(s) set forth below.

Signed, Sealed and Delivered in the presence of:

Phyllis A. Rabolt
Witness Signature

Phyllis A. RABOLT
Print Name

Address: 11 Berkshire CT
Wilmington De 19807

John F. Rabolt
Witness Signature

John RABOLT
Print Name

Address: 11 Berkshire CT
Wilmington De 19807

William Kurt Druckenmiller

Eleanor Hobson Druckenmiller

Address: 110 Campbell Rd
Wilmington, DE 19807

COPY

State of Delaware
County of New Castle

The foregoing instrument was acknowledged before me by means of [X] physical presence or [ ] online notarization, this 28 day of March, 2025 by William Kurt Druckenmiller & Eleanor Hobson Druckenmiller, to me known to be the person(s) described in or who has/have produced Drivers License as identification and who executed the foregoing instrument and he/she/they acknowledged that he/she/they executed the same.

Phyllis A. Rabolt
NOTARY PUBLIC
My Commission Expires: 8/23/27

Phyllis A. Rabolt
Notary Public
State of Delaware
20230801000021
Commission Expires August 23, 2027

St. Johns County, FL

Apply for Exemptions

Apply for Exemptions

Homestead Compliance

This form is not a Homestead Exemption application. To apply online for homestead and related exemptions, please click here.

Homestead Compliance

Sales Questionnaire Form

If you are a new owner of this property, please click here to submit a Sales Questionnaire

Sales Questionnaire

2024 TRIM Notice

2024 TRIM Notice (PDF)

Summary

Parcel ID	2028800000
Location Address	40 SANFORD ST SAINT AUGUSTINE 32084-0000
Neighborhood	City of St. Augustine (610)
Tax Description*	CITY OF ST AUG LOT 13 BLK 46-G OR6123/578 *The Description above is not to be used on legal documents.
Property Use Code	Single Family (0100)
Subdivision	City of St Augustine
Sec/Twp/Rng	18-7-30
District	City of St Augustine (District 452)
Millage Rate	18.72
Acreage	0.200
Homestead	N

Click Here to Open Cyclomedia Viewer in a New Tab

Owner Information

Owner Name	Clevenstine Woods Joint Trust D: 2-10-2015 100% Woods Tyler L Trustee 100% Clevenstine Christine C Trustee 100%
Mailing Address	40 SANFORD ST SAINT AUGUSTINE, FL 32084-0000

Exemption Information

Exemption Type	Status	Amount
Homestead	Future Year Exemption	$0

Additional Exemptions: Homestead

Map

Valuation Information

Assessed Year	2025
Valuation Method	Market
Building Value	$426,656.00
Extra Features Value	$54,657.00
Total Land Value	$226,720.00
Agricultural (Assessed) Value	$0.00
Agricultural (Market) Value	$0.00
Just Market	**$708,033.00**
Total Deferred	$32,830.00
Assessed Value	**$675,203.00**
Total Exemptions	$0.00
Taxable Value	**$675,203.00**

Values listed are from our working tax roll and are subject to change.

Historical Assessment Information

Year	Valuation Method	Building Value	Extra Feature Value	Total Land Value
2024	Market	$365,160	$52,467	$226,720
2023	Market	$369,724	$54,150	$226,720
2022	Market	$319,338	$936	$190,445
2021	Market	$286,885	$972	$147,368
2020	Market	$258,244	$1,008	$133,198
2019	Market	$221,723	$992	$123,279
2018	Market	$224,460	$1,027	$107,692
2017	Market	$204,817	$1,932	$107,692
2016	Market	$136,867	$1,300	$97,773
2015	Market	$126,744	$1,350	$75,101
2014	Market	$86,608	$1,402	$68,016

Building Information

Building	1	**Roof Cover**	Metal
Building Value	$426,656	**Roof Structure**	Gable Hip
Year Built	1958	**Interior Flooring**	Hardwood
Actual Area	2316	**Interior Wall**	Drywall
Conditioned Area	2064	**Heating Type**	Air Duct
Use	Single Family Residence	**Air Conditioning**	Central
Style	01	**Bedrooms**	3
Exterior Wall	Wood	**Baths**	3

Description	Square Footage
BASE AREA	951
FINISHED UPPER STORY	1113
UNFINISHED ENCLOSED PORCH	42
FINISHED DECK	48
FINISHED OPEN PORCH	162
Total SqFt	2316

Sketch Information

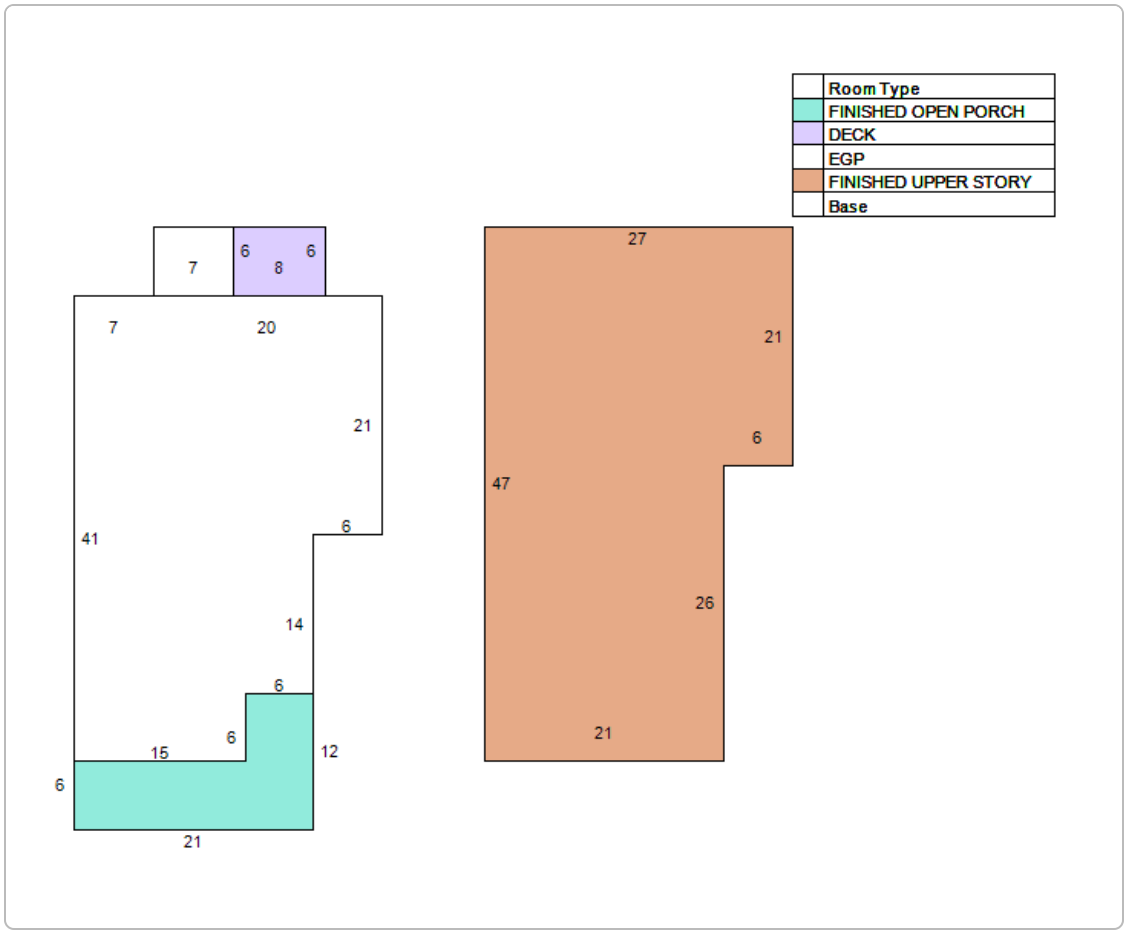

Extra Feature Information

Code Description	Status	Value
Storage Building (Mix)		2430
Storage Building (Mix)		3402
Pool - Average (RES)		41850
Spa / Hot Tub (Mix)		6975

Land Information

Use Description	Front	Depth	Total Land Units	Unit Type	Land Value
Single Family	52	153	52	EF	$226,720

Sale Information

Recording Date	Sale Date	Sale Price	Instrument Type	Book	Page	Qualification	Vacant/Improved	Grantor	Grantee
4/1/2025	3/31/2025	$935,000.00	TRUSTEES DEED	6123	578	Q	I	DRUCKENMILLER ELEANOR HOBSON	CLEVENSTINE WOODS JOINT TRUST D: 2-10-2015
1/30/2017	1/27/2017	$470,000.00	WARRANTY DEED	4323	756	Q	I	BONCZEK REVOCABLE TRUST D:10-6-2011	DRUCKENMILLER ELEANOR HOBSON
12/19/2014	12/18/2014	$210,000.00	WARRANTY DEED	3967	566	Q	I	WALSH IRENE M	BONCZEK REVOCABLE TRUST D:10-6-2011
8/16/2011	8/9/2011	$170,000.00	WARRANTY DEED	3464	1858	Q	I	TRAMMELL PAUL WILLIS	WALSH IRENE M
	2/18/1998	$86,000.00	WARRANTY DEED	1298	615	U	I	SNYDER JOHN J AS BISHOP OF THE DIOCESE ST AUG	TRAMMELL PAUL WILLIS
	2/1/1986	$0.00		697	2139	U	I		SNYDER JOHN J
	1/1/1977	$0.00		335	799	U	I		

Candice Seymour

From: G Da <glo99worm@aol.com>
Sent: Wednesday, July 2, 2025 9:40 AM
To: Candice Seymour
Subject: 58 Riberia

Caution: This email originated from outside of the organization. Do not click links, open attachments or respond unless you recognize the sender and know the content is safe. When in doubt, contact IT.

I found a welder who will repair the existing railing. So I withdraw my application.
Thank you,
Gloria Daniele

Candice Seymour

From: James Whitehouse <jameswhitehouse@sjlawgroup.com>
Sent: Monday, July 7, 2025 3:14 PM
To: Candice Seymour
Cc: James Whitehouse; victor@avsbuildersinc.com
Subject: RE: Historic Architectural Review Board Order from the June 18, 2025 Meeting

> **Caution:** This email originated from outside of the organization. Do not click links, open attachments or respond unless you recognize the sender and know the content is safe. When in doubt, contact IT.

Candice,

As discussed, we just received the structural engineer's updated report. We are in the process of evaluating the same. As such, we appreciate the additional time to review the same, work on our updated proposal, moving away from full demolition but still needing to address some additional partial demolition issues based upon his report, including lifting and moving the house to replace the foundation, some issues with the roof, and their hopes of having a porch and garage.

Accordingly, we will need a continuance to do the same and to meet with you the week after the HARB meeting when you are available. Please let us know when you have availability on July 21, 22 or 23 and we will come to meet and discuss with you so we have a fully appropriate request and staff evaluation for the August HARB meeting.

Thanks again,
James

James G. Whitehouse, Esquire
Attorney, Board Certified Expert*
Florida Supreme Court Certified Mediator - Circuit Civil

St. Johns Law Group
www.sjlawgroup.com

From: Candice Seymour <cseymour@citystaug.com>
Sent: Monday, July 7, 2025 1:00 PM
To: victor@avsbuildersinc.com
Cc: 'Elliott & Wanda Pacetti' <thepacettis@gmail.com>; James Whitehouse <jameswhitehouse@sjlawgroup.com>
Subject: RE: Historic Architectural Review Board Order from the June 18, 2025 Meeting

Good afternoon,

I am working on staff reports for this application and realized I have not received any new information. Are you planning to continue this item again? It's too late to submit additional information that can be included in the staff report; however, you always have the option to present new information at the meeting by providing 9 printed copies of that information for the Board and staff. Keep in mind it is at the Board's discretion whether to consider information newly presented at the meeting.

Let me know how you would like to proceed.

Hope you had a great holiday weekend!

Candice Seymour
Historic Preservation Planner
City of St. Augustine
cseymour@citystaug.com
904-209-4326

Please Note: Florida has a very broad Public Records Law. Unless specifically exempt by state law, written communications to city officials or staff regarding official city business are public records available to the public and media upon request. If your email communication is related to official government business, it may therefore be subject to public disclosure.

From: Candice Seymour
Sent: Monday, June 23, 2025 10:34 AM
To: victor@avsbuildersinc.com
Cc: 'Elliott & Wanda Pacetti' <thepacettis@gmail.com>
Subject: Historic Architectural Review Board Order from the June 18, 2025 Meeting

Find attached the order and findings regarding your application heard at the above-referenced meeting.

Have a good day!

Candice Seymour
Historic Preservation Planner
City of St. Augustine
cseymour@citystaug.com
904-209-4326

Please Note: Florida has a very broad Public Records Law. Unless specifically exempt by state law, written communications to city officials or staff regarding official city business are public records available to the public and media upon request. If your email communication is related to official government business, it may therefore be subject to public disclosure.

Candice Seymour

From: Milnes II, Christopher R <christopher.milnes@verizonwireless.com>
Sent: Monday, July 7, 2025 10:21 AM
To: Julie Courtney
Cc: Jeff Finch; Courtney Barnard; Nikki Nechtem; Justin Danahy; Candice Seymour
Subject: Re: [E] Verizon's HARB application

> **Caution:** This email originated from outside of the organization. Do not click links, open attachments or respond unless you recognize the sender and know the content is safe. When in doubt, contact IT.

Hi Julie:

Good morning. I hope you had a great Independence weekend! We will prepare for the August HARB meeting. We had thought the submission due date for the July HARB meeting was this Wednesday, a regrettable misinterpretation and we look forward to the August HARB meeting.

Thank you,

Christopher Milnes II

Senior Engr IV Spec-RE/Regulatory
Network Engineering

M 407 795 4626
3503 Technological Ave.
Orlando, FL USA 32817

On Mon, Jul 7, 2025 at 9:44 AM Julie Courtney <jcourtney@citystaug.com> wrote:

> Hello,
>
> We have looked on our portal but do not see anything that was submitted for the HARB application which was continued at the June meeting. Additional information for the July 15 HARB meeting was due by July 1, as stated in the attached order cover letter, because of the City being closed for Independence Day. Do you wish to request a continuance to the August 21 or later meeting because we can not really accept the information now when our packets are due to the HARB in the next day? If so, please send an email to harb@citystaug.com stating that.
>
> Thank you,
>
> Julie Courtney
> Historic Preservation Officer
> Planning & Building Department
> E jcourtney@citystaug.com | P 904.209.4283 | W www.CityStAug.com

CITY OF ST AUGUSTINE

MEMORANDUM

To: The Historic Architectural Review Board

Date: July 15, 2025

Re: Issued Planning and Building Permits – HP Districts & HARB Approved Projects

During the month of January 2025, the Planning and Building Department issued the following permits for projects meeting pre-approved guidelines and/or HARB approved plans.

REPAIR MAINTENANCE AND NEW CONSTRUCTION

164 Avenida Menendez (Re-roof, shingle to shingle)

186 Blanco Street (HARB-approved partial demolition)

155 Cordova Street (HARB-approved rear deck)

88 Marine Street (Re-roof multiple buildings, shingle to shingle)

103 Marine Street (HARB approved addition to detached garage)

103-1/2 Marine Street (Re-roof, metal 5v crimp to match existing)

105 St. George Street (Fire Alarm)

SIGNS

152 Saint George Street (Spartina 449: Installation of two (1) hanging sign off one bracket and 1 Facia Sign.)

Candice Seymour

Candice Seymour, Historic Preservation Planner