CITY OF
ST AUGUSTINE
EST. 1565

HISTORIC ARCHITECTURAL REVIEW BOARD

AMENDED

A G E N D A

THURSDAY, JANUARY 15, 2026 - 1:00 PM

ALCAZAR ROOM

---

1. Roll Call
2. General Public Comments for Items not on the Agenda
3. Approval of Minutes
   a) November 20, 2025–Regular Meeting
4. Modification and approval of Agenda
5. Recommended Expedited Hearing Items (to be recommended one week in advance)
6. Certificate of Appropriateness

*a)	HP2025-0074 CONTINUED FROM NOVEMBER 20, 2025 REQUESTING CONTINUANCE TO FEBRUARY 19, 2026	Central Southern Construction Services, LLC - Applicant and Owner 264 St. George Street To install a new metal gate across an existing driveway.
*b)	HP2025-0080 CONTINUED FROM DECEMBER 18, 2025 ADMINISTRATIVELY CONTINUED	Studio Femke - Applicant 58 Charlotte St LLC - Owner 58 Charlotte St For design changes to outdoor spaces.
c)	HP2025-0083	Shawn Lumley - Applicant Ivan Topalov - Owner 27 Grove Ave For after-the-fact-replacement of original wood windows with new wood windows of a different design.

7. Certificate of Demolition and Partial Demolition

a)	HP2025-0084	Gulfstream Design Group, LLC - Applicant City of St. Augustine - Owner 500 Anastasia Boulevard To demolish a commercial building, constructed c. 1971, that is recorded in the Florida Master Site File and not located in a district.
b)	HP2025-0087	A & O Builders LLC - Applicant True Real Estate Investments, LLC - Owner 7 Saragossa Street For partial demolition of a residential building, constructed c. 1917-1924, that is recorded in the Florida Master Site File and contributing to the Model Land Company National Register Historic District, to include after-the-fact wholesale replacement of windows with a different material and design and fenestration changes.

8. Certificate of Appropriateness - Large Projects

*a)	HP2025-0072 CONTINUED FROM NOVEMBER 20, 2025 REQUESTING CONTINUANCE TO FEBRUARY 19, 2026	Matthews | DCCM - Applicant Sisters of St. Joseph, Inc. - Owner 241 St. George Street To construct a new institutional building on the northern portion of the property with associated alterations and repairs to existing masonry perimeter walls and new hardscape and landscape designs.

9. Planning and Building Staff Communications
   a) Staff Approved Permits Report
10. Other Business
11. Next Scheduled Meeting Date(s):
    a) February 19, 2026 - Regular Meeting
12. Adjournment

Notices: In accordance with Florida Statute 286.0105: "If any person decides to appeal any decision made by the Historic Architectural Review Board with respect to any matter considered at this scheduled meeting or hearing, the person will need a record of the proceedings, and for such purpose the person may need to ensure that a verbatim record of the proceedings is made, which record includes the testimony and evidence upon which the appeal is to be based." In accordance with the Americans with Disabilities Act, persons needing a special accommodation to participate in this proceeding should contact the individual or agency sending notice not later than seven days prior to the proceeding at the address given on the notice. Telephone: (904) 825-1007 or 1-800-955-8771 (TDD).

Please note that one or more members of the City Commission or its appointed boards or committees may attend this meeting and participate, however they may not engage in a discussion or debate amongst themselves on any issue that will likely come before their respective elected or appointed body.

The materials prepared and presented are part of the City's ongoing Florida Public Records and Government in the Sunshine compliance, and are not intended to be relied upon or to reach investors or the trading markets.

CITY OF ST. AUGUSTINE

Historic Architectural Review Board Regular Meeting
November 20, 2025

The Historic Architectural Review Board met in formal session at 1:00 P.M., Thursday, November 20, 2025, in the Alcazar Room at City Hall, St. Augustine, Florida. Brad Beach, Chairperson, called the regular meeting to order, and the following were present:

1. ROLL CALL:

Brad Beach, Chairperson
Linda Potter, Vice-Chairperson
Paul Weaver, III
Catherine Duncan
Gaere MacDonald

City Staff:

Julie Courtney, Historic Preservation Officer
Candice Seymour, Historic Preservation Planner
Isabelle Lopez, City Attorney
Michele Fudo, Recording Secretary

---

2. General Public Comments for Items not on the Agenda

None

3. Approval of Minutes

None

4. Modification and approval of Agenda

MOTION

Ms. Duncan MOVED to APPROVE the Agenda as presented. The motion was SECONDED by Mr. Weaver.

VOTE ON MOTION:
AYES: Duncan, Weaver, MacDonald Potter, Beach
NAYES: NONE
MOTION CARRIED UNANIMOUSLY

5. Recommended Expedited Hearing Items (to be recommended one week in advance)

5. (a) Certificate of Demolition HP2025-0069 – Rolling Oaks Property Group, LLC – Applicant & Owner
16 Ferry Place

To demolish a residential building, constructed c. 1949, that is recorded in the Florida Master Site File and not located in a district.

Ms. Seymour read the staff report and said based on a review of the AGHP and without the support of evidence to the contrary, staff find that the board can APPROVE a Certificate of Demolition at 16 Ferry Place because it is not a local landmark or otherwise designated as a historic building.

James Thomas waived his right to a public presentation.

Ex Parte Communication:

(None)

7 certified notices were sent, 0 were returned in favor, 0 were returned opposed and 0 had comments.

Public hearing was opened; however, there was no response.

There was a brief discussion regarding the possibility of salvaging historical materials.

MOTION

Mr. MacDonald MOVED to APPROVE the demolition for application HP2025-0069 at 16 Ferry Place with no conditions other than a good faith attempt to salvage any historic materials. The motion was SECONDED by Ms. Duncan.

VOTE ON MOTION:
AYES: MacDonald, Duncan, Weaver, Potter, Beach
NAYES: NONE
MOTION CARRIED UNANIMOUSLY

5. (b) Certificate of Demolition HP2025-0075 – Casey Welch – Applicant
Casey Welch & Michael Mckoy – Owner
78A Chapin Street

To demolish a residential building, constructed c. 1917-1924, that is recorded in the Florida Master Site File and not located in a district.

Ms. Seymour read the staff report and said, based on a review of the AGHP and without the support of evidence to the contrary, staff find that the board can APPROVE a Certificate of Demolition at 78A Chapin Street because it is not a local landmark or otherwise designated as a historic building

Casey Welch waived his right to a public presentation.

Ex Parte Communication:

(None)

24 certified notices were sent, 1 was returned in favor, 0 were returned opposed and 1 had comments.

Public hearing was opened; however, there was no response.

There was a brief discussion regarding the possibility of salvaging historical materials.

MOTION

Ms. Duncan MOVED to APPROVE the demolition for application HP2025-0075 at 78A Chapin Street with a good faith effort to salvage any historic materials. The motion was SECONDED by Mr. Weaver.

VOTE ON MOTION:
AYES: Duncan, Weaver, MacDonald, Potter, Beach
NAYES: NONE
MOTION CARRIED UNANIMOUSLY

6. Certificate of Appropriateness

6. (a) HP2025-0068 – John Valdes & Associates, Inc – Applicant
Melissa & Patrick Sullivan – Owner
103 Marine Street

To construct a decorative balconet with shed roof extending from existing second-story windows on the front façade of the detached garage apartment.

Ms. Seymour read the staff report and said based on a review of the AGHP, and without the support of evidence to the contrary, staff finds that the board can APPROVE a Certificate of Appropriateness at 103 Marine Street if the HARB finds that the scope of work meets the Secretary of the Interior's Standards for Rehabilitation #9 as a compatible contemporary design mitigated by the balconet's limited visibility from Marine Street.

Steve Porter reviewed the application.

Ex Parte Communication:

(None)

Public hearing was opened; however, there was no response.
The Board agreed that the design was acceptable and there was consensus for approval.

MOTION

Ms. Duncan MOVED to APPROVE Certificate of Appropriateness HP2025-0068 at 103 Marine Street. The motion was SECONDED by Mr. Weaver.

VOTE ON MOTION:
AYES: Duncan, Weaver, MacDonald, Potter, Beach
NAYES: NONE
MOTION CARRIED UNANIMOUSLY

6. (b) HP2025-0074 – Central Southern Construction Services, LLC – Applicant & Owner
264 St. George Street

To install a new metal gate across an existing driveway.

Ms. Seymour read the staff report and said based on a review of the AGHP, and without the support of evidence to the contrary, staff finds that the board can CONTINUE a Certificate of Appropriateness at 264 St. George Street to allow the applicant time to provide additional information including clarification of the gate height and concrete post design and footer detail.

Kevin Brock reviewed the application.

Ex Parte Communication:

Mr. MacDonald advised he had had a conversation with the applicant's representative discussing the cost of the permitting as well as the fence. It was determined that the applicant had received a phishing scam email.

Public hearing was opened.

BJ Kalaidi said that when you come to live in the city there was an expectation of the costs to maintain the historic value of the city.

Public hearing was closed.

The Board discussed:

Ms. Duncan asked about the width of the new gate and was advised that it would be approximately sixteen feet. She said that there needed to be an elevation drawing provided for review. She thought that the gate should be narrower and she confirmed that the height would be three to four feet.

Mr. Weaver agreed that more detailed drawings needed to be provided. He thought the posts should be more substantial.

Mr. MacDonald suggested a twelve-foot gate with columns on both sides at four feet high to give the perception of height.

Mr. Potter thought that the proposal was lopsided because there was a wall on one side of the fence and only a column on the other.

The board discussed the style of the proposed gate to try to match the man gate in design. The consensus was that gate number 8213 was the closest match.

Mr. Beach said that the most important thing was to have two masonry columns for the gate to frame it for a better appearance.

MOTION

Mr. MacDonald MOVED to CONTINUE application HP2025-0074 at 264 St. George Street with the request for more detailed drawings, with the suggestion from the board to institute two masonry columns to mount the gates and four feet for the height with decorative finials at the top to match the existing man gate. The motion was SECONDED by Ms. Duncan.
VOTE ON MOTION:
AYES: MacDonald, Duncan, Weaver, Potter, Beach
NAYES: NONE
MOTION CARRIED UNANIMOUSLY

6. (c) HP2025-0070 – Design Cooperative, LLC – Applicant
58 Charlotte Street – Owner
58 Charlotte Street

To increase the height of an existing masonry wall along the south property line and modify the previously approved flat roof design to screen proposed mechanical equipment; and, to construct a pergola across the previously approved rear courtyard space.

Ms. Seymour read the staff report and said based on a review of the AGHP, and without the support of evidence to the contrary, staff finds that the board can APPROVE a Certificate of Appropriateness at 58 Charlotte Street if the HARB finds that proposed scope of work meets the Secretary of the Interior's Standards for Rehabilitation #9 as a compatible contemporary design.

Milan Milanovic reviewed the application.

Ex Parte Communication:

(None)

Public hearing was opened; however, there was no response.

The Board discussed:

- The proposed pergola was huge and out of proportion compared to the small trellis that was approved previously
- Suggested calling this a grape arbor rather than pergola as an arbor would have been present in historic St. Augustine
- The pergola would have been post-civil war era
- The drawings from Manucy's showed the arbors to be much smaller
- There could be a need for a cross bar for support that would add mass to the structure
- With the wall being raised the arbor would not be visible from the street
- The bright white color was a concern
- Removing the end bays and letting the edges cantilever to keep them from touching the walls would reduce the mass
- Confirmed that the material would be wood and the applicant was agreeable to whatever the board suggested for the color
- Agreed that while this was very large, it was hidden from the street
- The poles needed to be rougher and more worn to fit the period
- Cedar or Cypress would be acceptable materials for the arbor construction
- Enclosing the flat part of the roof would be acceptable
- Agreed with the suggestions of the board regarding reducing the overall size and the materials used
- Brackets would have to be used to support the arbor and keep it from swaying
- Place a pole by the wall and in the center and then cantilever from the center pole about three feet to the other bay area

MOTION

Mr. MacDonald MOVED to APPROVE HP2025-0070 at 58 Charlotte Street the existing flat roof on the original structure to be a space to hide and shield the air conditioning unit; the arbor would be CONTINUED to the December 18, 2025 meeting to allow the applicant time to provide a new rendition that was more rustic and separated from all structures with bracketing as suggested by the HARB. The motion was SECONDED by Mr. Weaver.
VOTE ON MOTION:
AYES: MacDonald, Weaver, Duncan, Potter, Beach
NAYES: NONE
MOTION CARRIED UNANIMOUSLY

6. (d) HP2025-0073 – Bar Harbor Cheesecake Company LLC – Applicant
Authentic Old Jail, Inc – Owner
6 Cordova Street

For temporary installation of wooden pergolas in the front and side yards

facing the Historic Preservation-Three (HP-3) zoning district.

Ms. Seymour read the staff report and said based on a review of the AGHP, and without the support of evidence to the contrary, staff finds that the board can APPROVE a Certificate of Appropriateness at 6 Cordova Street if the HARB finds that the proposed temporary pergola installation, as proposed or modified by the HARB, are a reasonably compatible contemporary design with the following conditions:

1. Proposed visqueen or plastic material is visually screened by plant material(s)
2. The pergolas be completely removed by January 30, 2026
3. Pergolas can be installed in the same locations for subsequent Nights of Lights seasons with any modifications subject to HARB approval.

Amy Tilbury reviewed the application.

Ex Parte Communication:

(None)

Public hearing was opened.

BJ Kalaidi said she was concerned that code enforcement had been involved with this applicant in 2024. She felt that the HARB should have been involved from the beginning.

Ms. Tilbury provided her rebuttal.

Public hearing was closed.

The Board discussed:

- Did not like the idea of temporary construction but would support permanent
- Verified that one pergola was in front of the building
- There was concern with crowd control
- People were purchasing cheesecake under the pergola to take with them
- Based on the pictures in the packet, the placement of the pergolas seemed out of place
- The pergolas would be in places that met code
- The coloring should be more authentic
- This would be temporary through Nights of Lights
- The decorations on the pergolas would be white Christmas lights with pine boughs on the top

MOTION

Ms. Duncan MOVED to APPROVE application HP2025-0073 at 6 Cordova Street to install temporary wooden pergolas without lights to have a canvas cover and be removed by January 30, 2026. The motion was SECONDED by Mr. Weaver.

<u>VOTE ON MOTION:</u>
AYES: Duncan, Weaver, MacDonald, Potter, Beach
NAYES: NONE
MOTION CARRIED UNANIMOUSLY[1]

<u>6. (e) HP2025-0072 – Matthews | DCCM – Applicant</u>
<u>Sisters of St. Joseph, Inc – Owner</u>
<u>241 St George Street</u>

To construct a new institutional building on the northern portion of the property with associated alterations and repairs to existing masonry perimeter walls and new hardscape and landscape designs.

Ms. Seymour read the staff report and said based on a review of the AGHP, and without the support of evidence to the contrary, staff finds that the bord can take the following actions for a Certificate of Appropriateness at 241 St. George Street:

[1] Break 2:44 – 2:58 pm

1. APPROVE if the board finds that the new structure meets the Secretary of the Interior's Standards for Rehabilitation #9 as a compatible contemporary design along the streetscape and within the HP-1 district as presented or modified by the HARB; OR,
2. CONTINUE to allow the applicant time to submit additional details as required by the Board for approval

Shane Larsen and Hal Bowers reviewed the application.

Ex Parte Communication:

(None)

Public hearing was opened; however, there was no response.

The Board discussed:

- The process was going in the right direction
- Looked at the elevations in general and specifically wanted to pause to make sure there would be a rhythm and pattern for the hierarchy of the building
- Would like to see fewer competing elements in the design
- Proposed fewer porches in the wrap around style or simplifying them so that they were not the main feature
- The red color of the brackets was shared with the windows and doors throughout the building
- Was it possible to remove some of the brackets, there appeared to be too many
- The façade could be emphasized in a different way
- The inspiration for the wrap around porch had come from Flagler College
- The original footprint of the school was being used for the new building
- Removing the brackets that were not needed structurally was a good idea
- The scale and setbacks were compatible compared to what had existed before with the school
- The guiding principles were to mirror the existing mother house in the new construction
- A wood clad window was being considered, specifically Pella
- The wood window was appropriate and would add authenticity
- The clad window could be used on the third floor
- There was flexibility on the upper floors with window choices
- The second and third floor would be the sister's private quarters
- The first-floor windows would have a flat arch and would be somewhat hidden from Cadiz Street because of the coquina wall
- The new design fenestration had been articulated well
- The Kolby window was a good choice as they had a history of lasting longer with the weather conditions in the area
- The profile would match well with the existing structure regarding the windows
- Windows were usually approved on a case-by-case basis, especially with historic buildings
- New construction had more flexibility; however, the Secretary Standards of Rehabilitation should be respected
- Construction was slab on grade
- There would be no steps going into the building

Mr. Beach had noted some changes on the applicants' drawings and displayed those changes with an explanation of what he was thinking for the applicant. He suggested that his ideas would make the fenestration less busy.

- The suggestions seemed to give a balance to the building
- The existing south column would be kept for the gate on St George Street with an expansion to thirty-two feet from the current size of eighteen feet to allow access for emergency vehicles

DRAFT

- It would be a rolling gate that would not be seen when open and was no taller than the wall surrounding the property
- The gate would be open in the daytime and closed at night
- The current gate was not in its original position
- There was a fence around the retaining wall near the pond that seemed out of place
- Code required a three-foot fence with this type of pond
- Elongating the pond could possibly lessen the height requirement
- Roof tile and window samples would be provided
- Wanted to see the proposed landscape plan on the rendering especially at the porta cochere and the corner of St. George and Cadiz Streets
- Materials for the driveway would be pervious paver in brick
- Mechanical area on top of the roof had a substantial wall to conceal any equipment
- There was an opportunity to lower the roof over the stair

MOTION

Mr. MacDonald MOVED to CONTINUE application HP2025-0072 at 241 St. George Street to the December 18, 2025 meeting. The motion was SECONDED by Mr. Weaver.

VOTE ON MOTION:
AYES: MacDonald, Weaver, Duncan, Potter, Beach
NAYES: NONE
MOTION CARRIED UNANIMOUSLY

7. Continued Items from the previous HARB meetings

7. (a) Certificate of Appropriateness HP2025-0057 – 44 Avenida Menendez, LLC/Riverview Partners One, LLC – Applicant
44 Avenida Menendez, LLC – Owner

44 Avenida Menendez
Continued from September 18, 2025

For after-the-fact approval of rooftop cabana structures, lighting fixtures, and other design elements that were not previously approved under Certificate of Appropriateness PL2021-0121.

Mr. Weaver recused himself from this application.[2]

Ms. Courtney read the staff report and said based on a review of the AGHP, the previous discussions of the HARB for earlier OOA and COA applications, and without the support of evidence to the contrary, staff finds that the board can take the following actions regarding a Certificate of Appropriateness at 44 Avenida Menendez:

1. APPROVE if the board finds that the additional features/design elements installed after the approved plans are compatible with the AGHP and/or Manucy's Houses of St. Augustine and meets the Secretary of the Interior's Standards for Rehabilitation #3 and #9
2. CONTINUE with a finding that the overall design of the added elements are not compatible with the AGHP and/or Manucy's Houses of St. Augustine and to allow time for the applicant to alter the existing designs or placement, as recommended by the HARB

John Arbizanni and Chris Duche reviewed the application.

Ex Parte Communication:

(None)

Public hearing was opened.

BJ Kalaidi said that this owner had been in this town long enough to know what was expected. She asked why this owner did what was done without going to HARB and

[2] Recusal form with original minutes

making them aware of what they wanted to do. She said that this town was historical and it was important to maintain that history and the HARB was there to accomplish that.

Mr. Arbizanni provided his rebuttal.

Public hearing was closed.

The Board discussed:

- Initially this applicant came to HARB for approval
- The applicant had chosen not to get approval for the changes they had made
- Reminded the applicant that though this was the 21st century, the city was an historic city
- Thought that the previously approved design was very good and there was never the intention of having a roof top bar on the building
- In the period of the building, people did live on the second floor, but there were no roof top bars
- The blue canvas umbrellas were a nice feature
- The other changes were a violation that had been continued, and should have gone to code
- Many of the historic buildings had become restaurants and bars and roof top entertainment was a thing
- Not in favor of having that feature as it was not a part of the history of the city
- If it could be done without drawing attention it would be acceptable
- The cabanas were not acceptable the way they were presented
- A roof top terrace with planters would be more fitting
- Lighting was to be approved in every situation to be sure that it was period appropriate
- If the lighting in the courtyard was not visible, it could work
- A rooftop terrace should have a simpler design and presentation
- Agreed roof top simplicity was the key and the more modern elements should be removed
- The gutter on the second floor should be removed
- The globe lights in the courtyard could stay as long as they were not visible from the street
- The cabanas should be removed or moved out of the view of the sight lines completely.
- A trellis type structure could be used in place of the cabanas
- The applicant said the seating would be kept and the cabanas would be removed
- The green wall on the parapet wall would be removed and replaced with live plants

MOTION

Mr. MacDonald MOVED to APPROVE application HP2025-0057 at 44 Avenida Menendez with the following conditions: the green screening would be removed on the second floor; the cabanas would be removed from the second floor as well as the globe lighting; live plants were acceptable. The horizontal gutter would be removed from the front of the building; the K-gutter in white was acceptable the globe lights in the rear courtyard were acceptable; staff would approve the metal screen for the window; the blue umbrellas would be acceptable. The motion was SECONDED by Ms. Duncan.

VOTE ON MOTION:
AYES: MacDonald, Duncan, Potter, Beach
NAYES: NONE
MOTION CARRIED UNANIMOUSLY[3]

7. (b) Certificate of Appropriateness HP2025-0053 – Rogers Towers, PA – Applicant
Kasam Hospitality, Inc – Owner
24 Cathedral Place and Charlotte Street (PID 1972000000)
Continued from August 21, 2025

[3] Break 5:10 – 5:24 pm

To construct commercial buildings on the west side of Charlotte Street and south side of Treasury Street to flank a new parking garage on the existing parking lot, related to an adaptive use project of the existing buildings.

Ms. Courtney read the staff report and said based on a review of the AGHP, reviews and discussions by the HARB during the previous Opinion of Appropriateness and Certificate of Appropriateness hearings, and without the support of evidence to the contrary, staff finds that the HARB can take the following actions related to the existing historic building, the new buildings, site plan, landscape, hardscape, and streetscape plans, and other related features and design elements proposed in a Certificate of Appropriateness at 24 Cathedral Place and Charlotte Street:

To CONTINUE to allow the applicant time to provide more specifications of the proposed elements and to incorporate any revisions recommended by the HARB to the proposed new buildings fronting Charlotte and Treasury Streets, the landscape, hardscape and streetscape plans, and the proposed rehabilitation/restoration for the existing historic buildings

Les Thomas, Freemont Latimer, Mike Koppenhafer and Ellen Avery-Smith reviewed the application.

Ex Parte Communication:

Mr. Weaver had a call from John Regan to go to a meeting with one other board member; however he declined to attend, and there was a brief conversation regarding the roof top.

Mr. Beach had a video call with Mr. Regan to review the project.
Mr. MacDonald also had a brief call with Mr. Regan; their conversation was about windows.

Ms. Potter had a call from Mr. Regan; she declined, saying that it should be before the entire board.

Ms. Duncan also declined to meet, saying that the board wanted more visual samples for clarification.

Mr. Koppenhafer reviewed the application focusing on the comments from the board at the previous meeting.

Public hearing was opened.

BJ Kalaidi commented that putting a bar on the roof made it a fourth floor. She asked if the umbrellas would be stationary or portable.

Mr. Koppenhafer provided his rebuttal.

Public hearing was closed.

The Board discussed:

- Could umbrellas be used for shade rather than the roof feature
- The style of architecture was period appropriate
- The connecting structure between the stair and elevator gave the appearance of a fourth floor
- The structure would not be visible from the street, and should blend in when viewed from the Bridge of Lions
- It seemed that the height was too much
- This was part of an approved PUD that allowed for higher limits
- HARB had the discretion to determine mass and scale
- This was an open structure that allowed a view of the pool area from the tower building
- The hip roof with tile looked heavy and would have a prominent view from the Bridge of Lions
- This structure needed to blend with the level of the parapet
- The style of Spanish Mediterranean would be seen from the Bridge

- The location of the pool should not change
- The elevator shaft and the staircase were for ADA (American with Disabilities Act) compliance and could not be moved
- Removing the connecting roof would decrease the mass and visibility of the structure or changing to a flat roof with a stucco color
- Tiles from the original building would be repurposed into the new building
- The windows were shown that would be used in the colonial style building
- These were mahogany wood windows to be used on the first floor
- An aluminum clad wood window would be used on the second and third floors, this was for the colonial building only
- Second and third floor could use a composite window with muntins or the Pella Aluminum Clad Wood window
- The louvres on the Treasury Street side of the building would be a wide metal louvre

MOTION

Ms. Potter MOVED to CONTINUE application HP2025-0053 to the December 18, 2025 meeting including the alterations for the construction on the fourth floor i.e. removing the roof structure. The motion was SECONDED by Mr. MacDonald.

VOTE ON MOTION:
AYES: Potter, MacDonald, Weaver, Duncan, Beach
NAYES: NONE
MOTION CARRIED UNANIMOUSLY

7. (c) Certificate of Appropriateness-City Owned Property HP2025-0011 – CBVR Telecom Design Group and Cellco Partnership Successor in Interest to Verizon Wireless – Applicant
Various areas within/adjacent to existing City rights-of-way within Historic Preservation Zoning Districts 1 through 5
To install new cell antennas and related cellular equipment in proposed locations.

Ms. Courtney read the staff report and said based on a review of the AGHP, the previous discussions of the HARB, and without the support of evidence to the contrary, staff finds that the board can take the following actions regarding a Certificate of Appropriateness for the proposed small cell antennas limited to the locations at the Toques Place parking lot and adjacent to 69a Cordova Street:

1. APPROVE if the board finds that the designs are compatible with the AGHP and meets the Secretary of the Interior's Standards of Rehabilitation #9 (Compatible Contemporary Design for New Alterations and Additions)
2. CONTINUE with a finding that the overall designs are not compatible with the AGHP and to allow time for the applicant to alter the existing designs or placement, as recommended by HARB
3. DENY if the HARB determines any of the following:
   a. The proposed overall design of the cell antennas and related equipment is inappropriate within the historic context of its proposed location and the high visibility within the right-of-way will have a negative impact to the architectural, historical, and cultural integrity of the significant Town Plan National Historic Landmark (NHL) area and the St. Augustine National Register Historic District (NRHD), and the proposed locations within HP-2 and HP-3
   b. The cellular equipment does not meet the criteria of the Secretary of the Interior's Standards (SOIS) for Rehabilitation 2, 5, 8, or 9
   c. The proposed design and location cannot be mitigated in a desirable way that would meet the requirements of the AGHP and/or SOIS

Per State Statute 337.401(7)(k), HARB's authority is not limited to enforce historic preservation zoning regulations consistent with the preservation of local zoning authority

under 47 U.S.C.s.332(c)(7) (see language in attachments).
Courtney Barnard, Jack Finch, and Chris Milnes reviewed the application.

Ex Parte Communication:

(None)

Public hearing was opened; however, there was no response.

The Board discussed:

Mr. Weaver asked for a recap of the criteria that the board should be using to decide this application.

Mr. Beach asked why the light on Cordova was Cobra Hang rather than the updated fixture to match Toques Place.

Mr. Milnes explained that because it was an actual streetlight and that fixture would not change until the upgrades to the streetscape were completed.

Mr. Weaver described the antenna on Riberia Street that was screened with a palm tree and he thought that was appropriate.

Ms. Lopez summarized for the applicant, the HARB suggested an additional palm tree in the Toques Place parking lot to add extra screening for the antenna in that lot.

MOTION

Mr. Weaver MOVED to APPROVE application HP2025-0011 with the following conditions: when the new streetscape plan was implemented the fixture on Cordova was changed to match and a palm tree was added to the Toques Place parking lot and that tree would be maintained in perpetuity. The motion was SECONDED by Ms. Duncan.

VOTE ON MOTION:
AYES: Weaver, Duncan, MacDonald, Potter, Beach
NAYES: NONE
MOTION CARRIED UNANIMOUSLY

8. Planning and Building Staff Communications

8. (a) Staff Approved Permits Report

(Provided for informational purposes)

9. Other Business

9. (a) Review and Approval of 2026 HARB Meeting Schedule

The board approved the 2026 calendar with consensus

9. (b) Follow-up to Model Land Company National Register Historic District Update:

Public Informational Meeting to be held on Tuesday, December 9, 2025, at 5:30 pm

10. Next Scheduled Meeting Date

10. (a) December 18, 2025 – Regular Meeting

11. Adjournment

There being no further business, the meeting was adjourned at 8:03 P.M.[4]

_____
Brad Beach, Chairperson

[4] Transcribed by Michele Fudo

From:	Ashley Erin
To:	Harb
Subject:	Continuance for Harb application
Date:	Wednesday, January 7, 2026 12:01:55 PM
Attachments:	264StGeorgeGatesigned.pdf

> **Caution:** This email originated from outside of the organization. Do not click links, open attachments or respond unless you recognize the sender and know the content is safe. When in doubt, contact IT.

Hi,
Based on the review I received for our application, I enlisted the help of a local architect to render a drawing for the proposed gate we want to put in at 264 St George St.
I did not get it to Michelle in time for this month's meeting, so I will need to ask for another continuance to go on the next HARB meeting for a previously tabled item.

The rendering is attached.

Please let me know if you need anything else from me regarding this.

Thank you,
Ashley Bucci
264 St George St

COA HP2025-0080
58 CHARLOTTE STREET

APPLICATION ADMINISTRATIVELY CONTINUED TO THE FEBRUARY 19, 2026 HARB MEETING

NO ADDITIONAL INFORMATION RECEIVED

CITY OF ST AUGUSTINE EST. 1565

CITY OF ST. AUGUSTINE HISTORIC ARCHITECTURAL REVIEW BOARD
STAFF REPORT AND RECOMMENDATION
Prepared for January 15, 2026 Meeting

Application HP2025-0083 Address: 27 Grove Avenue

Applicant: Shawn Lumley

Property Owner: Ivan Topalov

Project description: For after-the-fact replacement of original wood windows with new windows of a different design.

Architectural Style:	Frame Vernacular	Florida Master Site File:	SJ00902
National Register:	North City NRHD: Contributing	Construction date:	c. 1894-1899
Archaeology Zone:	N/A	Zoning District:	HP-5
Parcel number:	1939500000		
Agenda Item:	6(c)	Previous Action(s):	COA 2000-0076 COA 2001-1002

STAFF SUMMARY AND ANALYSIS:

1. This two-story Frame Vernacular Residence is located on the south side of Grove Avenue within the Historic Preservation-Five (HP-5) zoning district.
2. The applicant is seeking after-the-fact approval for use of 4/4 wood windows rather than the 2/2 wood windows that were administratively approved under the issued building permit.
3. According to the Architectural Guidelines for Historic Preservation (AGHP), replacement windows must match the original in material, size, general muntin and mullion proportion and configuration, and reflective qualities of the glass. If these requirements are met, staff generally administratively approves such permits.
4. On January 21, 2025, the applicant submitted a building permit for renovations which included replacement of deteriorated 2/2 windows. Staff requested additional information on January 28, 2025 and by February 24, 2025 the applicant submitted photographs of the existing windows and specifications for the proposed Kolbe Heritage Series replacement windows. An email thread (attached) then ensued as staff made attempts to clarify the muntin pattern for the replacement windows which the applicant then confirmed were 2/2 to match existing. Staff approved the permit, including the condition that the windows be 2/2 to match existing, and the permit was issued on April 21, 2025.
5. Historic Preservation inspection was completed on December 8, 2025, as requested by the applicant, and revealed that the wood replacement windows feature a 4/4 muntin pattern. The applicant was advised to either fix the muntin pattern or seek HARB approval for the new pattern.
6. The AGHP states that Post-1821 Frame Vernacular windows are usually double hung sash 2/2 or 1/1, with 6/6 and 6/1 also used locally. 8/1, 4/1, and 3/1 were less frequently utilized, and only after the turn of the century.

STAFF RECOMMENDATION:

Based on a review of the AGHP, and without the support of evidence to the contrary, staff finds that the board can **take the following actions for an after-the-fact Certificate of Appropriateness at 27 Grove Avenue**:

1. **CONTINUE** to allow the applicant time to consider a muntin pattern more appropriate to the architectural style and time period of the structure; or,
2. **APPROVE**, if the HARB finds that the 4/4 windows meet the Secretary of the Interior's Standards for Rehabilitation #9 as a compatible contemporary design that maintains the historic character and integrity of the structure.

Candice Seymour

Candice Seymour, Historic Preservation Planner

SUMMARY SCOPE OF WORK:

1. Removal of 2/2 wood windows
2. Replacement with 4/4 wood windows

CITY CODES/DESIGN GUIDELINES:

ARCHITECTURAL GUIDELINES FOR HISTORIC PRESERVATION

Secretary of the Interior's Standard's for Rehabilitation 2, 3, 6, and 9 apply.

2. Retention of Distinguishing Architectural Character
3. Recognition of Historic Period
6. Repair or Replacement of Deteriorated or Missing Architectural Features Based on Historic Evidence
9. Compatible Contemporary Design for New Alterations and Additions

Windows and Window Treatments

Do...

- Retain and repair window openings, frames, sash, glass, lintels, sills, pediments, architraves, hardware, shutters and balconies where they contribute to the architectural and historic character of the building.
- Conduct an in-depth survey of the conditions of existing windows, shutters and balconies early in rehabilitation planning so that repair and upgrading methods and possible replacement options can be fully explored.
- Protect and maintain the wood and architectural metal which comprise the windows (including frame, sash, muntins and surrounds), shutters and balconies through appropriate surface treatments such as cleaning, rust removal, limited paint removal and re-application of protective coating systems.
- Repair windows, shutters and balconies by patching, splicing, consolidating or otherwise reinforcing. Such repair may include replacement in kind of those parts that are either excessively deteriorated or are missing when there are surviving prototypes.
- Improve the thermal performance of existing windows through adding or replacing weatherstripping and adding storm windows which are compatible with the character of the building, and which do not damage window frames.
- Replace missing or irreparable windows on significant elevations with new windows that match the original in material, size, general muntin and mullion proportion and configuration, and reflective qualities of the glass.
- Design and install new windows when the historic windows are completely missing. The replacement may be an accurate restoration using historical, pictorial and physical documentation; or may be a new design that is compatible with the window openings and the historic character of the building.

Don't...

- Introduce or change the location or size of windows and other openings that alter the architectural and historic character of the building.
- Remove window features that can be repaired where such features contribute to the historic and architectural character of the building.
- Change the size or arrangement of window panes, muntins and rails where they contribute to the architectural and historic character of the building.
- Replace windows that contribute to the character of a building with those that are incompatible in size, configuration and reflective qualities or which alter the setback relationship between window and wall.

Post-1821

<u>Frame Vernacular</u> windows are usually double hung sash two-over-two or one-over-one. Locally, six-over-six and six-over-one are also common, but are seldom used after about 1920. Prior to the turn of the century, nine-over-six and eight-over-eight windows are also used. After the turn of the century, eight-over-one, four-over-one, three-over-one, and less commonly jalousie windows are also used. Attic louvers in the gable ends, and casement windows with various numbers of panes are common in all time periods.

LIST OF ATTACHMENTS:

1. Staff Photographs
2. Florida Master Site File
3. Email Thread with Contractor Confirming Muntin Pattern

STAFF PHOTOGRAPHS
27 Grove Avenue

Front (north) Elevation

STAFF PHOTOGRAPHS
27 Grove Avenue

Front (north) Elevation

STAFF PHOTOGRAPHS
27 Grove Avenue

East Elevation

STAFF PHOTOGRAPHS
27 Grove Avenue

West Elevation

STAFF PHOTOGRAPHS
27 Grove Avenue

South Elevation

STAFF PHOTOGRAPHS
27 Grove Avenue

Window Details

STAFF PHOTOGRAPHS
27 Grove Avenue

Google Streetview February 2023

FLORIDA MASTER SITE FILE

HISTORIC ST. AUGUSTINE PRESERVATION BOARD

HISTORIC PROPERTIES INVENTORY FORM

I. LOCATION & LEGAL DESCRIPTION

FDAHRM 802== Site No. 8SJ 902 1009==

Site Name: 27 Grove Avenue 830== Survey Date: 7902 820==

Address: 27 Grove Avenue, St. Augustine, Fla. 32074 905==

Instructions for Locating:

813== County: St. Johns 808==

Location: Kingsland Addition (subdivision) (block) 13 (lot) 868==

868==

Owner of Site: Name: Partin, George H. and Lois S. ;

Address: 22 Lakeshore Drive

St. Augustine, Fla. 32084 902==

Occupant or Manager: 904==

Type of Ownership: Private 848== Zoning: HP3

NR Classification Category: Building 916== Recording Date: 832==

UTM: 17 (zone) 469362 (easting) 3307505 (northing) 890== Location: T07S (T) R30E (R) N18 (S) 812==

Map Reference: USGS St. Augustine 7.5 MIN 1956 (PR 1970) 809==

Recorder: Name & Title: Nolan, David (Historic Sites Specialist) ;

Address: H. S. A. P. B. 818==

II. SITE DESCRIPTION

Condition of Site:

( ) Excellent 863==

( ) Good 863==

(X) Fair 863==

( ) Deteriorated 863==

Integrity of Site:

(X) Altered 858==

( ) Unaltered 858==

(x) Original Site 858==

( ) Restored - Date: 858==

( ) Moved - Date: 858==

Threats to Site:

( ) Zoning 878==

( ) Development 878==

( ) Deterioration 878==

( ) Borrowing 878==

( ) Transportation 878==

( ) Fill 878==

( ) Dredge 878==

( ) Other 878==

SEE SITE FILE STAFF FOR ORIGINAL PHOTO(S) OR MAP(S)

II. SITE DESCRIPTION, continued.

Original Use: Priv. Residence 838== Present Use: Priv. Residence 850==

Date: +1899 844== Period: 19th Cent. 845== Culture: American 840==

Architect: 872==

Builder: 874==

Style: Frame vernacular 964==

Plan Type: L-shape 966==

Exterior Fabrics: Wood, dropside with cornerboards 854==

Structural Systems: Wood frame 856==

Features of Structure: (942)

Window Type: DHS, 2/2 (metal), french doors, attic louver, metal jalousie 942==

Foundation: Concrete block piers 942==

Roof Type: Gable 942==

Secondary Roof Structures: Hip and shed porches 942==

Porches & Balconies: 942==

Chimney Location: Outer, ridge 942==

Materials: (882)

Chimney: Brick 882==

Roof Surfacing: Composition shingles 882==

Ornament Exterior: Chamfered posts; decorative porch railing 882==

Quantitative Data: (950-954)

Chimneys: 1 952== Dormers: 954== Stories: 2 950==

Other: 956==

Surroundings: Residential 864==

Relationship to Surroundings: 859==

III. PHOTOGRAPHY

Photographic Records Numbers: 860==

Contact Prints

IV. SIGNIFICANCE

Areas of Significance: Architecture

920==

Statement of Significance: (911==)

ARCHITECTURE

This is a two-story Frame Vernacular house constructed between 1894 and 1899. Victorian elements still visible on this two-story private residence are the chamfered wood posts and the decorative porch railing.

Kingsland Additions was developed between 1887 and 1930 as a North City residential area, and includes both Victorian and early 20th century homes, the later ones showing the influence of the bungalow style. Many of the later homes use some form of locally produced coquina concrete block, popular in St. Augustine construction in the 1920's and 1930's.

Grove Avenue, with 16 surviving 19th century buildings, is one of the significant victorian neighborhoods of the city. This is one of the older homes on the street and in the North City area. The neighborhood is threatened generally by traffic and commercial encroachments from US 1, San Marco Avenue, and Castillo Drive, encouraged by current zoning practices.

HISTORY

Kingsland Addition was once within the colonial perimeter known as Mil y Quinientos [The Fifteen Hundred]. Juan Triay, a Minorcan, was the first to secure a land grant here from Governor Jose Coppinger in 1807. [1] Part of the grant eventually passed to Captain John Masters, who was involved in the capture of the Seminole Chief Osceola. In 1875 Masters conveyed most of the former Triay Grant to Henry P. Kingsland, a banker from New York City. Kingsland began subdividing his property shortly after its purchase, and in 1887 the land was officially platted. [2] By the 1920's and 1930's Grove Avenue was the home of several families of cigar makers, and two cigar manufacturing establishments. Today the former farmland remains primarily residential with a scattering of commercial establishments along San Marco Avenue.

One of the residents of this house between 1927 and 1930 was Boyd O. Berry, the proprietor of the St. Augustine Stone Works and Building Supply Company on Loreida Street, which specialized in "Cement blocks, cement building products, coquina blocks, coquina bricks and concrete products". [3] The coquina concrete block construction style was popular in St. Augustine during this time.

V. BIBLIOGRAPHY

1. Works Project Administration, Spanish Land Grants in Florida, 5 Vols. [Tallahassee, 1940], III, 13-14; V, 172-175. American State Papers; Public Lands, 5 Vols. [Washington: Duff Green], V, 414.
2. St. Johns County Courthouse, Deed Records, Book H, p. 350; Biographical File, SAHS.
3. St. Augustine City Directory, 1927-28, 1930, 1934.

ODAK SAFETY FILM 5062

27

Candice Seymour

From: Shawn Lumley <lumleyshawn3@gmail.com>
Sent: Thursday, February 27, 2025 2:29 PM
To: Candice Seymour
Subject: Re: BP2025-0116 - 27 Grove Avenue

> **Caution:** This email originated from outside of the organization. Do not click links, open attachments or respond unless you recognize the sender and know the content is safe. When in doubt, contact IT.

Yes, they are. All the patterns are the same just different size openings.

On Thu, Feb 27, 2025, 2:21 PM Candice Seymour <cseymour@citystaug.com> wrote:

> Can you confirm that they're 2/2? It looks like some of them may not be?
>
> **Candice Seymour**
>
> Historic Preservation Planner
>
> City of St. Augustine
>
> cseymour@citystaug.com
>
> 904-209-4326
>
> *Please Note:* Florida has a very broad Public Records Law. Unless specifically exempt by state law, written communications to city officials or staff regarding official city business are public records available to the public and media upon request. If your email communication is related to official government business, it may therefore be subject to public disclosure.

From: Shawn Lumley <lumleyshawn3@gmail.com>
Sent: Thursday, February 27, 2025 2:15 PM
To: Candice Seymour <cseymour@citystaug.com>
Subject: Re: BP2025-0116 - 27 Grove Avenue

Caution: This email originated from outside of the organization. Do not click links, open attachments or respond unless you recognize the sender and know the content is safe. When in doubt, contact IT.

Yes it shows the light pattern on the side of every window.

On Thu, Feb 27, 2025, 2:14 PM Candice Seymour <cseymour@citystaug.com> wrote:

Do the stickers show the lite patterns? It's not a very clear photo. I really need to see what the glass looks like.

Candice Seymour

Historic Preservation Planner

City of St. Augustine

cseymour@citystaug.com

904-209-4326

Please Note: Florida has a very broad Public Records Law. Unless specifically exempt by state law, written communications to city officials or staff regarding official city business are public records available to the public and media upon request. If your email communication is related to official government business, it may therefore be subject to public disclosure.

From: Shawn Lumley <lumleyshawn3@gmail.com>
Sent: Thursday, February 27, 2025 2:12 PM
To: Candice Seymour <cseymour@citystaug.com>
Subject: Re: BP2025-0116 - 27 Grove Avenue

Caution: This email originated from outside of the organization. Do not click links, open attachments or respond unless you recognize the sender and know the content is safe. When in doubt, contact IT.

Let me know if this works.

On Thu, Feb 27, 2025, 2:06 PM Shawn Lumley <lumleyshawn3@gmail.com> wrote:

Gotcha! Give me a few and I'll get you a photo.

On Thu, Feb 27, 2025, 2:05 PM Candice Seymour <cseymour@citystaug.com> wrote:

The existing windows are 2/2 lite pattern (see photo below), and I am trying to confirm that the replacement windows are as well. The documentation does not indicate a lite pattern. I can swing by and verify if the windows are already on site. Or you or the homeowner can send a photo of the replacement windows? Even the order sheet with the divided lites indicated would be acceptable. I just need documentation to approve the work.

Thank you!

Candice Seymour

Historic Preservation Planner

City of St. Augustine

cseymour@citystaug.com

904-209-4326

Please Note: Florida has a very broad Public Records Law. Unless specifically exempt by state law, written communications to city officials or staff regarding official city business are public records available to the public and media upon request. If your email communication is related to official government business, it may therefore be subject to public disclosure.

From: Shawn Lumley <lumleyshawn3@gmail.com>
Sent: Thursday, February 27, 2025 1:40 PM
To: Candice Seymour <cseymour@citystaug.com>
Subject: Re: BP2025-0116 - 27 Grove Avenue

Caution: This email originated from outside of the organization. Do not click links, open attachments or respond unless you recognize the sender and know the content is safe. When in doubt, contact IT.

The windows were purchased by the homeowner. I have attached all the information provided to me by the owner. What other information do you need? The windows are onsight. Please advise.

On Thu, Feb 27, 2025, 1:36 PM Candice Seymour <cseymour@citystaug.com> wrote:

Good afternoon,

Can the design for the replacement windows be confirmed? I see they are the wood Kolbe Heritage series, but I can only administratively approve with confirmation that they will be 2/2 with exterior (raised) divided lites to match the existing 2nd story windows.

Thank you!

Candice Seymour

Historic Preservation Planner

City of St. Augustine

cseymour@citystaug.com

904-209-4326

Please Note: Florida has a very broad Public Records Law. Unless specifically exempt by state law, written communications to city officials or staff regarding official city business are public records available to the public and media upon request. If your email communication is related to official government business, it may therefore be subject to public disclosure.

CITY OF ST. AUGUSTINE
HISTORIC ARCHITECTURAL REVIEW BOARD APPLICATION

Certificate of Appropriateness

Case Number: HP2025-0083 **Meeting Date: Thursday, January 15, 2026**

1. NAME OF APPLICANT: Shawn Lumley
   Business (if applicable):
   Address: 1697 Castile St
   City: SAINT AUGUSTINE State: FL Zip Code: 32080
   Daytime Telephone: Available Upon Request E-Mail Address: Available Upon Request

2. NAME OF PROPERTY OWNER: Ivan Topalov
   Business (if applicable):
   Address: 27 Grove Ave
   City: Saint Augustine State: Fl Zip Code: 32084
   Daytime Telephone: Available Upon Request E-Mail Address: Available Upon Request

3. PROJECT LOCATION: 27 GROVE AVE, Saint Augustine, FL, 32084

4. LEGAL DESCRIPTION: KINGSLAND ADDN CITY N1/2 OF LOT 13 OR5984/369

5. SCOPE OF WORK: for after-the-fact-replacement of original wood windows with new wood windows of a different design.

Information attached by applicant includes:

- Application Agreement
- Existing Photograph
- Details Submitted for Permit
  (Included in application by staff)

Received December 15, 2025
Planning and Building Dept.

HARB APPLICATION AGREEMENT

In filling out this application:

- **I understand that it becomes part of the Public Record of the City of St. Augustine and hereby certify that all information contained herein is accurate to the best of my knowledge.**
- **I further understand that if this application is for an *Opinion of Appropriateness*, I must still obtain a *Certificate of Appropriateness* before applicable permits can be issued for project work to begin. If this application is for a *Certificate of Appropriateness, Demolition*, or *Partial Demolition*, and it is approved, I am required to obtain other development approvals, archaeological review, and a building permit as necessary prior to starting project work.**
- **Once a hearing date has been set and a legal notice has been published or posted, I, or an authorized representative, must be prepared to present the request at the scheduled hearing date. The cost of subsequent hearings requiring re-noticing due to continuance will be assessed to the applicant.**
- **I have been made aware that applications must be sufficiently complete at the time of submittal or may be delayed to a future meeting. Relevant information necessary for application review shall include but not be limited to the items referenced in the "Plan Requirements" section of the Architectural Guidelines for Historic Preservation (AGHP) depending on the scope and scale of the project. The minimum application requirements are marked as required submittal documents in this online application. Contact Planning Staff if the project is unique and needs to be addressed in a different manner. Minor details may be submitted in the portal up to 10 days before the meeting and HARB will determine if additional materials may be presented at the meeting.**

All applicants/owners of record must sign the application agreement. If the property applicant/owner is a governmental agency; licensed business or company; incorporated organization; or an administered estate, an authorized agent may sign. If the applicant is different than the property owner, the application must be signed by both parties. An Authorization Form signed by the property owner(s) and notarized, must be submitted only in the absence of the property owner's signature or where an authorized agent signs in lieu of the property owner.

Project Address: 27 Grove Ave, Saint Augustine

Applicant's Name: Anthony Lumley Applicant's Signature: [signature]

Owner's Name: Ivan Jogalov Owner's Signature: [signature]

Owner's Name: _____ Owner's Signature: _____

Owner's Name: _____ Owner's Signature: _____

(Can add additional signature page if needed)

Florida Statute 286.0105 states that a person appealing any decision by this board at any meeting regarding this application may need a verbatim record of the proceedings which includes testimony and evidence upon which the appeal is to be based.

Candice Seymour

From: Candice Seymour
Sent: Tuesday, December 23, 2025 10:40 AM
To: Shawn Lumley
Cc: ivantopalov@outlook.com
Subject: 27 Grove Avenue - Certificate of Appropriateness application for the January 15, 2026 Historic Architectural Review Board Meeting
Attachments: Owner auth 2019.pdf

RE: 27 Grove Avenue

Greetings!

This email formally acknowledges receipt of your Certificate of Appropriateness (COA) application to appear before the Historic Architectural Review Board (HARB). **The meeting is currently scheduled on January 15, 2026 as an in-person meeting beginning at 1 pm in the Alcazar Room of City Hall (75 King Street).** Please read this e-mail thoroughly. Below are the next steps for your application:

- The total cost of your application fee is $50 and must be paid ASAP for your application to be included on the meeting agenda. Application fees and any subsequent costs related to your application can be paid by:
  - Utilizing the Online Portal payment system (a convenience fee applies)
  - Mailing a check made out to the City of St. Augustine to ATTN: Planning and Building Department, P.O. Box 210, St. Augustine, FL 32085 (include property address and application type in check memo or on a cover page)
  - Visting In-person at 75 King Street, Elevator Lobby "B," 4th floor with cash, check, or card (2% fee is applied to all card transactions)
- **Avoid Scams: The City of St. Augustine clearly posts all application fees for HARB on our website. Additional fees for advertising are provided by the St. Augustine Record and/or based on the number of certified notices as required per City Ordinance and State Statute. Invoices will always be sent via a citystaug.com email address. The City of St. Augustine will never request that fees be wire transferred. If there is any question as to whether an invoice you receive is legitimate, check the online portal or call 904-209-4326 to confirm. For more information, please read our scam alert.

- Our staff will need to photograph the property to supplement the item staff report. **Please confirm receipt of this email and let us know a convenient time within the next 5 business days to conduct a site visit.** If the presence of a property owner/applicant is not necessary for the site visit, you may also grant staff permission to access the property independently for photographs. We will only need exterior photographs.

- A preliminary review of your application (utilizing the checklist attached to your application form) was completed by staff and the following items are still required to complete your application:
  - The Window detail documents submitted with the building permit
  - A floor plan of each floor noting which windows were replaced with corresponding exterior photographs
  - A corresponding numbered window schedule of existing windows.
  - Justification for the change

  Formal staff evaluation of the proposed project may uncover further required materials and/or include conditions associated with the staff recommendation. **Any updates, or additional and supporting materials for this Certificate of Appropriateness application must be uploaded in PDF format to your application in the Planning**

and Building Portal. Additional materials will be accepted in the Planning and Building Department **up to 10 days before the meeting and must be received January 5, 2026** per Ordinance 2010-09. After that, the HARB has the discretion whether to consider any additional materials presented at the meeting and your application may be continued if the HARB deems the application incomplete. The HARB may also request additional information during the public hearing.

- **A copy of the meeting agenda and the staff report for this application will be emailed to you at the address provided on the application by the week of the meeting. If you do not receive it before the meeting date, please contact our department.**

- Because of the quasi-judicial nature of HARB hearings, someone must physically be at the meeting to represent the application. If the representative is not listed on the application as the applicant or property owner, an Owner's Authorization Form (attached) must be completed granting the other person/people the ability to represent the application. The form requires the property owner's signature and **must** be notarized.

IMPORTANT NOTICE: Now that the hearing date has been set and once the legal notice has been published or posted, the applicant must be prepared to present the request at the scheduled hearing date. If the applicant requests a continuance, the decision to grant or deny the request for continuance will be decided by a vote of the board at the scheduled hearing date. The applicant, or a duly authorized representative with authority to bind, should be present at the scheduled hearing date to answer questions from the board regarding the application. If the board votes to deny the request for a continuance, the hearing on the application will go forward, whether or not the applicant is present, and could result in a denial of the application if the board finds that the application and supporting documents submitted prior to the meeting do not meet the criteria of the code. Costs associated with legal notice will be assessed by the city and must be paid prior to the issuance of any development permit. Costs associated for any subsequent hearings requiring re-notice as a result of the applicant postponing or re-scheduling of any hearing will also be assessed to the applicant.

Candice Seymour
Historic Preservation Planner
City of St. Augustine
cseymour@citystaug.com
904-209-4326

Please Note: Florida has a very broad Public Records Law. Unless specifically exempt by state law, written communications to city officials or staff regarding official city business are public records available to the public and media upon request. If your email communication is related to official government business, it may therefore be subject to public disclosure.

Received December 15, 2025
Planning and Building Dept.

Materials Submitted 02/21/2025 for Permit
Added by Staff

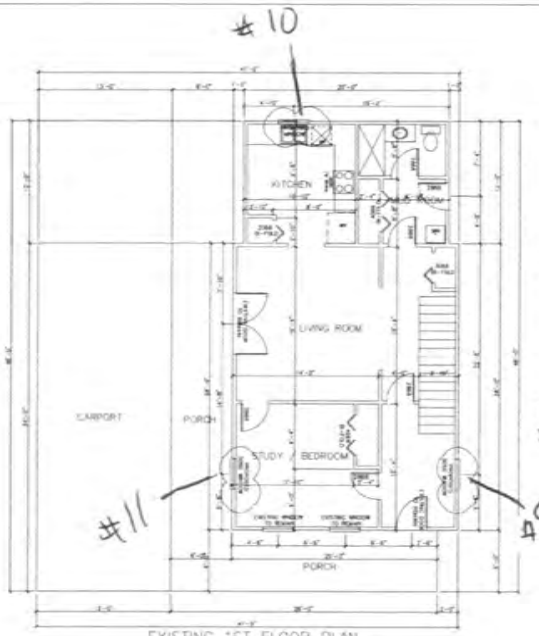

EXISTING 1ST FLOOR PLAN

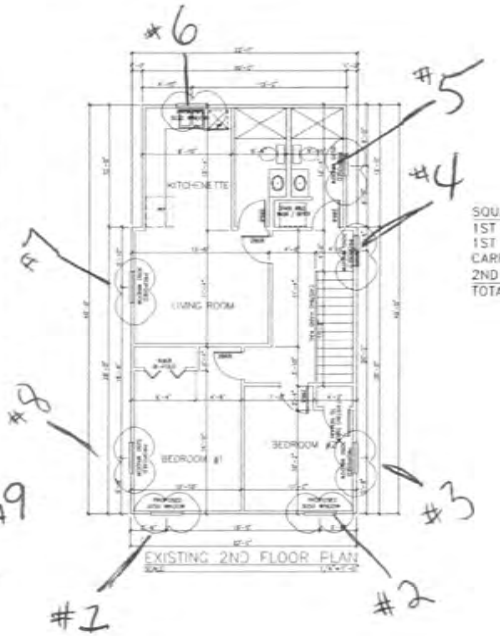

EXISTING 2ND FLOOR PLAN

SQUARE FOOTAGE TABULATION

1ST FLOOR LIVING	856
1ST FLOOR PORCH	324
CARPORT	442
2ND FLOOR LIVING	856
TOTAL	2,478

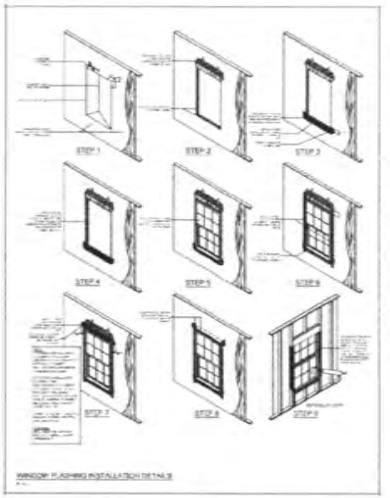

WINDOW FLASHING INSTALLATION DETAILS

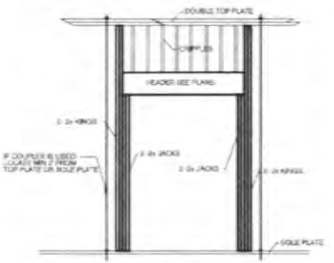

TYPICAL DOOR/WINDOW OPENING

WINDOW/DOOR HEADER SCHEDULE

DESIGN LOADS

CODE REFERENCE. ALL FOLLOWING CODE REFERENCE ARE APPLIED TO THIS DRAWINGS

NEW WINDOWS PLAN FOR
27 GROVE AVE
ST. JOHNS COUNTY

DRAWN BY K.E.B.
DATE 2-10-25
SCALE
CHECKED BY R.J.M.
PLAN NO.
SHEET NO. 1 OF 2

Materials Submitted 02/21/2025 for Permit
Added by Staff

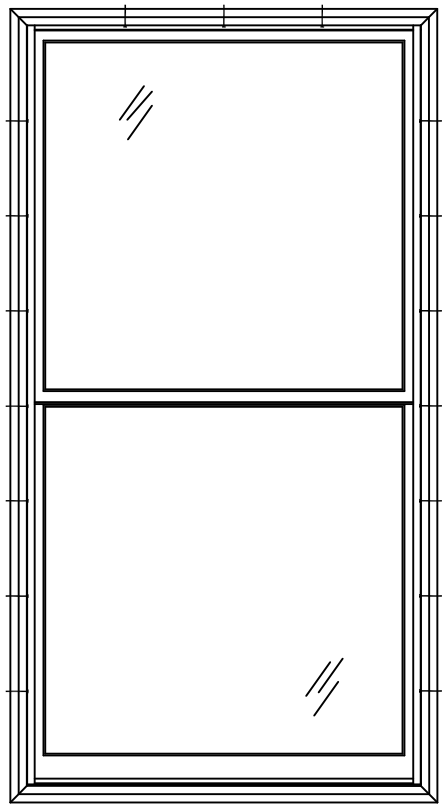

EXTERIOR ELEVATION

MAX. FRAME SIZE (IN.)	IMPACT
50-13/16" x 98-3/64"	NO
APPLICABLE FOR SINGLE UNITS ONLY	

FRAME ANCHOR REQUIREMENTS TABLE

FRAME/CLIP TO OPENING FASTENER TYPE	MINIMUM EMBED	MINIMUM EDGE DIST.
#10 PFH screws into frame and wood substrate	——	——
#8 PFH Zinc treated screws into clip and wood substrate at an angle	1-1/2"	——
#8 PFH Zinc treated screws into clip and frame	FULL	See pg. 2

Installation Method

Installation Clips	Screws thru the Frame
Sides = 12-1/4" from corners & on center Head = 12-11/16" from corners & on center Sill = None	N/A

GENERAL NOTES

1. These units have been tested, analyzed, Hallmark certified, and FBC approved.
2. Bucking, openings, and bucking fasteners must be properly designed and installed to transfer wind loads to the structure. The unit was tested with 1/2" rough opening gap.
3. These units were tested with ponderosa pine bucks, Florida building code requires preservative treated southern pine bucks.
4. All hardware and fasteners shall be in accordance with these drawings and may not vary unless specifically mentioned on the drawings.
5. These units have been tested in accordance with and meet the requirements of the Florida Building Code.
6. Impact shutters are required only with non-impact units.
7. All anchors shall be installed as specified on these drawings. Specified embedment base material shall be beyond wall finish or stucco.
8. Testing of one wood species covers all other species with an equal or higher modulus of elasticity and modulus of rupture.
9. Testing of primed covers testing of clad as long as cladding is not structural (extruded), or wraps around the gasket.
10. Testing of windows and doors with a given width and thickness of solid stiles and rails, covers products with wider and thicker solid stiles and rails provided that construction details are consistent.
11. Any fixed geometric shape that fits within the tested/approved size for a particular product type is qualified by the rectangular shape provided that the frame, sash, panels, components, and construction remain the same.
12. All fixed shaped units must fit inscribed into the allowable rectangular units and be governed by allowable design pressure or the respective rectangular unit.
13. Shims need to be located a maximum of 4" from each corner and a maximum of 4" from each anchor location.
14. Plywood was used during testing to simulate the finished exterior of the structure. Actual finished exteriors will vary.

KOLBE WINDOWS & DOORS
1323 South 11th Ave.
Wausau, WI 54401
715-842-5666

Heritage Series
Old World Classic

FL# 10398	R&D No. 13199
Revision	Drawn By: JRK
A	Date: 3/22/18
B	Sheet: 1 of 2
C	Drawing No. 13199

Materials Submitted 02/21/2025 for Permit
Added by Staff

Installation Clip Installation

HEAD

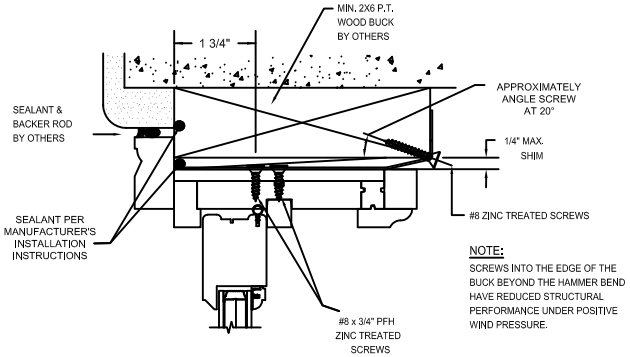

NOTE:
SCREWS INTO THE EDGE OF THE BUCK BEYOND THE HAMMER BEND HAVE REDUCED STRUCTURAL PERFORMANCE UNDER POSITIVE WIND PRESSURE.

EXTERIOR

SIDE JAMB

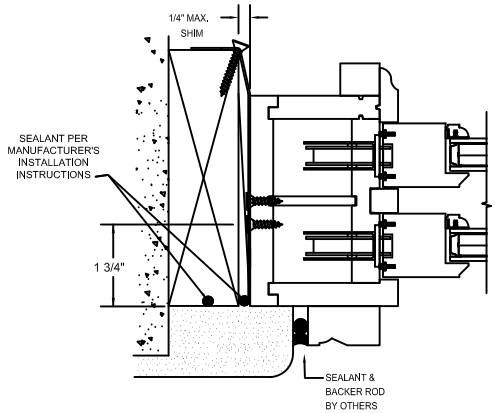

EXTERIOR

SILL

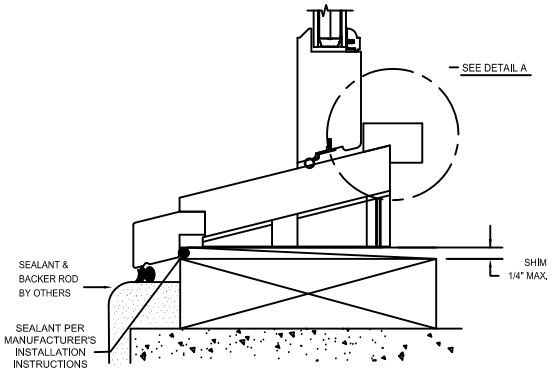

DETAIL A

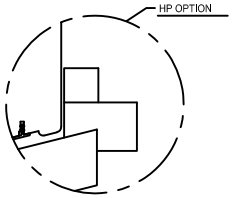

GENERAL NOTES

1. These units have been tested, analyzed, Hallmark certified, and FBC approved.
2. Bucking, openings, and bucking fasteners must be properly designed and installed to transfer wind loads to the structure. The unit was tested with 1/2" rough opening gap.
3. These units were tested with ponderosa pine bucks, Florida building code requires preservative treated southern pine bucks.
4. All hardware and fasteners shall be in accordance with these drawings and may not vary unless specifically mentioned on the drawings.
5. These units have been tested in accordance with and meet the requirements of the Florida Building Code.
6. Impact shutters are required only with non-impact units.
7. All anchors shall be installed as specified on these drawings. Specified embedment base material shall be beyond wall finish or stucco.
8. Testing of one wood species covers all other species with an equal or higher modulus of elasticity and modulus of rupture.
9. Testing of primed covers testing of clad as long as cladding is not structural (extruded), or wraps around the gasket.
10. Testing of windows and doors with a given width and thickness of solid stiles and rails, covers products with wider and thicker solid stiles and rails provided that construction details are consistent.
11. Any fixed geometric shape that fits within the tested/approved size for a particular product type is qualified by the rectangular shape provided that the frame, sash, panels, components, and construction remain the same.
12. All fixed shaped units must fit inscribed into the allowable rectangular units and be governed by allowable design pressure or the respective rectangular unit.
13. Shims need to be located a maximum of 4" from each corner and a maximum of 4" from each anchor location.
14. Plywood was used during testing to simulate the finished exterior of the structure. Actual finished exteriors will vary.

KOLBE WINDOWS & DOORS
1323 South 11th Ave.
Wausau, WI 54401
715-842-5666

Heritage Series
Old World Classic

FL# 10398	R&D No. 13199
Revision	Drawn By: JRK
A	Date: 03/21/18
B	Sheet: 2 of 2
C	Drawing No. 13199A

Application Pg 8

Materials Submitted 02/21/2025 for Permit
Added by Staff

Materials Submitted 02/21/2025 for Permit
Added by Staff

Materials Submitted 02/21/2025 for Permit
Added by Staff

Materials Submitted 02/21/2025 for Permit
Added by Staff

Materials Submitted 02/21/2025 for Permit
Added by Staff

Materials Submitted 02/21/2025 for Permit
Added by Staff

CITY OF ST. AUGUSTINE HISTORIC ARCHITECTURAL REVIEW BOARD

STAFF REPORT AND RECOMMENDATION

Prepared for January 15, 2026 Meeting

Application HP2025-0084 Address: 500 Anastasia Boulevard

Gulfstream Design Group, LLC – Applicant City of St. Augustine – Owner

Project description: To demolish a commercial building, constructed c. 1971, that is recorded in the Florida Master Site File and not located in a district.

Architectural Style:	Masonry Vernacular	Florida Master Site File:	SJ08234
National Register:	N/A	Construction date:	1971
Archaeology Zone:	N/A	Zoning District:	GU
Parcel number:	2185700000		
Agenda Item:	7(a)	Previous Action(s):	N/A

STAFF SUMMARY AND ANALYSIS:

This Masonry Vernacular contemporary commercial structure is located on the northeast corner of Anastasia Boulevard and Moultrie Place on a lot that also fronts Comares Avenue to the northeast. The building features a flat roof, stucco exterior, commercial storefront entry, brick planters under each of the eights (8) vertical windows flanking the front entry, and a covered drive-through on the rear. The building exterior was redone around 2009. Prior to renovation, the structure featured an asphalt shingle mansard roof with semi-hexagonal hoods accenting each vertical window.

The applicant is seeking full demolition of the structure to allow for construction of a new City fire station and public use facility.

Detailed analysis and additional comments can be found in the staff responses to the Demolition Review Criteria on page 3 of this staff report. Any full demolition of a structure aged 50 years or older requires review and approval by the HARB.

STAFF DOES NOT GENERALLY PROVIDE RECOMMENDATIONS FOR CITY PROJECTS. THE HARB MUST MAKE A DETERMINATION BASED UPON THE INFORMATION PROVIDED.

SUMMARY SCOPE OF WORK:

1. Demolition of a commercial building.

DEMOLITION REVIEW CRITERIA (AGHP):

1. Whether or not the structure is within or is immediately facing a locally designated historic preservation zoning district. N/A

2. Whether or not the structure is listed in the National Register either individually or contributing to a National Register Historic District. While this building is not located within a historic district, it is within the Anastasia Boulevard Entry Corridor.

3. The contribution of the structure to the mass and scale of the streetscape. The building has a similar mass and scale to other commercial structures along the corridor.

4. The impact of the loss of the structure on the streetscape. The building does not have a unique typology for the commercial corridor and is more contemporary in style than some older commercial structures along the streetscape that exhibit more Mid-Century architectural elements.

5. Whether or not the structure will be replaced and the impact of a replacement structure, or lack thereof, on the streetscape. A design for the proposed new fire station has been reviewed and approved by the Corridor Review Committee based upon the requirements of the Anastasia Boulevard Design Standards for Entry Corridors. The new structure will feature Mid-Century architectural elements more consistent with architecture existing along the streetscape.

6. The historical or cultural merit of the structure. The building is recorded in the Florida Master Site File but is not located in a district. No historic or cultural associations are known that would qualify the building for listing individually and the 2025 Florida Master Site File update indicates that the structure would not contribute to a district.

7. The impact of the loss of the structure on the historical or cultural integrity of the city, district and neighborhood. The building is not designated as historic and is not eligible for individual designation or to be considered contributing to a historic district if one were extant, according to a 2025 architectural survey of recent past structures.

8. Whether or not the structure is representative of a style or type of architecture or a method of construction. The building is an example of the simple, contemporary, masonry commercial architecture that has been altered over time.

9. ***Whether or not the structure is one of the last surviving examples of its style or type of architecture or a method of construction.*** The building typology is commonly found throughout St. Augustine's commercial corridors.

10. ***Whether or not the structure is of such design, craftsmanship or materials that it either could not be reproduced, or could be reproduced only with great difficulty or expense. The condition of the structure, and the possibility of rehabilitating or relocating the structure.*** The masonry building does not have a unique architectural style or characteristics that would be difficult to reproduce but new construction will be significantly different in appearance.

11. ***The justification for the proposed demolition.*** This structure is proposed for demolition to prepare the site for construction of a new City fire station and public use facility that will replace the existing "Island Station" at the northeast corner of Anastasia Boulevard and Red Cox Drive.

APPLICATION REQUIREMENTS, ELIGIBILITY FOR DEMOLITION REVIEW, CONDITIONS FOR DEMOLITION APPROVAL:

Eligibility for Demolition Review (Section 28-87(3), CoSA Code of Ordinances)

The review of all applications for demolition or partial demolition permits for historic or regulated structures. Also, review all applications for demolition or partial demolition permits for primary structures within historic preservation zoning districts and National Register districts for potential designation as an historic landmark, and review of partial demolition permits for regulated structures not eligible for administrative approval. Privately owned single-family residential structures that qualify for complete demolition by statute and are not otherwise exempt pursuant to F.S. ch. 553.79(25), will be processed consistent with state law.

National Register Status (Section 28-89(7), CoSA Code of Ordinances)

Applications for certificate of demolition of a building or structure that is of exceptional significance including a local historic landmark, has been a contributing property to a National Register of Historic Places District or has been individually listed on the National Register of Historic Places shall require the following with the burden of proof to be on the applicant. The board may also require the following of structures considered to be contributing to the historical character of the city: 1) requiring submittal of a condition assessment report performed by a qualified professional; 2) requiring the applicant to prove "undue economic hardship" to justify demolition; and 3) allowing HARB the option to deny the demolition request if an undue economic hardship is not proven and removal of the building or structure will be detrimental to the historic and architectural character of the city.

Local Landmark Designation (Section 28-87(3) & (10), CoSA Code of Ordinances)

HARB is assigned the authority of reviewing all applications for demolition or partial demolition permits for historic or regulated structures. Also, review all applications for demolition or partial demolition permits for primary structures within historic preservation zoning districts and National Register districts for potential designation as an historic landmark"… for potential designation as an historical landmark. "Local historic landmarks" are defined as a building, object, site or structure of the highest historical, architectural, cultural or archaeological importance and whose demolition, removal, relocation, or alteration would constitute an irreplaceable loss to the character and quality of the city.

Conditions for Demolition Approval (Section 28-89(6), CoSA Code of Ordinances)

HARB has the discretion in its review of an application for Certificate of Demolition to require, as conditions for approval, one or more of the following:

- Architectural Salvage **-** *As a condition of issuing a certificate of demolition, the board may require, at the applicant's expense, salvage and preservation of significant building materials, architectural details and ornaments, fixtures, and the like for reuse in restoration of other historic properties.*
- Archival Documentation - *The board may also require at the applicant's expense the recording of the structure for archival purposes prior to demolition. The recording may include, but shall not be limited to, photographs and measured drawings.*

~~~~~~~~~~~~~~~~~

The building was built by 1971 and is thus more than 50 years old. The building is not in a Historic Preservation Zoning District or National Register Historic District or individually listed on the National Register of Historic Places but is recorded on the Florida Master Site File.

The requirements for review have been sufficiently met.
~~~~~~~~~~~~~~~~~

Additional References for Demolition Review From City Code:

Sec 28-89(3) (as revised in 2024): In the case of the proposed demolition of an existing historic structure, or a project that constitutes partial demolition of a historic structure that the removal of such structure or architectural features will not be detrimental to the historic and architectural character of the city or that, balancing the interest of the city in preserving the integrity of the city and interest of the owner of the property.

a. Approval of the plans for demolition in the latter event the board may issue an order postponing demolition for a period of not to exceed twelve (12) months after which the owner must reapply. The board may issue a second postponement with the total postponement period not to exceed two (2) twelve-month periods. If the board concludes that the demolition should be postponed, it shall, before issuing any final order with respect to such postponement, afford the applicant an opportunity to appear before the board to offer any evidence they may desire to present concerning the proposed order. Within the period of postponement, the board shall ascertain what the city or other agency or organization may do to preserve such structure and shall make recommendations to that effect to the city commission or otherwise cause the structure to be preserved. This section shall not apply to any permit for demolition which has been applied for, in proper form, prior to the effective date of this section.
b. If the building or structure is of exceptional significance including a local historic landmark, is a contributing property to a National Register of Historic Places District or has been individually listed on the National Register of Historic Places, the board can deny the demolition if the board finds the removal of such building or structure will be detrimental to the historic and architectural character of the city and the applicant has not proven the denial will cause an undue economic hardship.

Sec 28-87(10) under (HARB) Responsibilities:
Designate historic landmarks. As utilized herein the term "local historic landmark" shall mean a building, object, site, or structure of the highest historical, architectural, *cultural, or archaeological importance and whose demolition, removal, relocation, or alteration would constitute an irreplaceable loss to the character and quality of the city. In the event the historic architectural review board desires not to issue a demolition or partial demolition permit for a structure that it finds could meet the criteria for a historic landmark*, the historic architectural review board shall initiate proceedings for designation of the structure as a historic landmark. *In the designation of a historic landmark,* the historic architectural review board shall evaluate the subject property using criteria and standards established by the National Register of Historical Places for national landmarks, or if evaluating the structure as a potential local historic landmark substituting the importance of the resource to the city and state rather than the nation as a whole. No property shall be designated as a historic landmark without first providing the owner of the proposed historic landmark with notice and an opportunity to be heard in the same manner as that provided for a rezoning of property. In addition, consistent with F.S. ch. 553.79(25), a local landmark designation for a privately owned single-family residential structure that qualifies for complete demolition by statute must include the consent of its owner. Any determination of the historic architectural review board shall be subject to appeal by any affected person to the city commission without any fee being charged or levied.

UNREASONABLE OR UNDUE ECONOMIC HARDSHIP:
Defined as an onerous and excessive financial burden that would be placed upon a property owner by the denial of a certificate of demolition or a similar burden which would be placed on a property owner by conditions which the Commission seeks to place on the granting of a certificate. (Section 28-2 CoSA Code of Ordinances)
Is applicant entitled to a Certificate of Demolition independent of any hardship? ☑ Yes ☐ No
Did applicant submit evidence of undue economic hardship? ☐ Yes ☑ No

In any instance where an undue economic hardship, as defined in this chapter, is claimed by a property owner, the property owner may submit to the board any or all of the following information before the board makes a decision on the application for certificate of demolition: (Section 28-89(7)b, CoSA Code of Ordinances)

(Materials submitted by applicant noted with a checked box)

- ☐ 1. An estimate of the cost of the proposed construction, alteration, demolition, or removal;
- ☐ 2. The estimated market value of the property in its current condition; after completion of the proposed construction, alteration, demolition, or removal; and, in the case of a proposed demolition, after renovation of the existing property for continued use;
- ☐ 3. In the case of a proposed demolition, an estimate from an architect, developer, licensed contractor, real estate consultant, appraiser, or other real estate professional experienced in rehabilitation as to the economic feasibility of rehabilitation or reuse of the existing structure on the property;
- ☐ 4. The annual gross income from the property for the previous two (2) years; itemized operating and maintenance expenses for the previous two (2) years; and depreciation deduction and annual cash flow before and after debt service, if any, during the same period;
- ☐ 5. The remaining balance on any mortgage or other financing secured by the property and annual debt service, if any, for the previous two (2) years;
- ☐ 6. All appraisals obtained within the previous two (2) years by the owner or applicant in connection with the purchase, financing, or ownership of the property;
- ☐ 7. Any listing of the property for sale or rent, price asked, and offers received, if any, within the previous two (2) years;
- ☐ 8. The assessed value of the property according to the two (2) most recent assessments;
- ☐ 9. The real estate taxes for the previous two (2) years;
- ☐ 10. The form of ownership or operation of the property, whether an individual, sole proprietorship, for profit or not-for-profit corporation, limited partnership, joint venture, or other;

Any other information considered necessary by the board to a determination as to whether the property does yield or may yield a reasonable return to the property owner. The board may require that the property owner furnish such additional information as the board believes is relevant to the board's determination of any alleged undue economic hardship. No decision of the board shall result in undue economic hardship for the property owner. In any case where undue economic hardship is claimed, the board shall make two (2) specific findings. First, the board shall determine if the owner would be entitled to a certificate of demolition without consideration of undue economic hardship. Second, the board shall determine whether the owner demonstrated an undue economic hardship.

Additional information requested by HARB as per above:

LIST OF ATTACHMENTS:

1. Staff Photographs
2. Florida Master Site File survey
3. Polk City Directory Research

Staff Photographs
500 Anastasia Boulevard

Front (South) Elevation

Staff Photographs
500 Anastasia Boulevard

Front (south) Elevation from Anastasia Boulevard

Staff Photographs
500 Anastasia Boulevard

Southwest Elevation

Staff Photographs
500 Anastasia Boulevard

West Elevation

Staff Photographs
500 Anastasia Boulevard

Southeast Elevation

Staff Photographs
500 Anastasia Boulevard

Northeast Elevation

Staff Photographs
500 Anastasia Boulevard

Building Views - Rear

Staff Photographs
500 Anastasia Boulevard

Rear Elevation

Staff Photographs
500 Anastasia Boulevard

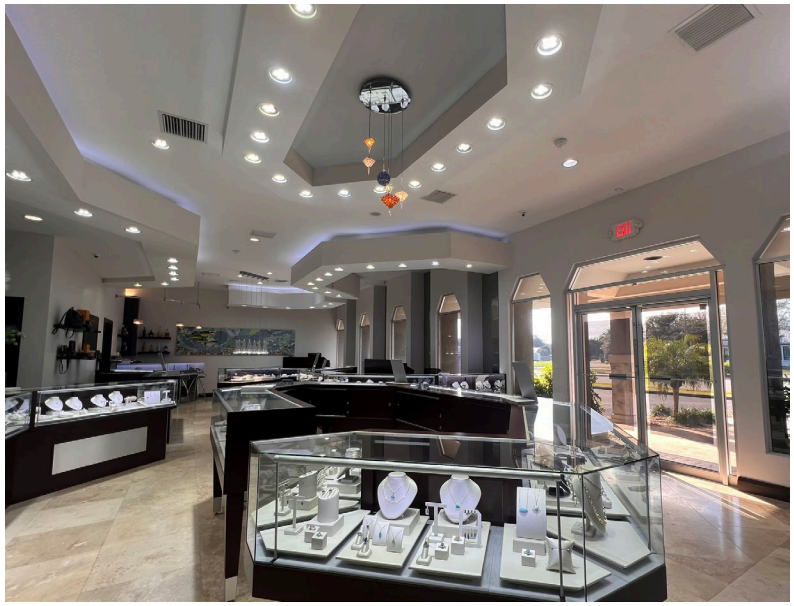

Interior

Staff Photographs
500 Anastasia Boulevard

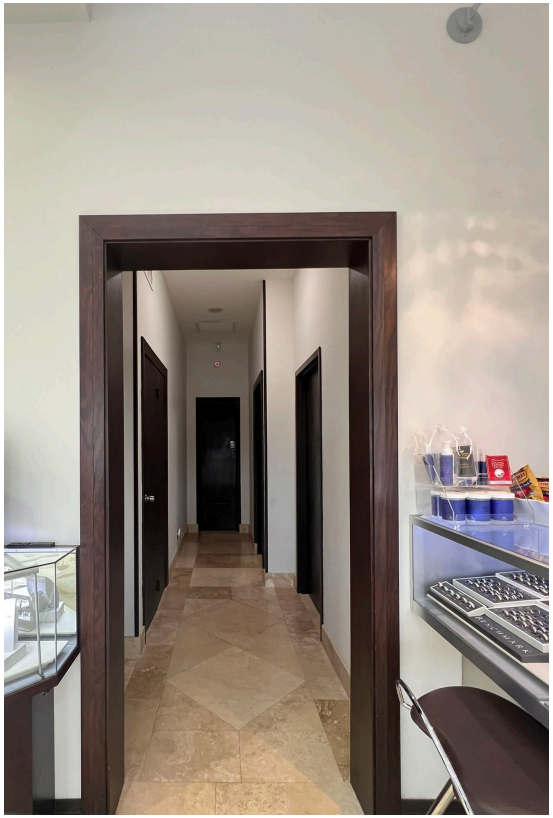

Interior

Staff Photographs
500 Anastasia Boulevard

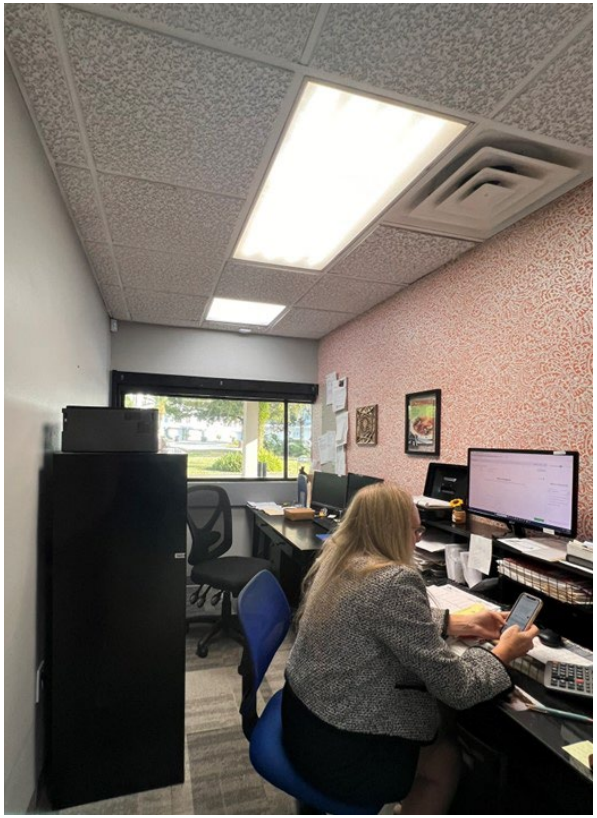

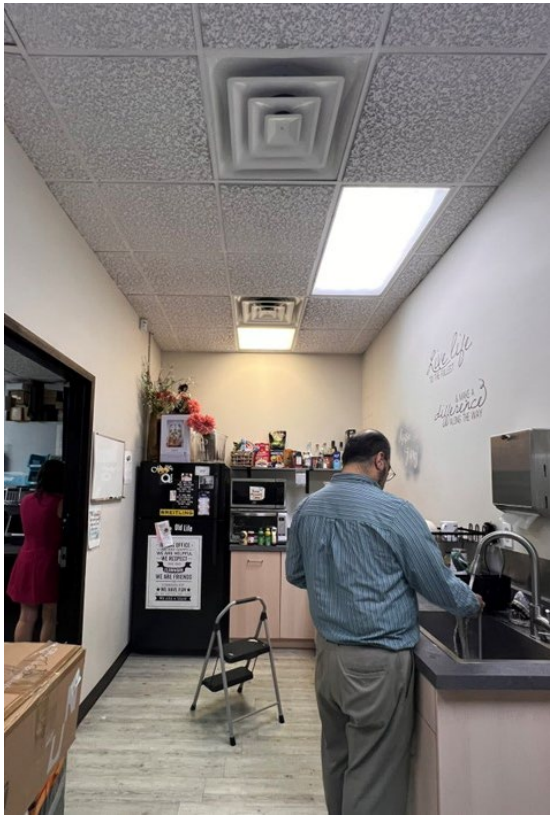

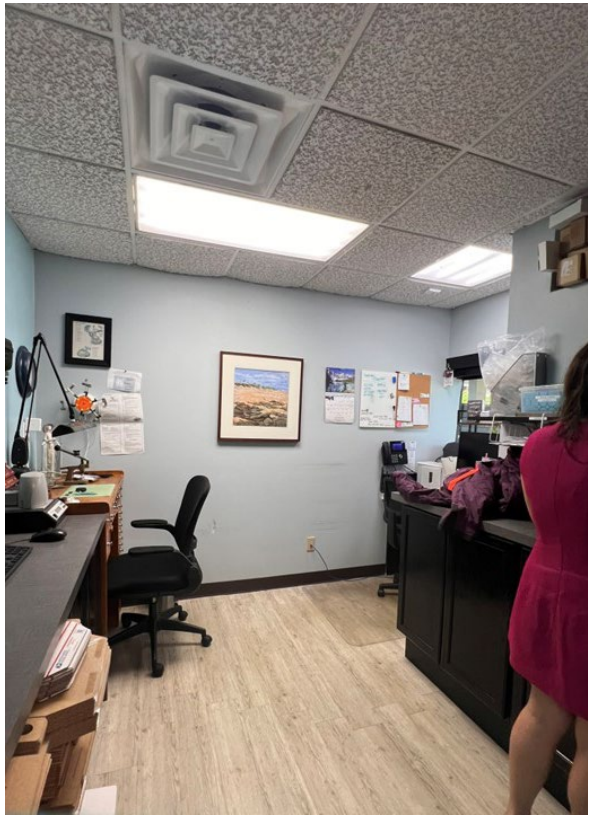

Interior

Staff Photographs
500 Anastasia Boulevard

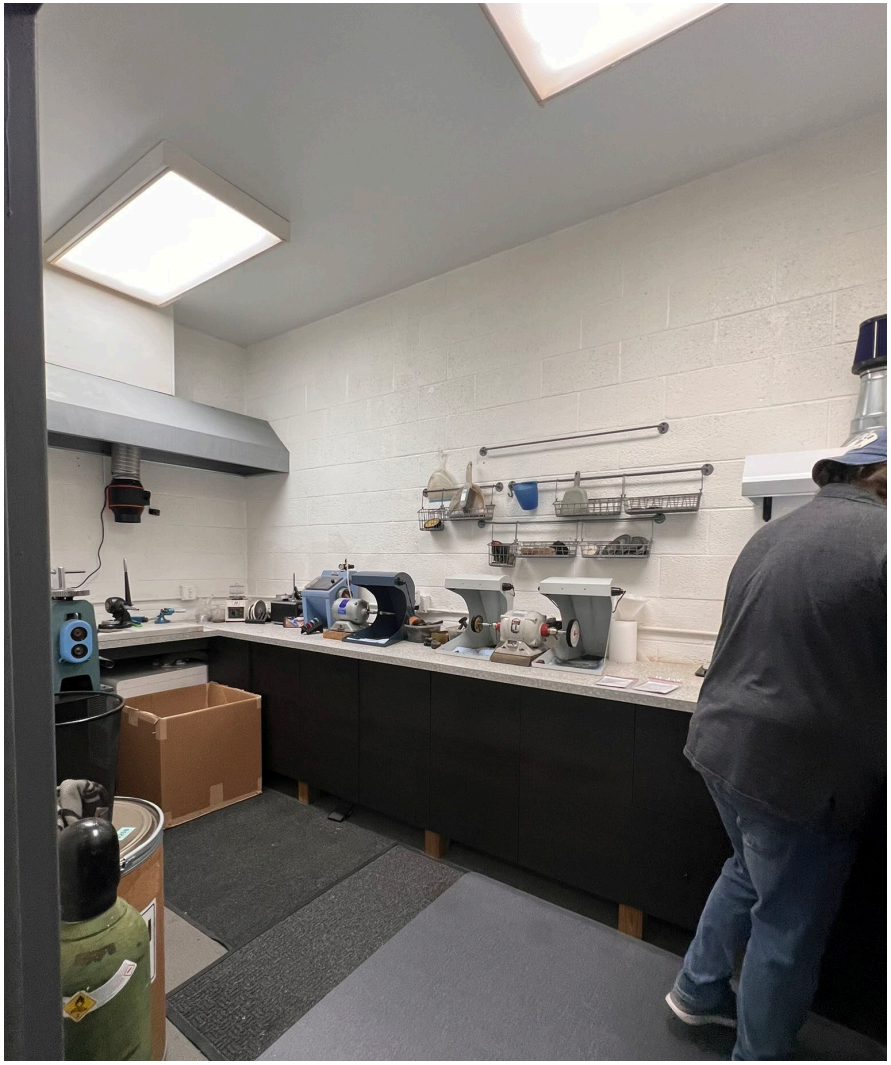

Interior

Staff Photographs
500 Anastasia Boulevard

Google Street View – November 2007 – Front Elevation

Staff Photographs
500 Anastasia Boulevard

Google Street View – November 2007 – Northeast Elevation

Staff Photographs
500 Anastasia Boulevard

Google Street View – November 2007 – West Elevation

Staff Photographs
500 Anastasia Boulevard

Context Photographs – Immediately adjacent properties

☒ Original
☐ Update

HISTORICAL STRUCTURE FORM
FLORIDA MASTER SITE FILE
Version 5.0 3/19

Site#8 SJ08234
Field Date 6-14-2024
Form Date 7-23-2024
Recorder # _____

Shaded Fields represent the minimum acceptable level of documentation.
Consult the *Guide to Historical Structure Forms* for detailed instructions.

Site Name(s) (address if none) 500 Anastasia Boulevard — Multiple Listing (DHR only) _____
Survey Project Name CRAS for SMART St. Augustine PD&E — Survey # (DHR only) _____
National Register Category (please check one) ☒building ☐structure ☐district ☐site ☐object
Ownership: ☒private-profit ☐private-nonprofit ☐private-individual ☐private-nonspecific ☐city ☐county ☐state ☐federal ☐Native American ☐foreign ☐unknown

LOCATION & MAPPING

	Street Number	Direction	Street Name	Street Type	Suffix Direction
Address:	500		Anastasia	Boulevard	

Cross Streets (nearest / between) Moultrie Place/Comares Avenue
USGS 7.5 Map Name ST. AUGUSTINE — USGS Date 2021 — Plat or Other Map _____
City / Town (within 3 miles) St. Augustine — In City Limits? ☒yes ☐no ☐unknown — County St. Johns
Township 7S — Range 30E — Section 16 — ¼ section: ☐NW ☐SW ☐SE ☐NE — Irregular-name: _____
Tax Parcel # 2185700000 — Landgrant _____
Subdivision Name Davis Shores Ocean View — Block 33 — Lot Various
UTM Coordinates: Zone ☐16 ☐17 Easting ☐☐☐☐☐☐ Northing ☐☐☐☐☐☐☐
Other Coordinates: X: _____ Y: _____ Coordinate System & Datum _____
Name of Public Tract (e.g., park) _____

HISTORY

Construction Year: 1971 ☒approximately ☐year listed or earlier ☐year listed or later
Original Use Bank — From (year): 1971 — To (year): 2009
Current Use Store — From (year): 2009 — To (year): 2024
Other Use _____ — From (year): _____ — To (year): _____
Moves: ☐yes ☒no ☐unknown Date: _____ Original address _____
Alterations: ☒yes ☐no ☐unknown Date: 1-1-2009 Nature Removed pitched parapet
Additions: ☒yes ☐no ☐unknown Date: 1-1-1991 Nature North addition
Architect (last name first): _____ Builder (last name first): _____
Ownership History (especially original owner, dates, profession, etc.)

Current Owner: Jabez Enterprises Inc, purchased in 2009

Is the Resource Affected by a Local Preservation Ordinance? ☐yes ☐no ☒unknown Describe _____

DESCRIPTION

Style Masonry Vernacular — Exterior Plan Rectangular — Number of Stories 1
Exterior Fabric(s) 1. Stucco 2. _____ 3. _____
Roof Type(s) 1. Flat 2. _____ 3. _____
Roof Material(s) 1. Built-up 2. _____ 3. _____
Roof secondary strucs. (dormers etc.) 1. _____ 2. _____
Windows (types, materials, etc.)

Fixed, one-light, metal-framed, individual

Distinguishing Architectural Features (exterior or interior ornaments)

Masonry parapet; deep roof overhang; built-in brick planters

Ancillary Features / Outbuildings (record outbuildings, major landscape features; use continuation sheet if needed.)

Landscaping gardens on all corners of exterior; asphalt surrounding building; concrete sidewalk along all exterior walls

DHR USE ONLY	OFFICIAL EVALUATION	DHR USE ONLY
NR List Date _____ ☐Owner Objection	SHPO – Appears to meet criteria for NR listing: ☐yes ☑no ☐insufficient info KEEPER – Determined eligible: ☐yes ☐no NR Criteria for Evaluation: ☐a ☐b ☐c ☐d (see *National Register Bulletin 15*, p. 2)	Date 5/1/25 Init. AMM Date _____

HISTORICAL STRUCTURE FORM

Site #8 SJ08234

DESCRIPTION (continued)

Chimney: No. 0 Chimney Material(s): 1. _____ 2. _____

Structural System(s): 1. Unknown 2. _____ 3. _____

Foundation Type(s): 1. Slab 2. _____

Foundation Material(s): 1. Concrete, Generic 2. _____

Main Entrance (stylistic details)

Double-leaf, aluminum-framed doors with full center lights set on S facade

Porch Descriptions (types, locations, roof types, etc.)

Partial-length, flat roof entry porch supported by square masonry columns attached to the S facade and shelters the main entrance

Condition (overall resource condition): ☐excellent ☒good ☐fair ☐deteriorated ☐ruinous

Narrative Description of Resource

Resource 8SJ08234 is a one-story, Masonry Vernacular style jewelry store with a rectangular plan set at grade on a concrete slab foundation. Built-up materials clad the flat roof and stucco covers the exterior walls.

Archaeological Remains _____ ☐Check if Archaeological Form Completed

RESEARCH METHODS (select all that apply)

☒FMSF record search (sites/surveys)	☒library research	☐building permits	☐Sanborn maps
☐FL State Archives/photo collection	☐city directory	☐occupant/owner interview	☐plat maps
☒property appraiser / tax records	☐newspaper files	☐neighbor interview	☐Public Lands Survey (DEP)
☒cultural resource survey (CRAS)	☐historic photos	☐interior inspection	☐HABS/HAER record search

☒other methods (describe) Pedestrian/Windshield Survey

Bibliographic References (give FMSF manuscript # if relevant, use continuation sheet if needed)

OPINION OF RESOURCE SIGNIFICANCE

Appears to meet the criteria for National Register listing individually? ☐yes ☒no ☐insufficient information

Appears to meet the criteria for National Register listing as part of a district? ☐yes ☒no ☐insufficient information

Explanation of Evaluation (**required**, whether significant or not; use separate sheet if needed)

Due to lack of sufficient historic significance and architectural distinction, 8SJ08234 is ineligible for listing in the NRHP, either individually or as a contributing resource within a potential or existing historic district.

Area(s) of Historical Significance (see *National Register Bulletin 15*, p. 8 for categories: e.g. "architecture", "ethnic heritage", "community planning & development", etc.)

1. _____ 3. _____ 5. _____

2. _____ 4. _____ 6. _____

DOCUMENTATION

Accessible Documentation Not Filed with the Site File - including field notes, analysis notes, photos, plans and other important documents

1) Document type All materials at one location Maintaining organization Southeastern Archaeological Research

Document description Photos, Maps, Field Notes, Aerial File or accession #'s 240058

2) Document type _____ Maintaining organization _____

Document description _____ File or accession #'s _____

RECORDER INFORMATION

Recorder Name London, Brittaney Affiliation Southeastern Archaeological Research

Recorder Contact Information 700 North 9th Ave, Pensacola, FL 32501/brittaney.london@searchinc.com

(address / phone / fax / e-mail)

Required Attachments

❶ **USGS 7.5' MAP WITH STRUCTURE LOCATION CLEARLY INDICATED**

❷ **LARGE SCALE STREET, PLAT OR PARCEL MAP** (available from most property appraiser web sites)

❸ **PHOTO OF MAIN FACADE, DIGITAL IMAGE FILE**

When submitting an image, it must be included in digital AND hard copy format (plain paper grayscale acceptable). Digital image must be at least 1600 x 1200 pixels, 24-bit color, jpeg or tiff.

APE

Newly Recorded Historic Building

Previously Recorded Historic Building

*Indicates NRHP Listing

0 500 Meters

0 1,000 Feet

Esri World Imagery (2023); FMSF (Jul. 2024)

N

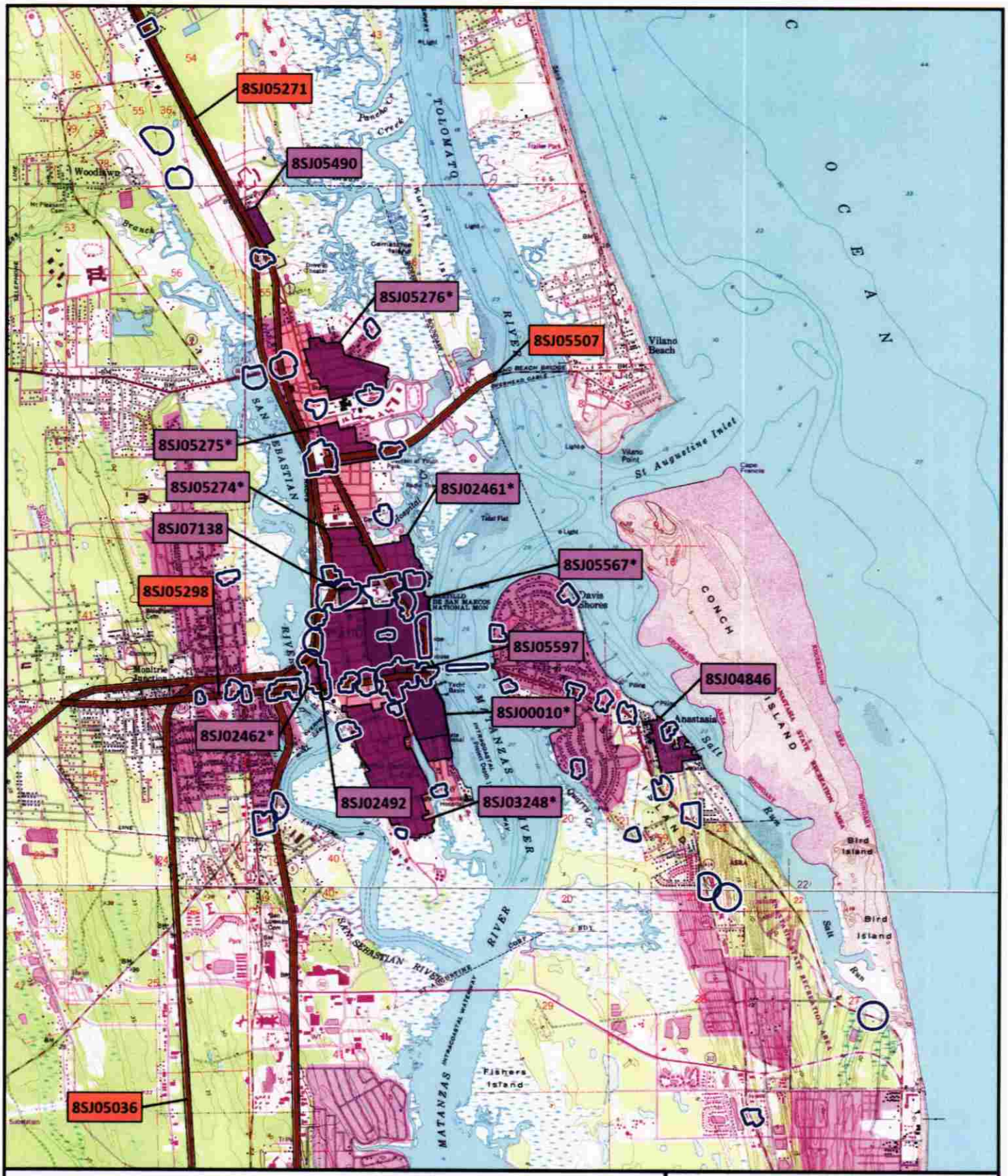

APE

Previously Recorded Historic District

Previously Recorded Linear Resource

*Indicates NRHP Listing

0 1,000 Meters

0 2,000 Feet

USGS 7.5' Quadrangle Maps:
St. Augustine Beach, FL (1988)
and St. Augustine, FL (1988)

N

Clear Form Values

Page 1

☐ Original
☒ Update

HISTORICAL STRUCTURE FORM
FLORIDA MASTER SITE FILE
Version 5.0 3/19

Site#8 SJ08234
Field Date 3-4-2025
Form Date 6-5-2025
Recorder # _____

Shaded Fields represent the minimum acceptable level of documentation.
Consult the *Guide to Historical Structure Forms* for detailed instructions.

Site Name(s) (address if none) 500 Anastasia Boulevard — Multiple Listing (DHR only) _____
Survey Project Name St Augustine Recent Past Architectural Resources — Survey # (DHR only) _____
National Register Category (please check one) ☒building ☐structure ☐district ☐site ☐object
Ownership: ☒private-profit ☐private-nonprofit ☐private-individual ☐private-nonspecific ☐city ☐county ☐state ☐federal ☐Native American ☐foreign ☐unknown

LOCATION & MAPPING
Clear Location Values

	Street Number	Direction	Street Name	Street Type	Suffix Direction
Address:	500		Anastasia	Boulevard	

Cross Streets (nearest / between) Between Comares Avenue and Moultrie Place
USGS 7.5 Map Name ST. AUGUSTINE — USGS Date 2024 — Plat or Other Map _____
City / Town (within 3 miles) St. Augustine — In City Limits? ☒yes ☐no ☐unknown — County St. Johns
Township 7S — Range 30E — Section 16 — ¼ section: ☐NW ☐SW ☐SE ☐NE — Irregular-name: _____
Tax Parcel # 2185700000 — Landgrant _____
Subdivision Name Davis Shores Ocean View — Block _____ — Lot _____
UTM Coordinates: Zone ☐16 ☒17 — Easting 4 7 1 5 4 8 — Northing 3 3 0 6 6 9 3
Other Coordinates: X: -81.294646° — Y: 29.890541° — Coordinate System & Datum latitude/longitude
Name of Public Tract (e.g., park) _____

HISTORY
Clear History Values

Construction Year: 1971 ☐approximately ☐year listed or earlier ☐year listed or later
Original Use Bank — From (year): 1971 — To (year): 2009
Current Use Store — From (year): 2010 — To (year): 2025
Other Use _____ — From (year): _____ — To (year): _____
Moves: ☐yes ☒no ☐unknown — Date: _____ — Original address _____
Alterations: ☒yes ☐no ☐unknown — Date: _____ — Nature Mansard roof covered in 2010
Additions: ☐yes ☒no ☐unknown — Date: _____ — Nature _____
Architect (last name first): _____ — Builder (last name first): _____
Ownership History (especially original owner, dates, profession, etc.)

Originally Barnett Bank. Became Bank of America,closed in 2009. Blue Water Jeweler 2010-2025. Bought by City of St. Aug in 2025 for new fire station.

Is the Resource Affected by a Local Preservation Ordinance? ☐yes ☐no ☐unknown — Describe _____

DESCRIPTION
Clear Description Values

Style Commercial — Exterior Plan L-shaped — Number of Stories 1
Exterior Fabric(s) 1. Stucco — 2. Stone — 3. _____
Roof Type(s) 1. Flat — 2. _____ — 3. _____
Roof Material(s) 1. Built-up — 2. _____ — 3. _____
Roof secondary strucs. (dormers etc.) 1. _____ — 2. _____
Windows (types, materials, etc.)

Fixed metal frame store windows

Distinguishing Architectural Features (exterior or interior ornaments)

Brick planters situated in front of each vertical fixed window (4 bays on either side of entry)

Ancillary Features / Outbuildings (record outbuildings, major landscape features; use continuation sheet if needed.)

Parking lot on all sides of building

DHR USE ONLY	OFFICIAL EVALUATION	DHR USE ONLY
NR List Date _____ ☐Owner Objection	SHPO – Appears to meet criteria for NR listing: ☐yes ☐no ☐insufficient info — Date _____ — Init. _____ KEEPER – Determined eligible: ☐yes ☐no Clear Check Boxes — Date _____ NR Criteria for Evaluation: ☐a ☐b ☐c ☐d (see *National Register Bulletin 15*, p. 2)	

Florida Master Site File / Div. of Historical Resources / R. A. Gray Bldg / 500 S Bronough St., Tallahassee, FL 32399-0250
Phone 850.245.6440 / Fax 850.245.6439 / E-mail SiteFile@dos.myflorida.com

HISTORICAL STRUCTURE FORM

Site #8 SJ08234

DESCRIPTION (continued)

Clear Description Values

Chimney: No. 0 Chimney Material(s): 1. _____ 2. _____

Structural System(s): 1. Concrete block 2. _____ 3. _____

Foundation Type(s): 1. Slab 2. _____

Foundation Material(s): 1. Concrete, Generic 2. _____

Note: you may use the last box in each field to type in an answer that does not appear in the list provided

Main Entrance (stylistic details)

Double steel frame glass doors with pull plates, metal frame fixed side lites and transom

Porch Descriptions (types, locations, roof types, etc.)

Concrete walkway with planters approaching primary entry

Condition (overall resource condition): ☒excellent ☐good ☐fair ☐deteriorated ☐ruinous

Narrative Description of Resource

SJ08234 is a single story commercial building constructed of concrete block in 1971. It originally had Mansard style with semi-hexagonal cutouts above each of its full length fixed windows. These were covered with a new portico in 2010.

Archaeological Remains _____ ☐Check if Archaeological Form Completed

RESEARCH METHODS (select all that apply)

☒FMSF record search (sites/surveys)	☐library research	☐building permits	☐Sanborn maps
☒FL State Archives/photo collection	☐city directory	☐occupant/owner interview	☐plat maps
☒property appraiser / tax records	☒newspaper files	☐neighbor interview	☐Public Lands Survey (DEP)
☒cultural resource survey (CRAS)	☐historic photos	☐interior inspection	☐HABS/HAER record search

☒other methods (describe) aerial photography

Bibliographic References (give FMSF manuscript # if relevant, use continuation sheet if needed)

OPINION OF RESOURCE SIGNIFICANCE

Clear Significance Values

Appears to meet the criteria for National Register listing individually? ☐yes ☒no ☐insufficient information

Appears to meet the criteria for National Register listing as part of a district? ☐yes ☒no ☐insufficient information

Explanation of Evaluation (**required**, whether significant or not; use separate sheet if needed)

Resource is not eligible under Criterion A or B, as no historical associations are known. Resource is not an exemplary or unique presentation of its style and is not eligible under Criterion C.

Area(s) of Historical Significance (see *National Register Bulletin 15*, p. 8 for categories: e.g. "architecture", "ethnic heritage", "community planning & development", etc.)

1. _____ 3. _____ 5. _____

2. _____ 4. _____ 6. _____

DOCUMENTATION

Clear Documentation Values

Accessible Documentation Not Filed with the Site File - including field notes, analysis notes, photos, plans and other important documents

1) Document type All materials at one location Maintaining organization PaleoWest Archaeology

Document description Field Notes File or accession #'s 24-PC-04414

2) Document type _____ Maintaining organization _____

Document description _____ File or accession #'s _____

RECORDER INFORMATION

Recorder Name Emily Ford Affiliation PaleoWest Archaeology

Recorder Contact Information eford@paleowest.com | 916 E Park Ave Tallahassee FL 32301 | 850.296.3669

(address / phone / fax / e-mail)

Required Attachments

❶ **USGS 7.5' MAP WITH STRUCTURE LOCATION CLEARLY INDICATED**

❷ **LARGE SCALE STREET, PLAT OR PARCEL MAP** (available from most property appraiser web sites)

❸ **PHOTO OF MAIN FACADE, DIGITAL IMAGE FILE**

When submitting an image, it must be included in digital AND hard copy format (plain paper grayscale acceptable). Digital image must be at least 1600 x 1200 pixels, 24-bit color, jpeg or tiff.

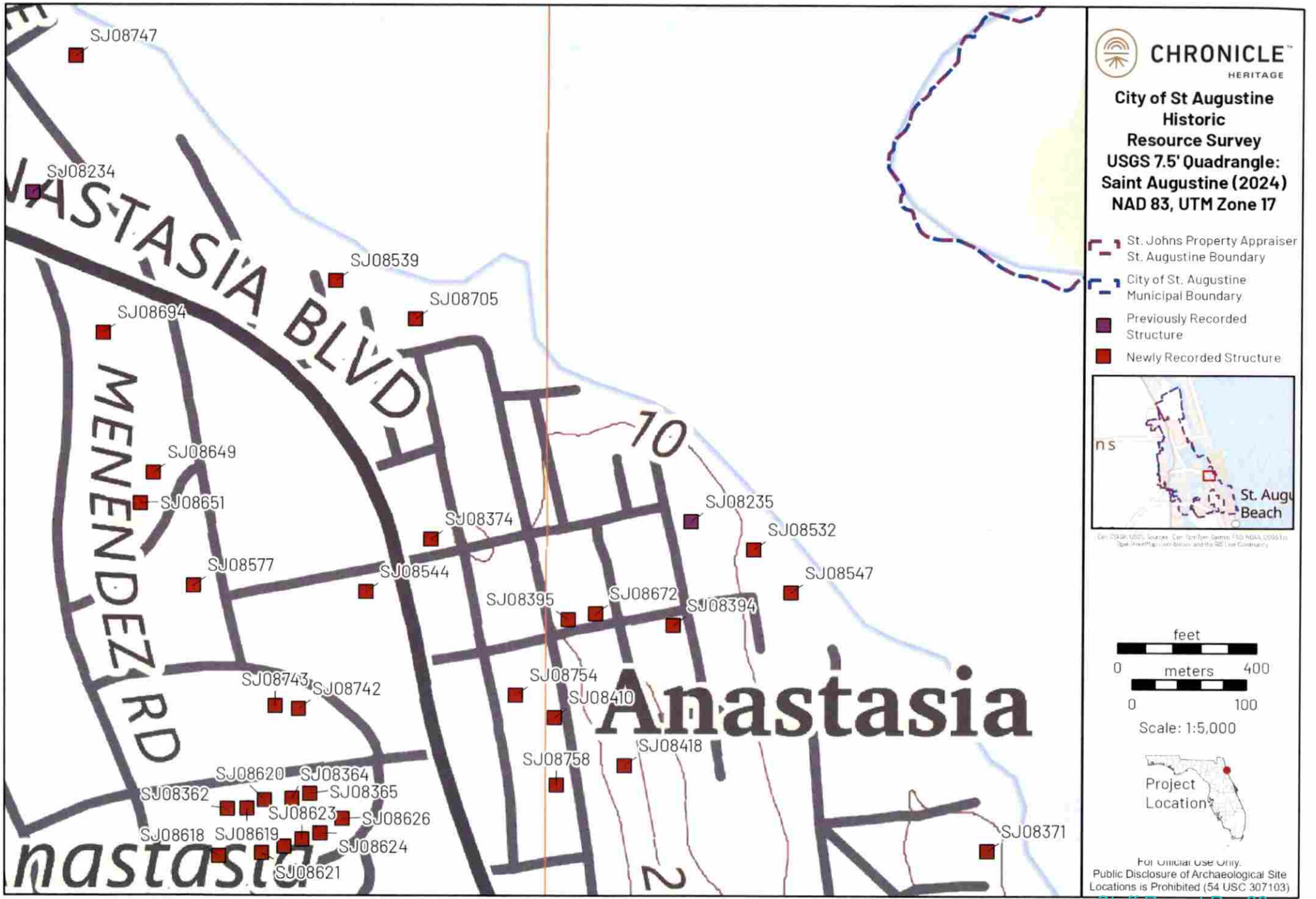
CHRONICLE
HERITAGE
City of St Augustine
Historic
Resource Survey
USGS 7.5' Quadrangle:
Saint Augustine (2024)
NAD 83, UTM Zone 17
St. Johns Property Appraiser St. Augustine Boundary
City of St. Augustine Municipal Boundary
Previously Recorded Structure
Newly Recorded Structure
St. Augu
Beach
feet
0
400
meters
0
100
Scale: 1:5,000
Project Location
For Official Use Only.
Public Disclosure of Archaeological Site Locations is Prohibited (54 USC 307103)
SJ08747
SJ08234
SJ08539
SJ08705
SJ08694
SJ08649
SJ08651
SJ08374
SJ08235
SJ08532
SJ08547
SJ08577
SJ08544
SJ08395
SJ08672
SJ08394
SJ08743
SJ08742
SJ08754
SJ08410
SJ08418
SJ08758
SJ08620
SJ08364
SJ08362
SJ08365
SJ08623
SJ08626
SJ08618
SJ08619
SJ08624
SJ08621
SJ08371
Anastasia
MENENDEZ RD
10
2

CHRONICLE
HERITAGE
City of St Augustine
Historic
Resource Survey
Aerial Imagery
Vivid Maxar (2022)
NAD 83, UTM Zone 17
St. Johns Property Appraiser St. Augustine Boundary
City of St. Augustine Municipal Boundary
Previously Recorded Structure
Newly Recorded Structure
St. Augu
Beach
feet
0
meters
400
0
100
Scale: 1:5,000
Project Location
For Official Use Only.
Public Disclosure of Archaeological Site Locations is Prohibited (54 USC 307103)
SJ08747
SJ08234
Inlet Pl
SJ08539
SJ08705
SJ08694
Majos Tacos
Ocean Way
A1A S
Magnolia Dr
SJ08649
SJ08651
Cabeza St
S Lomare Ave
SJ08374
The Corner Bar
SJ08235
SJ08532
SJ08577
SJ08544
SJ08547
SJ08395
SJ08672
SJ08394
Lighthouse Park
Lighthouse Ave
A1A
SJ08743
SJ08742
SJ08754
SJ08410
St Augustine Yacht Club
SJ08418
Frantz Acad
SJ08758
SJ08620
SJ08364
SJ08362
SJ08365
SJ08623
SJ08626
SJ08618
SJ08619
SJ08624
SJ08621
Menendez Rd
Saint Augustine Lighthouse
SJ08371

DIAMOND
VAULT
Time to Shine

ORIS

DIAMOND
VAULT
Time to Shine
ORIS

Blue Water
JEWELERS
DIAMOND
VAULT
ORIS

DIAMOND
VAULT
Blue Water
JEWELERS
ORIS

500 Anastasia Boulevard (c. 1971)
SAHS POLK CITY DIRECTORY RESEARCH

DATE(S)	NAME	SYMBOLS	PROFESSION
1974	Barnett Bank of Anastasia Island		
1989	Barnett Bank of St. Johns County		
1991	Barnett Bank of St. Johns		
1996	Barnett Bank of St. Johns		
2001	Bank of America		

CITY OF ST. AUGUSTINE
HISTORIC ARCHITECTURAL REVIEW BOARD APPLICATION

Certificate of Demolition (Full)

Case Number: HP2025-0084 **Meeting Date: Thursday, January 15, 2026**

1. NAME OF APPLICANT: Matthew H. Lahti
   Business (if applicable):
   Address: 2225 A1A S, Suite A2
   City: St. Augustine State: FL Zip Code: 32080
   Daytime Telephone: Available Upon Request E-Mail Address: Available Upon Request

2. NAME OF PROPERTY OWNER: City of St. Augustine
   Business (if applicable):
   Address: 75 King Street
   City: St. Augustine State: FL Zip Code: 32084
   Daytime Telephone: 904-825-1006 E-Mail Address: rfranklin@citystaug.com

3. PROJECT LOCATION: 500 ANASTASIA BLVD, Saint Augustine, FL, 32080

4. LEGAL DESCRIPTION: 3-100 DAVIS SHORES LOTS 2 3 4 5 & & 15 ALL LOTS 16 17 18 & 19 (EX PT OF LTS 2 & 19 IN OR3874/460) (EX R/W RD #A1A IN OR65/337) BLK 33 OR6082/1951

5. SCOPE OF WORK: to demolish a commercial building, constructed c. 1971, that is recorded in the Florida Master Site File and not located in a district.

Information attached by applicant includes:

- Application Agreement
- COD Report
- Photographs of Existing Conditions
- Proposed Replacement Building/Feature Drawings

Received December 18, 2025
Planning and Building Dept.

HARB APPLICATION AGREEMENT

In filling out this application:

- **I understand that it becomes part of the Public Record of the City of St. Augustine and hereby certify that all information contained herein is accurate to the best of my knowledge.**
- **I further understand that if this application is for an *Opinion of Appropriateness*, I must still obtain a *Certificate of Appropriateness* before applicable permits can be issued for project work to begin. If this application is for a *Certificate of Appropriateness, Demolition*, or *Partial Demolition*, and it is approved, I am required to obtain other development approvals, archaeological review, and a building permit as necessary prior to starting project work.**
- **Once a hearing date has been set and a legal notice has been published or posted, I, or an authorized representative, must be prepared to present the request at the scheduled hearing date. The cost of subsequent hearings requiring re-noticing due to continuance will be assessed to the applicant.**
- **I have been made aware that applications must be sufficiently complete at the time of submittal or may be delayed to a future meeting. Relevant information necessary for application review shall include but not be limited to the items referenced in the "Plan Requirements" section of the Architectural Guidelines for Historic Preservation (AGHP) depending on the scope and scale of the project. The minimum application requirements are marked as required submittal documents in this online application. Contact Planning Staff if the project is unique and needs to be addressed in a different manner. Minor details may be submitted in the portal up to 10 days before the meeting and HARB will determine if additional materials may be presented at the meeting.**

All applicants/owners of record must sign the application agreement. If the property applicant/owner is a governmental agency; licensed business or company; incorporated organization; or an administered estate, an authorized agent may sign. If the applicant is different than the property owner, the application must be signed by both parties. An Authorization Form signed by the property owner(s) and notarized, must be submitted only in the absence of the property owner's signature or where an authorized agent signs in lieu of the property owner.

Project Address: 500 Anastasia Blvd, St. Augustine, FL 32080

Applicant's Name: Gulfstream Design Group Applicant's Signature: _____

Owner's Name: City of St. Augustine Owner's Signature: _____

Owner's Name: _____ Owner's Signature: _____

Owner's Name: _____ Owner's Signature: _____

(Can add additional signature page if needed)

Florida Statute 286.0105 states that a person appealing any decision by this board at any meeting regarding this application may need a verbatim record of the proceedings which includes testimony and evidence upon which the appeal is to be based.

Received December 18, 2025
Planning and Building Dept.

GULFSTREAM
DESIGN GROUP, LLC

City of St. Augustine Fire Station #2

Certification of Demolition (COD)

December 15, 2025

500 Anastasia Blvd
Saint Augustine, FL 32080-0000
Parcel ID: 218570-0000

Prepared for:

City of St. Augustine
75 King Street
Saint Augustine, Florida 32084

Prepared by:

Matt Lahti, P.E., LEED AP
Gulfstream Design Group, LLC
906 Anastasia Blvd, Suite A
Saint Augustine, Florida 32080
(904) 794-4231
matt@gulfstreamdesign.com

Received December 18, 2025
Planning and Building Dept.

GULFSTREAM
DESIGN GROUP, LLC

TABLE OF CONTENTS

1.0 **Property Owner, Applicant, and Agent Information**

2.0 **Request**

3.0 **Property Information**

4.0 **Scope of Work**

5.0 **Demolition Review Criteria**

ATTACHMENTS

A. HARB Application Agreement

B. Agent Authorization Forms

C. Proof of Ownership

D. Map Exhibits

E. Recent Aerial Photographs

F. Site Plan of the Replacement Building

G. Architectural Drawings of the Replacement Building

Received December 18, 2025
Planning and Building Dept.

GULFSTREAM
DESIGN GROUP, LLC

COD Permit Report Narrative

1.0 Property Owner, and Agent Information

Property Owner:
City of St. Augustine
75 Kings Street
Saint Augustine, FL 32084
Contact: Amy Skinner, Director of Planning & Building, planningandbuilding@citystaug.com

Agent:
Gulfstream Design Group, LLC
906 Anastasia Blvd, Suite A
Saint Augustine, Florida 32080
Contact: Matt Lahti, P.E. LEED AP; matt@gulfstreamdesign.com; 1.904.806.2898

2.0 Type of Request

Full demolition of a commercial building, constructed circa 1971, that is recorded in the Florida Master Site File. The structure is non-contributing and is not located within, nor does it contribute to, a National Register Historic District. The proposed work includes complete removal of the existing building and associated site improvements.

3.0 Property Information

Street Address: 500 Anastasia Blvd, St. Augustine, FL 32080
The property is located along Anastasia Boulevard (State Road A1A), a major north–south coastal roadway serving Anastasia Island. SR A1A provides direct access to local beaches, residential areas, commercial uses, and downtown St. Augustine via the Bridge of Lions. Regional connectivity is provided by State Road 312, which links Anastasia Island to U.S. Highway 1 and State Road 207, offering convenient access to inland areas and Interstate 95.

Parcel Identification Number(s):
218570-0000

Total Project Area:
1.27 acres

Future Land Use Designation(s):
Commercial Low Intensity (CLI)

Received December 18, 2025
Planning and Building Dept.

GULFSTREAM
DESIGN GROUP, LLC

Zoning Designation(s):
Commercial Low-Two (CL-2)

Architectural Style:
N/A

Florida Master Site File:
SJ08234

National Register:
N/A

Construction date:
c. 1971

Archaeology Zone:
N/A

4.0 Scope of Work

The building was built in 1971 and is thus more than 50 years old. The building is not in a Historic Preservation Zoning District or National Register Historic District or individually listed on the National Register of Historic Places but is recorded on the Florida Master Site File.

The existing structure located at 500 Anastasia Boulevard, St. Augustine, Florida, was constructed for commercial use and has historically functioned as a neighborhood retail building. The property was most recently occupied by a jewelry retail establishment and has undergone minor renovations and interior improvements over time to support continued commercial operations. These improvements consisted of routine functional upgrades and tenant-related modifications and did not introduce architectural features or design elements associated with historical significance.

The building is recorded in the Florida Master Site File (FMSF); however, its inclusion reflects documentation only and does not confer historic designation or significance. The structure is not listed on the National Register of Historic Places, is not locally designated, and is not a contributing resource within a designated historic district. Based on its age, design, construction, alterations, and use, the building does not meet criteria for historical or architectural significance.

The applicant is seeking full demolition as detailed in the Scope of Work below.

Received December 18, 2025
Planning and Building Dept.

GULFSTREAM
DESIGN GROUP, LLC

Given the proposed full demolition of the existing non-historic commercial structure, review by the Historic Architectural Review Board (HARB) should focus on the effects of demolition rather than replacement materials or architectural modifications. Elements such as window type, siding materials, fenestration patterns, and roof form are not applicable, as no portion of the existing building will remain. Removal of existing materials will occur in their entirety to facilitate site redevelopment.

5.0 Demolition Review Criteria

5.1 Whether or not the structure is within or is immediately facing a locally designated historic preservation zoning district.

GDG: Based on available information, the structure is not located within a locally designated historic preservation zoning district. The property is located along Anastasia Boulevard on Anastasia Island and is outside the City's locally designated historic zoning districts.

5.2 The contribution of the structure to the mass and scale of the streetscape.

GDG: The existing one-story commercial building exhibits limited contribution to the established mass and scale of the surrounding streetscape, which includes a mix of commercial, institutional, and public service uses along Anastasia Boulevard.

5.3 The impact of the loss of the structure on the streetscape.

GDG: Removal of the existing structure is anticipated to have minimal impact on the streetscape, as the building does not exhibit distinctive architectural features and does not define the character or rhythm of surrounding development.

5.4 Whether or not the structure will be replaced and the impact of a replacement structure, or lack thereof, on the streetscape.

GDG: The structure will be replaced with a new fire station to serve Anastasia Island. The replacement facility is expected to provide a compatible institutional presence and improve the functional and visual quality of the corridor through modern design and site planning.

5.5 The historical or cultural merit of the structure.

GDG: The structure is recorded in the Florida Master Site File; however, documentation indicates that it does not possess individual historical or architectural significance and is not designated as a historic resource at the local, state, or national level.

Received December 18, 2025
Planning and Building Dept.

GULFSTREAM
DESIGN GROUP, LLC

5.6 The impact of the loss of the structure on the historical or cultural integrity of the city, district and neighborhood.

GDG: Demolition of the structure is not expected to adversely affect the historical or cultural integrity of the city or surrounding neighborhood, as the building is non-contributing and does not represent a defining historic resource.

5.7 Whether or not the structure is representative of a style or type of architecture or a method of construction.

GDG: The building reflects a typical late-20th-century commercial construction type and does not represent a notable architectural style or significant method of construction.

5.8 Whether or not the structure is one of the last surviving examples of its style or type of architecture or a method of construction.

GDG: The structure is not one of the last surviving examples of its architectural type, as similar commercial buildings from the same period remain common throughout the region.

5.9 Whether or not the structure is of such design, craftsmanship or materials that it either could not be reproduced or could be reproduced only with great difficulty or expense. The condition of the structure, and the possibility of rehabilitating or relocating the structure.

GDG: Full demolition is proposed to allow redevelopment of the site for a new fire station, a critical public safety facility intended to meet current operational requirements, building codes, and community service needs for Anastasia Island.

5.10 The justification for the proposed demolition.

GDG: The structure does not exhibit unique design, craftsmanship, or materials that would preclude reproduction using contemporary construction methods. Given the proposed public safety redevelopment, rehabilitation or relocation is not practical and would not meet project objectives.

Received December 18, 2025
Planning and Building Dept.

Received December 18, 2025
Planning and Building Dept.

Received December 18, 2025
Planning and Building Dept.

Received December 18, 2025
Planning and Building Dept.

2025/01/01 0:03:10
Blue Water
JEWELERS

Received December 18, 2025
Planning and Building Dept.

Received December 18, 2025
Planning and Building Dept.

Received December 18, 2025
Planning and Building Dept.

2025/01/01 0:04:32

Received December 18, 2025
Planning and Building Dept.

2025/01/01 0:05:50
Planning and Building Dept

DIAMOND
VAULT
OR'S

LOCAL
CIRCLE K
SLOW

Received December 18, 2020
Planning and Building Dept.

Received December 18, 2025
Planning and Building Dept.

Received December 18, 2022
Planning and Building Dept.

Received December 18, 2025
Planning and Building Dept.

Received December 18, 2020
Planning and Building Dept.

Received December 2, 2021
- Planning and Zoning

CIRCLE K
Flip Flop Shops

Received December 18, 2025
Planning and Building Dept.

Received December 18, 2025
Planning and Building Dept.

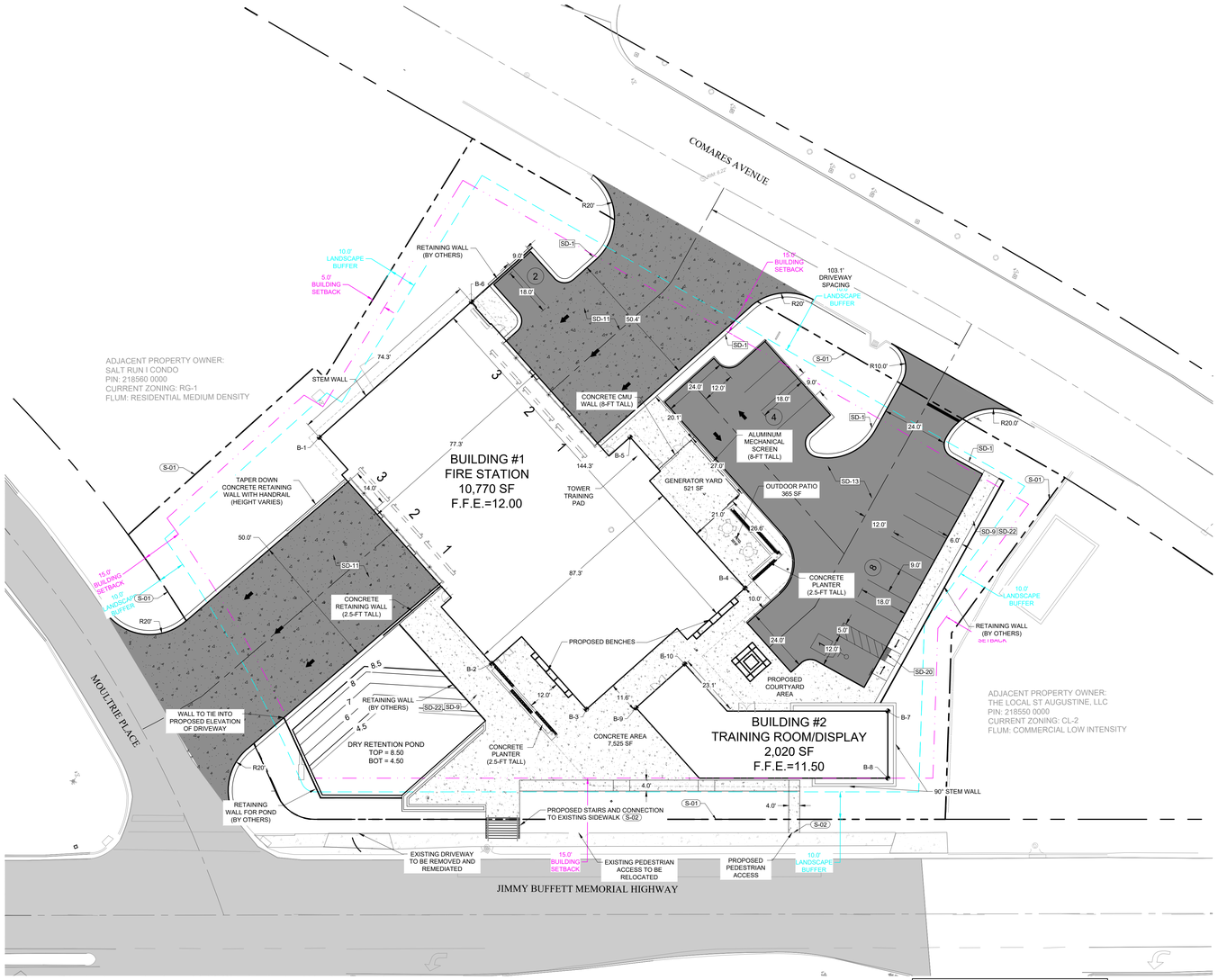

GRAPHIC SCALE

0 20 30 40

1"=20'

LEGEND

EXISTING

- PROPERTY LINE
- R/W LINE
- CENTER LINE
- ASPHALT PAVEMENT

PROPOSED

- CURB & GUTTER
- CENTER LINE
- BUILDING OUTLINE
- XX' SETBACK DIMENSION
- XX' BUFFER DIMENSION
- # STANDARD PARKING COUNT
- # ADA PARKING COUNT
- HEAVY DUTY ASPHALT PAVEMENT
- HEAVY DUTY CONCRETE PAVEMENT
- CONCRETE SIDEWALK

GENERAL SITE NOTES:

1. ALL SITE CONSTRUCTION SHALL BE IN ACCORDANCE WITH THE LATEST STANDARDS OF THE CITY OF ST. AUGUSTINE LAND DEVELOPMENT CODE.
2. ALL DIMENSIONS ARE SHOWN TO FACE OF CURB UNLESS OTHERWISE NOTED.
3. BUILDING DIMENSIONS FOR REFERENCE ONLY. SEE ARCHITECTURAL PLANS BY, FOR EXACT DIMENSIONS. CIVIL PLANS REFERENCE EXTERIOR WALL DIMENSIONS. CONTRACTOR TO VERIFY FOUNDATION AND ROOF OVERHANG.
4. ALL HANDICAP RAMPS SHALL MEET CURRENT ADA REQUIREMENTS AND INCLUDE DETECTABLE WARNING PER CITY OF ST. AUGUSTINE REQUIREMENTS.
5. CONTRACTOR SHALL STAKE EACH STAGE OF WORK, HORIZONTAL AND VERTICAL, IN ADVANCE OF CONSTRUCTION TO ENSURE THAT NO CONFLICTS EXIST. CONTRACTOR SHALL NOTIFY GULFSTREAM DESIGN GROUP, LLC. IMMEDIATELY IF CONDITIONS DIFFER IN THE FIELD.
6. CONTRACTOR SHALL BE RESPONSIBLE FOR VERIFICATION OF ALL SETBACKS AND/OR EXISTING EASEMENTS BEFORE BEGINNING CONSTRUCTION.
7. THE CONTRACTOR SHALL IMMEDIATELY REPORT TO THE ENGINEER, ANY EXTRA WORK REQUESTED BY ANY REGULATORY AGENCY THAT IS NOT SHOWN ON THE PLANS. THIS EXTRA WORK MUST BE APPROVED BY THE ENGINEER AND THE OWNER BEFORE THE CONTRACTOR PROCEEDS WITH THE EXTRA WORK.
8. ALL ELEMENTS THAT ARE PLACES OF PUBLIC ACCOMMOADTIONS AND COMMERCIAL FACILITIES ON THE SITE (INCLUDING ACCESSIBLE ROUTES AND PARKING) SHALL MEET THE REQUIREMENTS OF "FLORIDA AMERICANS WITH DISABILITIES ACCESSIBILITY IMPLEMENTATION ACT", ADA STANDARDS FOR ACCESSIBLE DESIGN, FLORIDA BUILDING CODE - ACCESSIBILITY AND THE FAIR HOUSING ACT, WHEN APPLICABLE.
9. ALL OUTSIDE STORAGE YARDS MUST BE FENCED PER CITY OF ST. AUGUSTINE REQUIREMENTS.
10. PRIOR TO TRANSFER OF PROPERTY OWNERSHIP (REAL LAND OR CHANGE IN OWNERSHIP) FOR ANY PORTIONS OF THE APPROVED OR CONSTRUCTED BUILDING, OWNERSHIP DOCUMENTS MUST BE SUBMITTED TO THE BUILDING DEPARTMENT IN ORDER TO MAKE SURE OWNERSHIP DOES NOT VIOLATE BUILDING CODE.
11. ALL SIGNS SHALL MEET THE REQUIREMENTS OF CITY OF ST. AUGUSTINE LDC.
12. APPROXIMATE LOCATION OF PROJECT SIGNAGE SHOWN HEREON.
13. NO DUMPSTER REQUIRED PER CITY OF ST. AUGUSTINE
14. LIGHT FIXTURES SHALL MEET THE DSEC REQUIREMENTS THAT BULBS ARE NOT VISIBLE AND HAVE A TEMPERATURE OF 2700K-3000K

SITE DETAILS SD-XX

SD-1 TYPE D CURB
SD-9 CONCRETE SIDEWALK
SD-11 HEAVY DUTY CONCRETE PAVEMENT SECTION
SD-13 HEAVY DUTY PAVEMENT SECTION
SD-20 WHEELCHAIR RAMP IN SIDEWALK
SD-22 THICKENED EDGE SIDEWALK

SITE KEY NOTES: S-XX

S-01 PROPERTY LINE
S-02 CONNECT TO EXISTING SIDEWALK

SITE DATA TABLE

GROSS PROPERTY AREA:	55,321 SF	1.27 AC
BUILDING FOOTPRINT AREA:	12,790 SF	0.29 AC
PARKING AND DRIVEWAYS:	17,467 SF	0.40 AC
SIDEWALK AREA:	7,525 SF	0.17 AC
TOTAL IMPERVIOUS AREA:	37,782 SF	0.87 AC
PROPERTY ID NO:		218570 0000
ZONING:		N/A
FLUM:		N/A
FEMA FIRM PANEL NUMBER		12109C0314J
	MAXIMUM:	PROPOSED
IMPERVIOUS SURFACE AREA RATIO:	75.00%	68.30%
FLOOR AREA RATIO:	75.00%	23.12%
BUILDING HEIGHT:	30'	±30'

BUILDING POINT TABLE

POINT #	NORTHING	EASTING
B-1	2020328.2205	562719.5204
B-2	2020228.2431	562746.7114
B-3	2020199.7422	562772.4791
B-4	2020218.9478	562842.7127
B-5	2020285.7012	562824.5711
B-6	2020353.1961	562789.5599
B-7	2020157.7992	562874.0557
B-8	2020135.1259	562864.8555
B-9	2020193.4198	562789.4343
B-10	2020201.5589	562811.9013

PARKING CALCULATIONS

USE	PROPOSED BUILDING AREA (SF)	PROVIDED PARKING SPACES
FIRE STATION & TRAINING ROOM	12,790 SF	14
ADA PARKING SPACES		1
TOTAL PARKING SPACES		15

BUFFER & SETBACK TABLE

BUFFERS & SETBACKS	MINIMUM	PROPOSED
FRONT BUILDING SETBACK (W,E)	15'	15'
SIDE BUILDING SETBACK (N,S)	5'	5'
FRONT LANDSCAPE BUFFER (W,E)	10'	10'
SIDE LANDSCAPE BUFFER (N,S)	10'	10'

REVISIONS

NO.	DATE	BY	DESCRIPTION
1	11-25-25	TVB	PER COSA COMMENTS
2			
3			
4			
5			
6			
7			
8			
9			

ENGINEERING PLANS FOR COSA FIRE STATION #2 GEOMETRY CONTROL POINTS

CITY OF ST. AUGUSTINE, FLORIDA

811 Know what's below. Call before you dig.

FOR PERMIT REVIEW

GULFSTREAM DESIGN GROUP, LLC
2225 A1A S, SUITE A2
ST. AUGUSTINE, FLORIDA 32080
904.794.4231
matt@gulfstreamdesign.com

© GULFSTREAM DESIGN GROUP, LLC 2025

PROJECT NO:	24-212
ISSUE DATE:	8-15-2025
DRAFTED BY:	TDP
DESIGNED BY:	TVB
CHECKED BY:	MHL

NOT VALID WITHOUT SEAL

8

NO.	DESCRIPTION	DATE

PRELIMINARY PROGRESS PRINT
SD
08/15/25
SUBMITTAL
NOT FOR CONSTRUCTION

name:
professional license no.:

client:

construction manager:

prime architect: JL2 ARCHITECTURE

consultant: KUBO STUDIO

project name: FIRE STATION NO. 2
project address: 500 A1A/ASTASIA BLVD, ST AUGUSTINE, FL 32080
client name: CITY OF ST. AUGUSTINE
sheet title: SCHEMATIC DESIGN

SITE PLAN

issue date:	08/15/25
project no.:	2024-P027
designed by:	TVB
drawn by:	TDP
scale:	1/16" = 1'-0"

sheet number:

C-8

Received December 18, 2025
Planning and Building Dept.

EXTERIOR FINISH LEGEND

MATERIAL KEY	DESCRIPTION	COLOR
WP-1	CONCRETE WALL PANEL	SMOKE - CONCRETE WITH EXPOSED BOLT HOLES
WP-2	GROUND FACE CMU	BOD: WESTBROOK GFP-647
EM-1	EXTERIOR METAL	DARK GREY
GF-1	GROUND FACE CMU	WHITE
AFS-1	ALUMINUM FRAME STOREFRONT	DARK GREY
PT-1	PAINT	LIGHT GREY
PT-2	PAINT	RED

NOTES:

SHEET NOTES:

A REFER TO SHEET AE001 FOR ARCHITECTURAL NOTES, ABBREVIATIONS, AND SYMBOLS.

B WHERE COLOR IS SHOWN AS BEING SPECIFIC TO ONE MANUFACTURER, AN EQUIVALENT COLOR BY ANOTHER MANUFACTURER MAY BE SUBMITTED FOR APPROVAL. MANUFACTURERS AND MATERIALS SPECIFIED ARE NOT INTENDED TO LIMIT THE SELECTION OF EQUAL COLORS FROM OTHER MANUFACTURERS.

C COORDINATE ALL EXTERIOR EQUIPMENT WITH ENGINEERING DRAWINGS.

D ARROWS INDICATE ROOF SLOPE.

E ARCHITECTURAL ELEVATION FOR FIRST FLOOR TOP OF SLAB IS DEFINED AS 0'-0". REFER TO CIVIL PLANS FOR SLAB ELEVATIONS RELATIVE TO NORTH AMERICAN VERTICAL DATUM (NMVD) SYSTEM.

F REFER TO SHEETS AE103 , OVERALL ROOF PLANS, FOR DOWNSPOUT LOCATIONS.

MATERIAL NOTES

042200.D31	GROUND FACED MASONRY UNIT 8"
042200.D32	GROUND FACED MASONRY UNIT 12"
055000.B01	STEEL BOLLARD
083323.A01	OVERHEAD COILING DOOR
083513.A01	FOUR FOLDING DOOR
084113.A01	GLAZED ALUMINUM STOREFRONT SYSTEM

KEY NOTES (00)

1 ALUMINUM LOUVERED MECHANICAL SCREEN
2 CONCRETE RETAINING WALL (WP-2)
3 ALUMINUM FASCIA (EM-1)
4 CONCRETE WALL PANELS (WP-2)
5 CONCRETE PLANTER (WP-2)
6 CONCRETE BREEZE BLOCKS; BOD: BERMUDA GEOMETRIC BLOCK BY VILLA LAGOON TILE IN RED
7 METAL SIGNAGE (EM-1)
8 METAL SIGNAGE (PT-2)

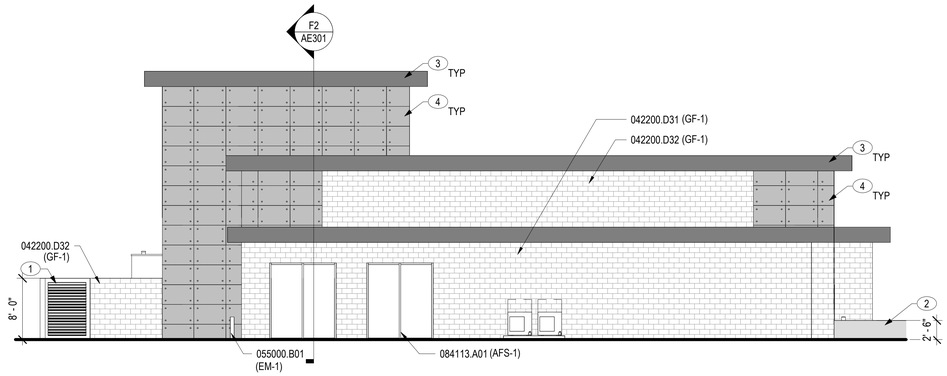

C1 EXTERIOR BUILDING ELEVATION, WEST
1/8" = 1'-0"

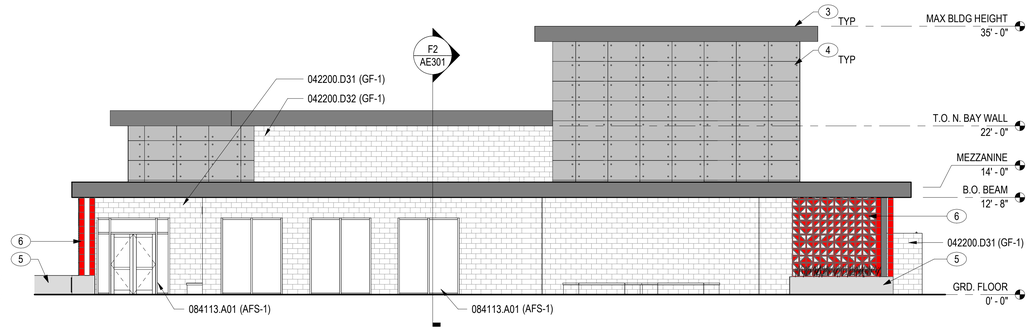

C4 MAIN BUILDING - EAST ELEVATION
1/8" = 1'-0"

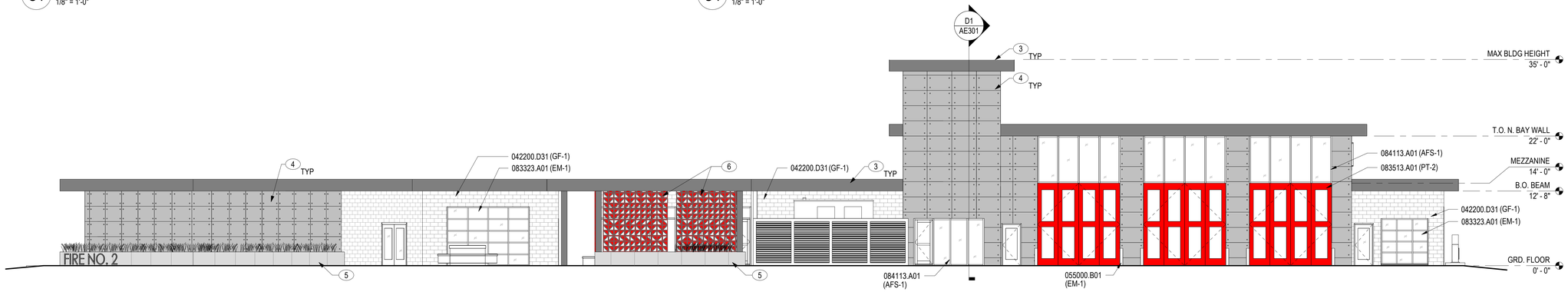

D1 OVERALL BUILDING ELEVATION - NORTH
1/8" = 1'-0"

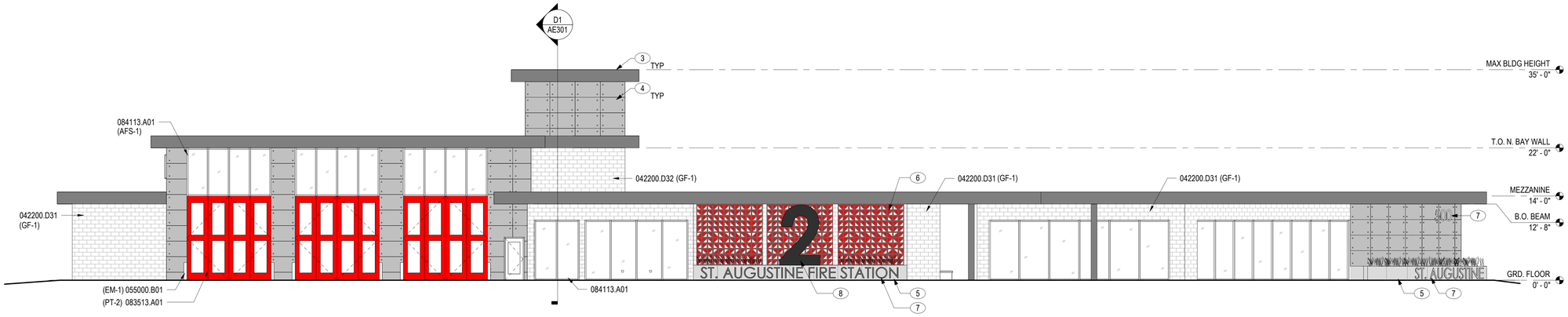

F1 OVERALL BUILDING ELEVATION - SOUTH
1/8" = 1'-0"

0 4' 8' 16' 24' 32'
1/8" = 1'-0" GRAPHIC SCALE

IF THIS SHEET MEASURES LESS THAN 42" x 30", IT HAS BEEN REDUCED

NO.	DESCRIPTION	DATE

PRELIMINARY PROGRESS PRINT
SD
08/15/25
SUBMITTAL
NOT FOR CONSTRUCTION

name:
professional license no.:

client:

construction manager:

prime architect:

consultant:

project name: FIRE STATION NO. 2
project address: CITY OF ST. AUGUSTINE
project status: 500 ANASTASIA BLVD, ST AUGUSTINE, FL 32080
SCHEMATIC DESIGN
sheet title: EXTERIOR BUILDING ELEVATIONS

issue date:	08/15/25
project no.:	2024-P027
designed by:	BCP
drawn by:	BCP
scale:	As indicated

sheet number:

AE201

9/3/2025 5:32:20 PM

CITY OF ST. AUGUSTINE HISTORIC ARCHITECTURAL REVIEW BOARD

STAFF REPORT AND RECOMMENDATION

Prepared for January 15, 2025 Meeting

Application HP2025-0087 Address: 7 Saragossa Street

A & O Builders – Applicant True Real Estate Investments, LLC – Owner

Project description: For partial demolition of a residential building, constructed c. 1917-1924, that is recorded in the Florida Master Site File and contributing to the Model Land Company National Register Historic District, to include after-the-fact wholesale replacement of windows with a different material and design and fenestration changes.

Architectural Style:	Frame Vernacular	Florida Master Site File:	SJ02089
National Register:	Model Land Company NRHD: Contributing	Construction date:	c. 1917-1924
Archaeology Zone:	N/A	Zoning District:	RS-1
Parcel number:	2055200000		
Agenda Item:	7(b)	Previous Action(s):	N/A

STAFF SUMMARY AND ANALYSIS:

This 2-1/2 story residence is located on the south side of Saragossa Street on the block between Cordova and Sevilla Streets. The initial Florida Master Site File form and Model Land Company National Register Historic District nomination indicate the building as a Frame Vernacular structure that had been altered but remained contributing to the district. Early iterations of the NRHD update, which has not yet been adopted, noted the structure as non-contributing due to alterations; however, the most recent update draft indicates the building to be a contributing Prairie style structure, likely due to the low-sloped hip roof, squared porch columns, and wide two-story front porch that emphasizes horizontal lines. This architectural style classification may be changed with the final edit.

The applicant is seeking after-the-fact approval for wholesale replacement of windows. Previously existing windows were wood, and, according to the applicant, were in poor condition. Window replacement was done in conjunction with permitted rehabilitation of the structure; however, the project scope approved under the permit did not include wholesale window replacement.

The initial permit was reviewed by Historic Preservation staff who requested both written and verbal clarification of the project scope. Discussions with the applicant suggested that windows on the primary façade were not being replaced, but the project included replacement of some windows in the rear of the building that would not have triggered partial demolition review due to the limited number of replacements and lack of visibility from the street. Staff approved the application as it was understood with the condition that one window proposed for removal on the east elevation be retained and closed in from the inside.

Detailed analysis and additional comments can be found in the staff responses to the Demolition Review Criteria on page 3 of this staff report. Any partial demolition of a structure that contributes to a National Register Historic District and entails permanent removal of an exterior architectural feature or replacement with a new feature that does not meet the criteria for in-kind replacement requires review and approval by the HARB.

STAFF RECOMMENDATION:

Based on a review of the AGHP and without the support of evidence to the contrary, staff finds that the board can **CONTINUE** an **After-the-Fact Certificate of Demolition for Partial Demolition** at **7 Saragossa Street** to allow the applcant time to consider windows and fenestration patterns of a more appropriate design for visible elevations.

Candice Seymour

SUMMARY SCOPE OF WORK:

1. Partial demolition to include:
    a. Removal of previously existing 1/1 wood windows
    b. Replacement with new 1/1 vinyl windows that sit in a different location within the window opening
    c. Changes to fenestration

DEMOLITION REVIEW CRITERIA (AGHP):

1. Whether or not the structure is within or is immediately facing a locally designated historic preservation zoning district. N/A

2. Whether or not the structure is within and contributing to a National Register Historic District. Yes, the building is designated as contributing to the Model Land Company National Register Historic District.

3. The contribution of the architectural element(s) being proposed for removal to the historic integrity of the building and the streetscape. The windows that have been removed and replaced contributed to both the structure's and streetscapes history. Particularly, the windows that enclosed the second story porch were architecturally impactful to the front façade and indicated the previously open state of the space.

4. The impact of the loss of the architectural element(s) on the building and along the streetscape. Loss of the windows and original fenestration patterns visible along the streetscape will dramatically impact the look of the structure unless appropriately replaced with windows of a similar design to the original wood windows that match the original fenestration pattern, particularly on the front elevation.

5. Whether or not the architectural element(s) will be replaced, and the impact of replacement or lack thereof, on the building and along the streetscape. The original 1/1 wood windows have been removed, and several have already been replaced with 1/1 vinyl windows, some of varying sizes. Staff has advised that vinyl windows are not typically approved for historic structures based upon how they are installed to sit flat on the exterior wall plain. The applicant has expressed that they can frame-out the proposed vinyl windows to appear more like wood. Examples of the proposed framing were provided in the application packet. Previously existing exterior framing appears to have been minimal but may be hidden behind existing aluminum siding. The Board may recommend an appropriate framing style. More detailed drawings should be provided to illustrate how the framing will make the proposed vinyl windows reflect the depth of wood windows.

6. The historical or cultural merit of the structure and/or its architectural features. No historic or cultural associations are known that would qualify the building for listing individually, although it contributes to its district. The original fenestration reflected both the original and historically modified architecture of the building.

7. The impact of the loss of the architectural element(s) on the historical or cultural integrity of the structure, district, and neighborhood. Loss of the windows and original fenestration patterns visible along the streetscape erodes the historic integrity of the already-altered structure, as well as removes original fabric from the structure and the neighborhood. The proposed change may be mitigated with appropriate replacement windows of a similar design to the original wood windows and that match the original fenestration pattern, particularly on the front elevation.

8. Whether or not the structure and the architectural element(s) proposed for demolition are representative of a style or type of architecture or a method of construction. The building is an example of a Frame Vernacular structure that has seen modifications over time. The original windows and fenestration pattern reflected those historic changes and enhanced the structure's architectural style. The string of windows around the second story porch was a unique feature along the streetscape that enhanced the structure's architectural style.

9. ***Whether or not the structure, or the architectural elements being removed, are the last surviving examples of its style or type of architecture or a method of construction.*** The building typology is commonly found throughout St. Augustine particularly in the Model Land and Lincolnville neighborhoods. The Prairie features on the structure are less common throughout the neighborhood and St. Augustine.

10. ***Whether or not the structure and/or architectural element(s) proposed for demolition are of such design, craftsmanship or materials that they either could not be reproduced or could be reproduced only with great difficulty or expense.*** The windows were not of such design, craftsmanship, or material that they could not be reproduced. The previously existing windows, framing style, and fenestration can be matched.

11. ***The justification for the proposed partial demolition.*** The applicant has suggested that the original windows were in poor condition and required replacement. They have also asserted that they can successfully match the depth of a wood window through thicker framing.

APPLICATION REQUIREMENTS, ELIGIBILITY FOR DEMOLITION REVIEW, CONDITIONS FOR PARTIAL DEMOLITION APPROVAL:

Eligibility for Partial Demolition Review (Section 28-87(3), CoSA Code of Ordinances)

The Historic Architectural Review Board (HARB) is responsible for review of all applications for demolition or partial demolition permits for historic or regulated structures. Also, review of all applications for demolition or partial demolition permits for primary structures within historic preservation zoning districts and National Register districts for potential designation as an historic landmark, and review of partial demolition permits for regulated structures not eligible for administrative approval.

Regulated Structures not eligible for administrative approval (Section 28-2 – Definitions, CoSA Code of Ordinances)

Architectural feature limited review consists of the architectural review of limited physical elements of a regulated structure to be replaced after partial demolition. This limited review will focus on the overall character of the key elements of the structure visible from the street. Key elements that will be reviewed will be roofs (shape, size, placement), exterior windows and doors (number and placement of openings, shape and pattern of panes or lites, and design features visible from outside the regulated structure such as exterior muntin with a raised profile), porches, stoops, and balconies (shape, size, placement), exterior siding (vertical, horizontal, or diagonal placement of similar sized boards, siding profile and pattern). The review is for exterior elements and may include interior works or features of architectural elements. Applications that match the replacements after a partial demolition to these existing key architectural elements or use in-kind features or materials as existing will be deemed in compliance with this limited architectural review and can be approved administratively. Applicants who do not want to use in-kind features or materials as existing, not match the replacements to those existing key architectural elements after partial demolition will be heard at a public hearing before the HARB or other designated reviewing agency. This category of limited review does not apply to properties in the Historic Preservation Zoning Districts of the City.

In-kind features or materials means using architecturally similar material and design to convey the visual appearance of the remaining parts of the feature and finish

Partial demolition a partial demolition for purposes of proposed work on a historic structure or a regulated structure within the City of St. Augustine is considered the permanent removal of 50% of the appraised value or more of historic, individual elements of the building envelope (roof, walls, porches, windows, foundations). It also includes the removal of these historic features regardless of the percentage of the appraised value when they are on visible sides of the building (visible from the street).

Regulated structure is a building or a part of a building that is the subject of a partial demolition and that is not located in the City's Historic Preservation Zoning Districts but meets the following criteria of a Historic structure: It is individually listed as historic locally or nationally, or it is a contributing property in a designated National Register District, or it is a designated historic landmark.

Criteria for Review of a Certificate of Partial Demolition (Section 28-89(2)d.4, CoSA Code of Ordinances)

In the case of partial demolition: the board shall find that the proposed replacement materials including historic materials as well as compatible substitute materials maintain the historic character and integrity of the structure and are compatible with the historic structure's building envelope or the removal will not compromise the overall historic character and integrity of the structure.

Criteria for Regulated Structures (Section 28-89(3), CoSA Code of Ordinances)

Replacement elements for regulated structures as defined in this code will be reviewed consistent with the procedures for architectural feature limited review. The board will apply the adopted design criteria, if any, for the area or AGHP if applicable to the regulated structure. If no design criteria have been adopted, the board will accept evidence and testimony to establish relevant architectural features. Some regulated structures may have architectural features that support its historic character and historic period, as well as modifications or additions over time. The board will accept evidence and testimony to establish whether the architectural features should meet preservation or reconstruction standards.

(Section 28-89(5), CoSA Code of Ordinances) **Applications for partial demolition of buildings listed on the National Register of Historic Places, contributing or potentially contributing to a historic district in the National Register of Historic Places, listed as a local historic landmark pursuant to this Code, listed as a potential landmark identified in the Historic Preservation Element of the Comprehensive Plan, Master Plan or identified by historic preservation planning staff as culturally significant within the recent past,** may apply for the demolition of additional components of the building as part of a more comprehensive rehabilitation plan. Staff may require that the application be reviewed as a full demolition with required documentation, appropriate condition assessment and a rehabilitation plan, recognizing that applicants may encounter unforeseen building damage, site conditions, flood mitigation obstacles, or other significant and demonstrable reasons justifying a more extensive partial demolition as part of the rehabilitation. In issuing a certificate of demolition or partial demolition, the board may include approval of both the partial demolition and potential related additional demolition and its rehabilitated replacement design under one application. This will allow the approval of drawings sufficient for a building permit and that all necessary requirements for the new construction related to the demolition or partial demolition are submitted for permitting review and approval by staff.

~~~~~

The building was built by 1924, is not in a Historic Preservation Zoning District or individually listed on the National Register of Historic Places, but is recorded on the Florida Master Site File and listed as a contributing building in the Model Land Company National Register Historic District. The replacement windows installed do not use in-kind features or materials or match architectural elements of those previously existing and the historic/previously existing fenestration pattern has been altered.

The requirements for review have been sufficiently met.
~~~~~

UNREASONABLE OR UNDUE ECONOMIC HARDSHIP:
Defined as an onerous and excessive financial burden that would be placed upon a property owner by the denial of a certificate of demolition or a similar burden which would be placed on a property owner by conditions which the Commission seeks to place on the granting of a certificate. (Section 28-2 CoSA Code of Ordinances)
Is applicant entitled to a Certificate of Demolition independent of any hardship? ☐ Yes ☑ No
Did applicant submit evidence of undue economic hardship? ☐ Yes ☑ No

In any instance where an undue economic hardship, as defined in this chapter, is claimed by a property owner, the property owner may submit to the board any or all of the following information before the board makes a decision on the application for certificate of demolition: (Section 28-89(7)b, CoSA Code of Ordinances)

(Materials submitted by applicant noted with a checked box)

- ☐ 1. An estimate of the cost of the proposed construction, alteration, demolition, or removal;
- ☐ 2. The estimated market value of the property in its current condition; after completion of the proposed construction, alteration, demolition, or removal; and, in the case of a proposed demolition, after renovation of the existing property for continued use;
- ☐ 3. In the case of a proposed demolition, an estimate from an architect, developer, licensed contractor, real estate consultant, appraiser, or other real estate professional experienced in rehabilitation as to the economic feasibility of rehabilitation or reuse of the existing structure on the property;
- ☐ 4. The annual gross income from the property for the previous two (2) years; itemized operating and maintenance expenses for the previous two (2) years; and depreciation deduction and annual cash flow before and after debt service, if any, during the same period;
- ☐ 5. The remaining balance on any mortgage or other financing secured by the property and annual debt service, if any, for the previous two (2) years;
- ☐ 6. All appraisals obtained within the previous two (2) years by the owner or applicant in connection with the purchase, financing, or ownership of the property;
- ☐ 7. Any listing of the property for sale or rent, price asked, and offers received, if any, within the previous two (2) years;
- ☐ 8. The assessed value of the property according to the two (2) most recent assessments;
- ☐ 9. The real estate taxes for the previous two (2) years;
- ☐ 10. The form of ownership or operation of the property, whether an individual, sole proprietorship, for profit or not-for-profit corporation, limited partnership, joint venture, or other;

Any other information considered necessary by the board to a determination as to whether the property does yield or may yield a reasonable return to the property owner. The board may require that the property owner furnish such additional information as the board believes is relevant to the board's determination of any alleged undue economic hardship. No decision of the board shall result in undue economic hardship for the property owner. In any case where undue economic hardship is claimed, the board shall make two (2) specific findings. First, the board shall determine if the owner would be entitled to a certificate of demolition without consideration of undue economic hardship. Second, the board shall determine whether the owner demonstrated an undue economic hardship.

Additional information requested by HARB as per above:

LIST OF ATTACHMENTS:

1. Staff Photographs
2. Florida Master Site File
3. Sanborn Maps
4. Approved Scope of Work from Issued Permit

STAFF PHOTOGRAPHS
7 Saragossa Street

Front (north) Elevation

STAFF PHOTOGRAPHS
7 Saragossa Street

Front (north) Elevation

STAFF PHOTOGRAPHS
7 Saragossa Street

Northwest Elevation

STAFF PHOTOGRAPHS
7 Saragossa Street

West Elevation

STAFF PHOTOGRAPHS
7 Saragossa Street

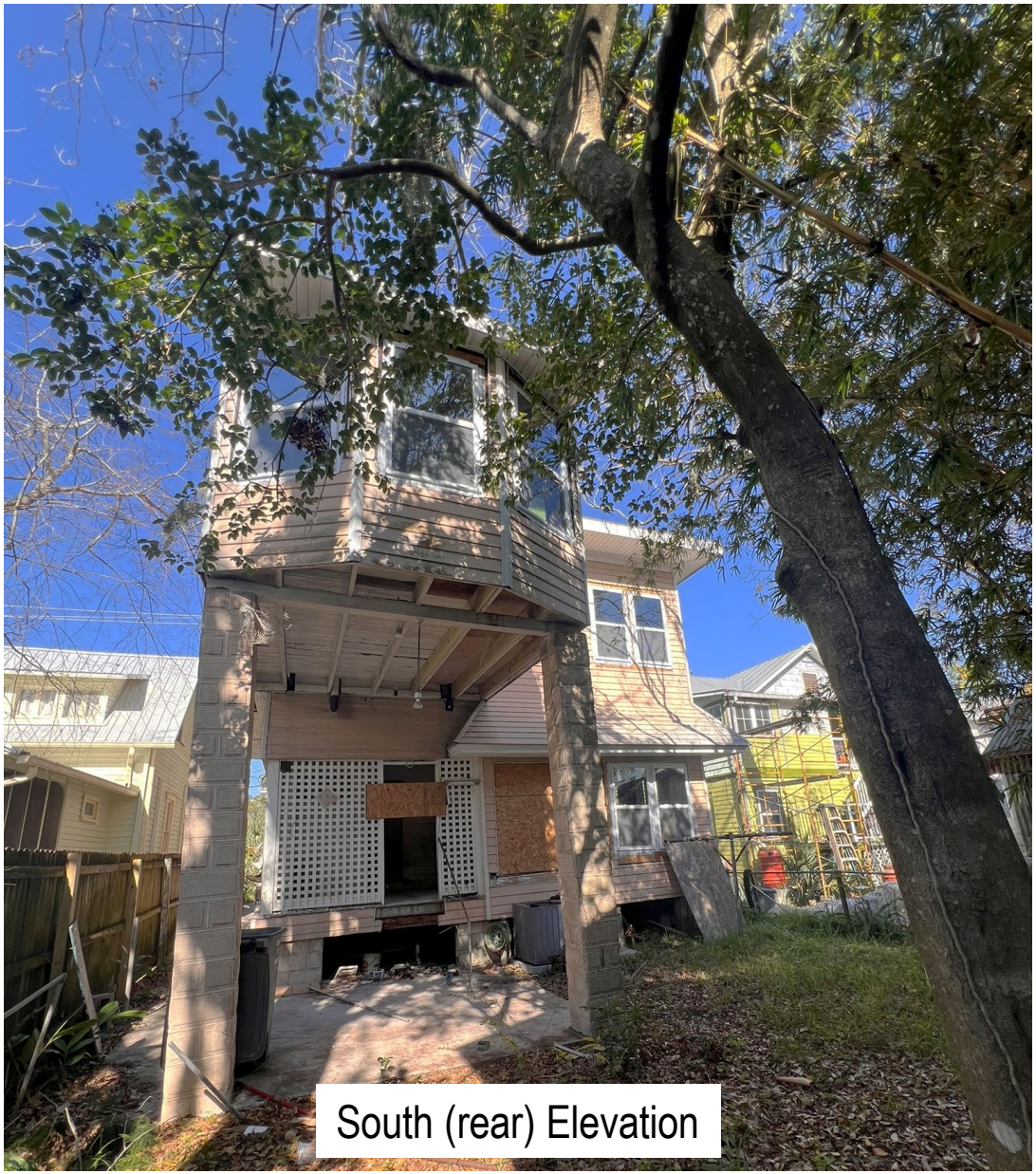

South (rear) Elevation

STAFF PHOTOGRAPHS
7 Saragossa Street

South (rear) Elevation

STAFF PHOTOGRAPHS
7 Saragossa Street

STAFF PHOTOGRAPHS
7 Saragossa Street

Northeast Elevation

STAFF PHOTOGRAPHS
7 Saragossa Street

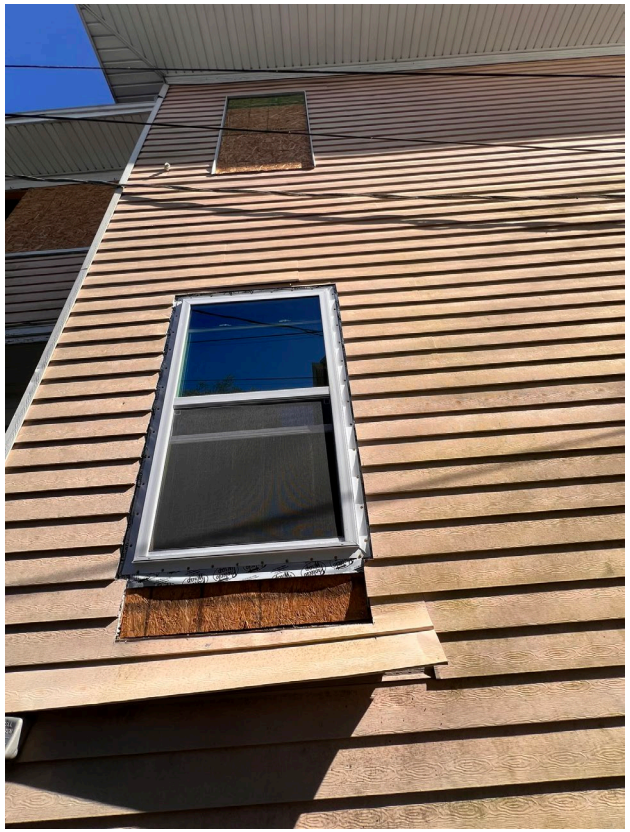

Window and Building Details

STAFF PHOTOGRAPHS
7 Saragossa Street

Context

STAFF PHOTOGRAPHS
7 Saragossa Street

Structure Prior to Alterations (MLS Photo)

STAFF PHOTOGRAPHS
7 Saragossa Street

Structure Prior to Alterations (Google Street View – May 2024)

FLORIDA MASTER SITE FILE

HISTORIC ST. AUGUSTINE PRESERVATION BOARD

HISTORIC PROPERTIES INVENTORY FORM

I. LOCATION & LEGAL DESCRIPTION

FDAHRM 802== Site No. 8 SJ 2089 1009==

Site Name: 7 Saragossa Street 830== Survey Date: 7807 820==

Address: 7 Saragossa Street, St. Augustine, Fla. 32084 905==

Instructions for Locating:

813== County: St. Johns 808==

Location: Model Land Company (subdivision) K (block) 16-B (lot) 868==

868==

Owner of Site: Name: Allen, Joseph C. & Rita;

Address: 7 Saragossa Street

St. Augustine, Fla. 32084 902==

Occupant or Manager: 904==

Type of Ownership: Private 848== Zoning: RSE

NR Classification Category: Building 916== Recording Date: 832==

UTM: 17 (zone) 469540 (easting) 3307114 (northing) 890== Location: T07S (T) R30E (R) N18 (S) 812==

Map Reference: USGS St. Augustine 7.5 MIN 1956 (PR 1970) 809==

Recorder: Name & Title: Harper, Robert W. (Assistant Curator);

Address: H.S.AP.B. 818==

II. SITE DESCRIPTION

Condition of Site:

( ) Excellent 863==

(X) Good 863==

( ) Fair 863==

( ) Deteriorated 863==

Integrity of Site:

(X) Altered 858==

( ) Unaltered 858==

(X) Original Site 858==

( ) Restored - Date: 858==

( ) Moved - Date: 858==

Threats to Site:

( ) Zoning 878==

( ) Development 878==

( ) Deterioration 878==

( ) Borrowing 878==

( ) Transportation 878==

( ) Fill 878==

( ) Dredge 878==

( ) Other 878==

SEE SITE FILE STAFF FOR ORIGINAL PHOTO(S) OR MAP(S)

II. SITE DESCRIPTION, continued.

Original Use: Priv. Residence 838== Present Use: Priv. Residence 850==

Date: +1924 844== Period: 20th Cent. 845== Culture: American 840==

Architect: 872==

Builder: 874==

Style: Frame vernacular 964==

Plan Type: Rectangular 966==

Exterior Fabrics: Metal, aluminum siding, concrete block(rusticated) 854==

Structural Systems: Wood frame 856==

Features of Structure: (942)

Window Type: DHS 1/1 942==

Foundation: 942==

Roof Type: Hip 942==

Secondary Roof Structures: Hip dormer, hip porch 942==

Porches & Balconies: 2 story porch on front, screened first floor, enclosed second 942==

Chimney Location: Center ridge 942==

Materials: (882)

Chimney: Brick 882==

Roof Surfacing: Composition shingles 882==

Ornament Exterior: Cast concrete columns 882==

Quantitative Data: (950-954)

Chimneys: 1 952== Dormers: 954== Stories: 2½ 950==

Other: Front porch of locally produced coquina concrete block 956==

Surroundings: Residential 864==

Relationship to Surroundings: 859==

III. PHOTOGRAPHY

Photographic Records Numbers: 860==

Contact Prints

IV. SIGNIFICANCE

Areas of Significance: Architecture

920==

Statement of Significance: (911==)

ARCHITECTURE

This two and one-half story Frame Vernacular residence was constructed between 1917 and 1924 at the 7 Saragossa Street address. The two-story porch is enclosed on the second floor. The screened first floor consists of cast concrete columns and is constructed from locally produced coquina concrete blocks.

The range of buildings in this area of Model Land Company Subdivision go from grand winter residences of the Flagler Era to expensive homes of the 1950's erected on the former site of the Flagler Mansion, "Kirkside", to more modest homes of several different generations. There are a number of churches of extraordinary architectural interest as well. The original development here was late Victorian or Colonial Revival in style, and this continues to give the area its character. But building, or rebuilding, in the area continues to the present day, given the desirability of the neighborhood, and it contains examples from many different time periods. The area is bordered on the east by the St. Augustine National Landmark Historic District, and one building, the Grace Methodist Church on 8 Carrera Street, is listed on the National Register of Historic Places. While retaining many outstanding buildings, this area has suffered from the past demolition of outstanding buildings like Kirkside and the Barcelona Hotel. The heavily institutional presence in the neighborhood, both church and college, creates continuing traffic and parking problems, and pressures for further demolitions. There is also a drainage problem in the area when it rains.

HISTORY

The core of the Model Land Company Subdivision evolved out of four late 18th century Spanish land grants and the Royal Powder House lot which was located approximately within the area encompassed by Cordova, Riberia, Saragossa, and Carrera Street. The eastern boundary of this section was formed by the 18th century Rosario defense line.(1) In recognition of the Spanish heritage of the old city, Flagler named most streets in the subdivision after cities in Spain. With the exception of Cordova Street and St. Andrews Place, the late 19th century development in this core section represents the best in the subdivision, and includes the monumental Flagler

(over)

V. BIBLIOGRAPHY

1. Juan Joseph Elixio de la Puente, "Plano de . . . San Agustin de Florida", January 22, 1764; Benjamin Clements, "Plan of the City of St. Augustine, 1834-1835".

2. H. H. Stackhouse, "The Model Land Tract: The Development of a Residential Neighborhood", El Escribano, Vol. 16 (1979), pp. 25-32.

churches and the large private residences of wealthy winter residents and senior officials of the Flagler organization. The Model Land Company received title to the unsold lots in 1903 and development continued through the 1950's after the demolition of the Flagler winter home, "Kirkside", and the subdividing of the estate west of the Presbyterian church into spacious lots.(2)

☐ Original
☒ Update

HISTORICAL STRUCTURE FORM
FLORIDA MASTER SITE FILE
Version 5.0 3/19

Site#8 SJ02089
Field Date 10-8-2020
Form Date 12-21-2020
Recorder # AWS

Shaded Fields represent the minimum acceptable level of documentation.
Consult the *Guide to Historical Structure Forms* for detailed instructions.

Site Name(s) (address if none) 7 Saragossa Street — Multiple Listing (DHR only) _____
Survey Project Name St. Augustine Historic Resource Survey Update — Survey # (DHR only) _____
National Register Category (please check one) ☒building ☐structure ☐district ☐site ☐object
Ownership: ☐private-profit ☐private-nonprofit ☒private-individual ☐private-nonspecific ☐city ☐county ☐state ☐federal ☐Native American ☐foreign ☐unknown

LOCATION & MAPPING

	Street Number	Direction	Street Name	Street Type	Suffix Direction
Address:	7		Saragossa	Street	

Cross Streets (nearest / between) _____
USGS 7.5 Map Name ST. AUGUSTINE — USGS Date 1992 — Plat or Other Map _____
City / Town (within 3 miles) St. Augustine — In City Limits? ☒yes ☐no ☐unknown — County St. Johns
Township 7N — Range 30E — Section 18 — ¼ section: ☐NW ☐SW ☐SE ☐NE — Irregular-name: _____
Tax Parcel # 2055200000 — Landgrant _____
Subdivision Name Model Land Company — Block _____ — Lot _____
UTM Coordinates: Zone ☐16 ☐17 Easting ☐☐☐☐☐☐ Northing ☐☐☐☐☐☐☐
Other Coordinates: X: _____ Y: _____ Coordinate System & Datum _____
Name of Public Tract (e.g., park) _____

HISTORY

Construction Year: 1924 ☐approximately ☐year listed or earlier ☐year listed or later
Original Use: Private Residence (House/Cottage/Ca — From (year): 1924 — To (year): 2020
Current Use: Private Residence (House/Cottage/Ca — From (year): 1924 — To (year): 2020
Other Use _____ — From (year): _____ — To (year): _____
Moves: ☐yes ☒no ☐unknown Date: _____ Original address _____
Alterations: ☒yes ☐no ☐unknown Date: _____ Nature: porch, siding
Additions: ☒yes ☐no ☐unknown Date: _____ Nature: rear, side
Architect (last name first): _____ Builder (last name first): _____
Ownership History (especially original owner, dates, profession, etc.)

Is the Resource Affected by a Local Preservation Ordinance? ☒yes ☐no ☐unknown Describe Demolition Review

DESCRIPTION

Style: Frame Vernacular — Exterior Plan: Square — Number of Stories: 2.5
Exterior Fabric(s): 1. Aluminum 2. Concrete block 3. _____
Roof Type(s): 1. Hip 2. _____ 3. _____
Roof Material(s): 1. Asphalt shingles 2. _____ 3. _____
Roof secondary strucs. (dormers etc.) 1. Hip dormer 2. hip extension
Windows (types, materials, etc.)

1/1 wood sash, single light fixed wood fixed 1/1 wood sash

Distinguishing Architectural Features (exterior or interior ornaments)

two story enclosed porch, aluminum siding, CMU porch, symmetrical fenestration, hip roof dormer

Ancillary Features / Outbuildings (record outbuildings, major landscape features; use continuation sheet if needed.)

paved walkway, gravel single car drive, minimal landscaping

DHR USE ONLY	OFFICIAL EVALUATION	DHR USE ONLY
NR List Date _____ ☐Owner Objection	SHPO – Appears to meet criteria for NR listing: ☐yes ☐no ☐insufficient info — Date _____ — Init. _____ KEEPER – Determined eligible: ☐yes ☐no — Date _____ NR Criteria for Evaluation: ☐a ☐b ☐c ☐d (see *National Register Bulletin 15*, p. 2)	

HISTORICAL STRUCTURE FORM

Site #8 SJ02089

DESCRIPTION (continued)

Chimney: No. 1 Chimney Material(s): 1. Brick 2. _____

Structural System(s): 1. Wood frame 2. _____ 3. _____

Foundation Type(s): 1. Continuous 2. _____

Foundation Material(s): 1. Concrete Block 2. _____

Main Entrance (stylistic details)

off center under second story porch, obscured by screen

Porch Descriptions (types, locations, roof types, etc.)

two story enclosed, CMU and concrete columns, poured concrete steps, wood and screen 1st story, second story enclosed with siding and windows, boxed eaves, metal railings

Condition (overall resource condition): ☐excellent ☐good ☒fair ☐deteriorated ☐ruinous

Narrative Description of Resource

This 1924 Frame Vernacular style building is 2.5 stories with Aluminum exterior and a Hip roof. It appears to be in fair condition.

Archaeological Remains _____ ☐Check if Archaeological Form Completed

RESEARCH METHODS (select all that apply)

☒FMSF record search (sites/surveys)	☒library research	☐building permits	☒Sanborn maps
☒FL State Archives/photo collection	☐city directory	☐occupant/owner interview	☒plat maps
☒property appraiser / tax records	☐newspaper files	☐neighbor interview	☐Public Lands Survey (DEP)
☒cultural resource survey (CRAS)	☒historic photos	☐interior inspection	☐HABS/HAER record search

☒other methods (describe) City Staff

Bibliographic References (give FMSF manuscript # if relevant, use continuation sheet if needed)

OPINION OF RESOURCE SIGNIFICANCE

Appears to meet the criteria for National Register listing individually? ☐yes ☒no ☐insufficient information

Appears to meet the criteria for National Register listing as part of a district? ☐yes ☒no ☐insufficient information

Explanation of Evaluation (required, whether significant or not; use separate sheet if needed)

No known significantant architectural associations or features; the buildings has had a loss of integrity due to alterations and additions. It would not contribute to a district.

Area(s) of Historical Significance (see *National Register Bulletin 15*, p. 8 for categories: e.g. "architecture", "ethnic heritage", "community planning & development", etc.)

1. _____ 3. _____ 5. _____

2. _____ 4. _____ 6. _____

DOCUMENTATION

Accessible Documentation Not Filed with the Site File - including field notes, analysis notes, photos, plans and other important documents

1) Document type _____ Maintaining organization _____
Document description _____ File or accession #'s _____

2) Document type _____ Maintaining organization _____
Document description _____ File or accession #'s _____

RECORDER INFORMATION

Recorder Name Patricia Davenport-Jacobs Affiliation Environmental Services, Inc.

Recorder Contact Information 7254 Financial Way, Suite 100, Jacksonville, FL 32256/9044702200/9044702112/:
(address / phone / fax / e-mail)

Required Attachments

❶ **USGS 7.5' MAP WITH STRUCTURE LOCATION CLEARLY INDICATED**

❷ **LARGE SCALE STREET, PLAT OR PARCEL MAP** (available from most property appraiser web sites)

❸ **PHOTO OF MAIN FACADE, DIGITAL IMAGE FILE**

When submitting an image, it must be included in digital AND hard copy format (plain paper grayscale acceptable). Digital image must be at least 1600 x 1200 pixels, 24-bit color, jpeg or tiff.

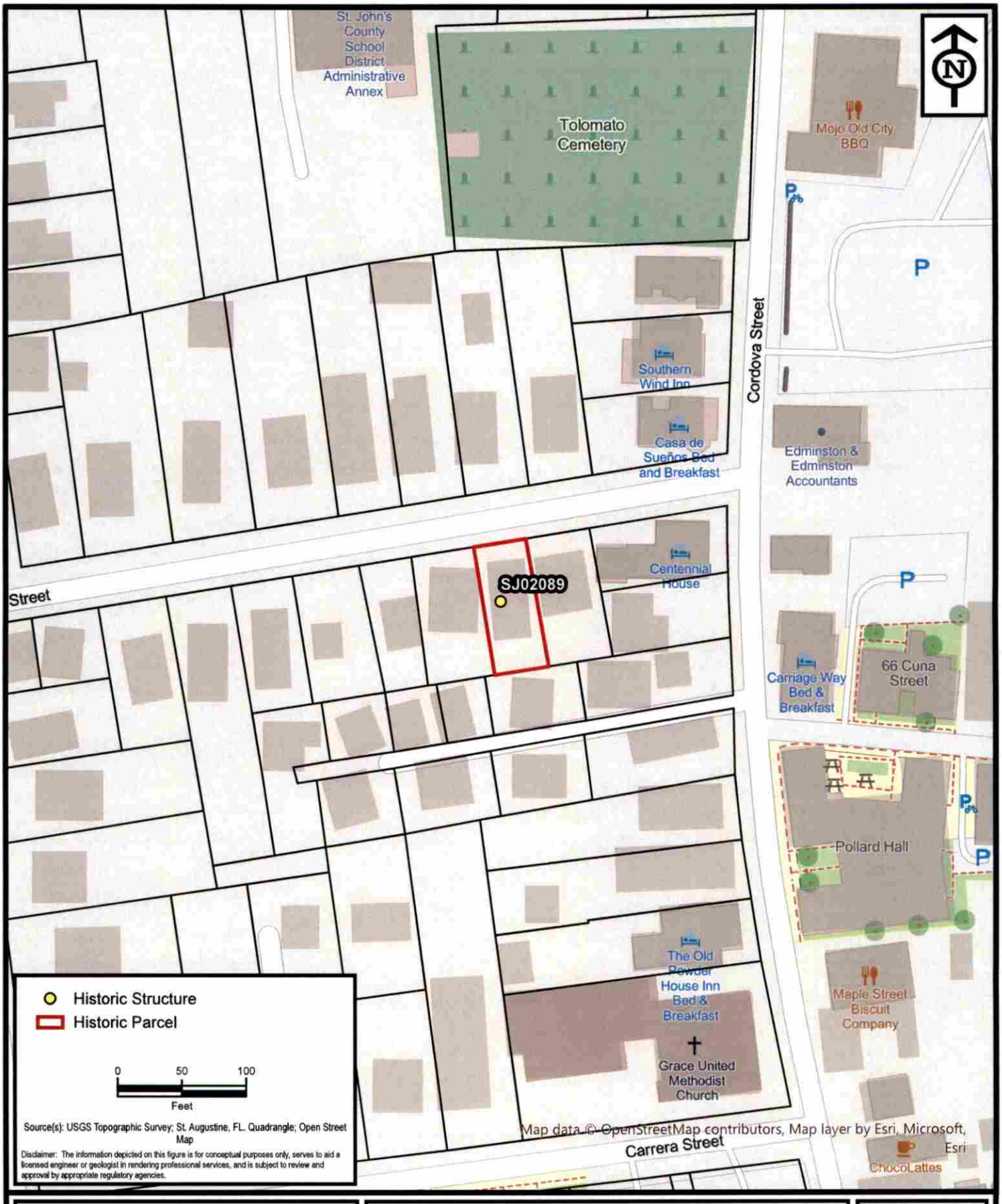

ENVIRONMENTAL SERVICES, INC.
A Terracon COMPANY
7220 FINANCIAL WAY, SUITE 100 JACKSONVILLE, FL 32256
PH. (904) 470-2200 FAX (904) 470-2112

Parcel Location - SJ02089

St. Augustine Historic Resource Mitigation & Survey Update

St. Johns County, Florida

Project No.	HK207093
Date	Dec 2020
Drawn By	AA
Checked By	JRN
Approved By	PDJ
Figure No.	**2**

Path: N:\GIS\Projects\2020\HK Jacksonville\HK207093_StAugResourceMitigation\Maps\HK207093_StAugResourceMitigation\HK207093_StAugResourceMitigation.aprx Date: 12/16/2020 12:25 PM

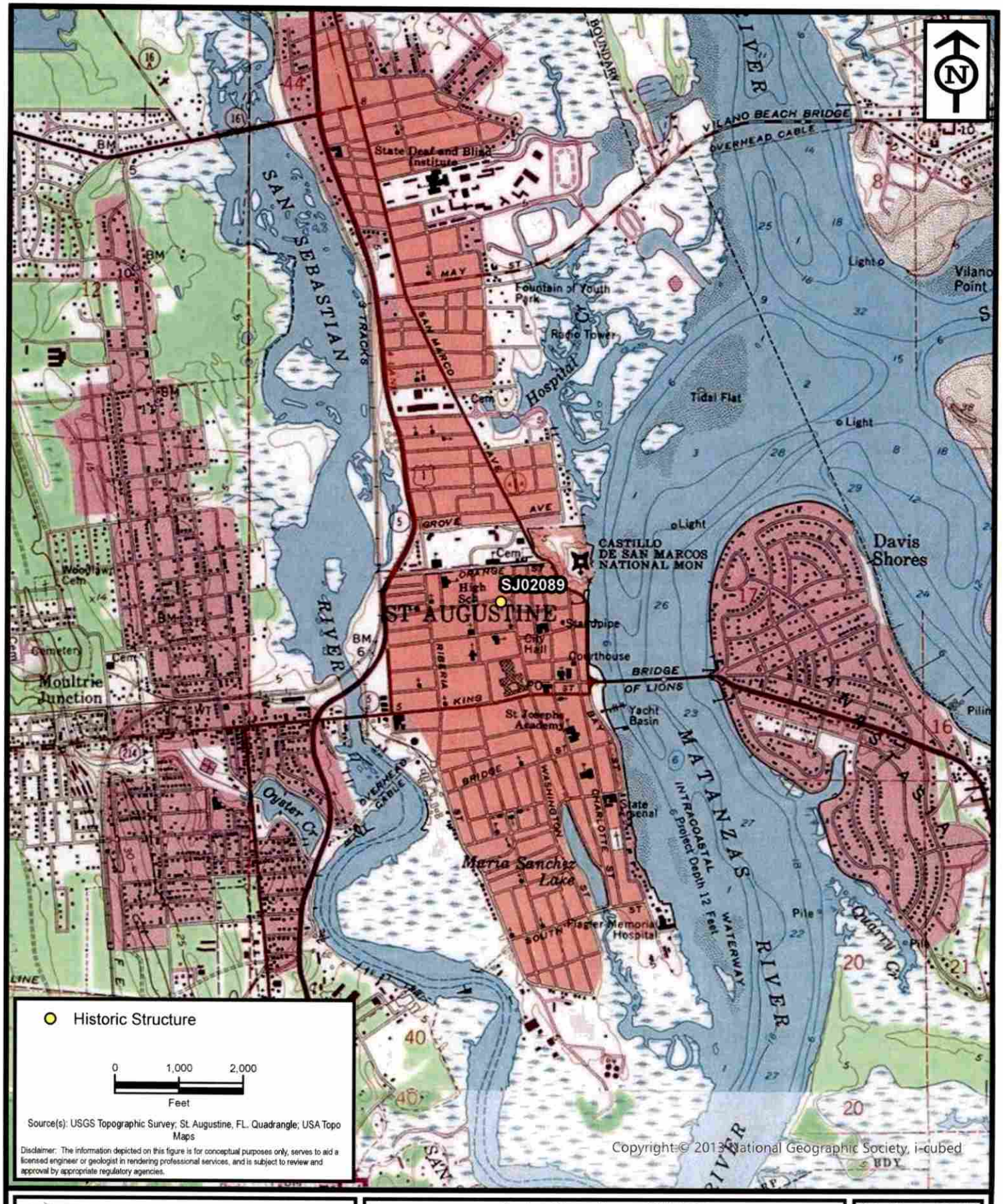

ENVIRONMENTAL SERVICES, INC.
A Terracon COMPANY
7220 FINANCIAL WAY, SUITE 100 JACKSONVILLE, FL 32256
PH. (904) 470-2200 FAX (904) 470-2112

Project Location - SJ02089

St. Augustine Historic Resource Mitigation & Survey Update

St. Johns County, Florida

Project No.	HK207093
Date	Dec 2020
Drawn By	AA
Checked By	JRN
Approved By	PDJ
Figure No.	1

Path: N:\GIS\Projects\2020\HK Jacksonville\HK207093_StAugResourceMitigation\Maps\HK207093_StAugResourceMitigation\HK207093_StAugResourceMitigation.aprx Date: 10/27/2020 3:13 PM

55

SANBORN MAPS
7 Saragossa Street

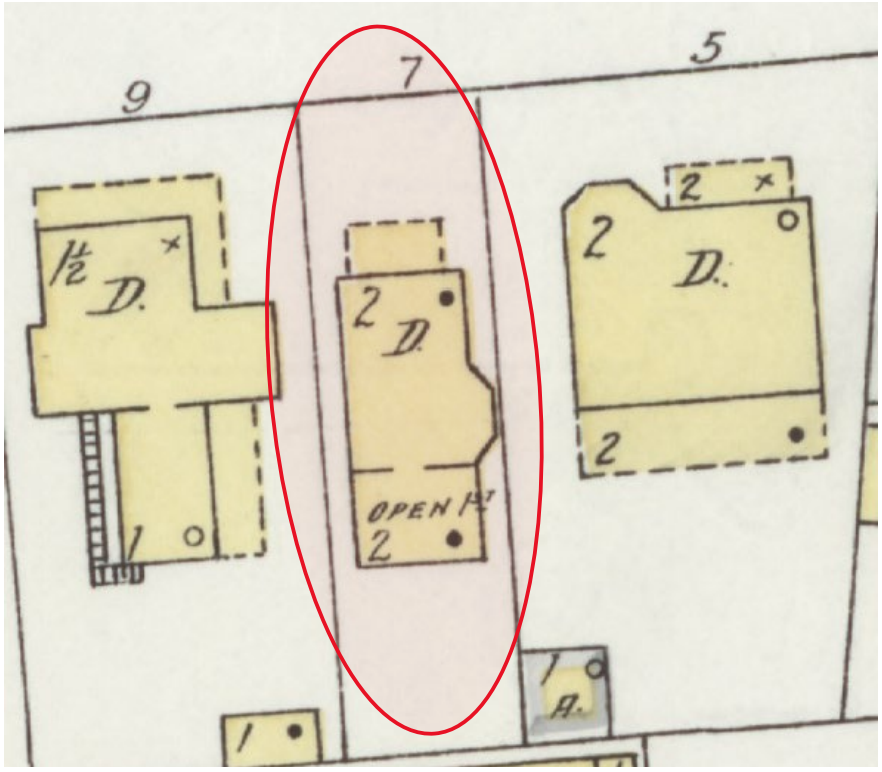

1924

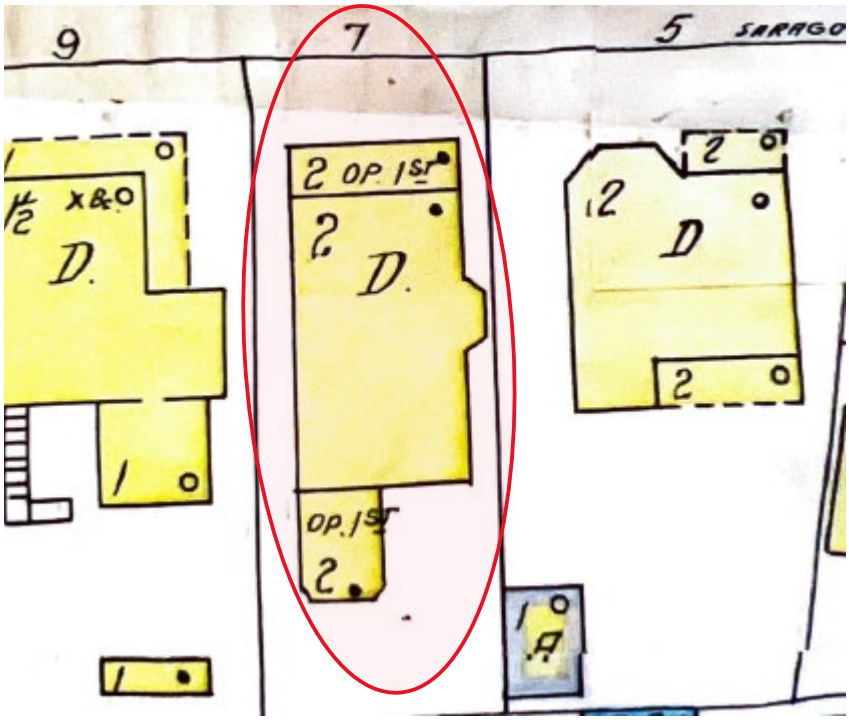

1930 Updated to 1960

BP - Renovation

CITY OF ST. AUGUSTINE
Planning & Building Department 75 King Street, St. Augustine, Florida 32084

PERMIT #: BP2025-0508

Contractor:	A&O BUILDERS LLC,
Owner:	TRUE REAL ESTATE INVESTMENTS LLC
Parcel:	2055200000
Project Address:	7 Saragossa St, Saint Augustine, FL, 32084
Proposed Work:	Remodeling - flooring, plumbing, drywall, painting, roof, & electric (FL10124-R29, FL4911-R17)
Job Cost:	$100,000.00
Permit Fees:	$1,591.31

Historic Preservation Condition	Only windows as indicated on plans as changing configuration are to be replaced. Window at northwest corner to remain and be enclosed form the interior.

ALL INSPECTIONS MUST BE SCHEDULED THROUGH THE CITY OF ST. AUGUSTINE'S PORTAL AT https://gis.citystaug.com/cosapermits/login

WARNING TO OWNER: YOUR FAILURE TO RECORD A NOTICE OF COMMENCEMENT MAY RESULT IN YOU PAYING TWICE FOR IMPROVEMENTS TO YOUR PROPERTY. A NOTICE OF COMMENCEMENT MUST BE RECORDED AND POSTED ON THE JOB SITE. IF YOU INTEND TO OBTAIN FINANCING, CONSULT WITH YOUR LENDER OR AN ATTORNEY BEFORE COMMENCING WORK OR RECORDING YOUR NOTICE OF COMMENCEMENT.

STAFF USE ONLY

AUTHORIZED SIGNATURE Shelley Clayton **DATE ISSUED** June 25, 2025

7 Saragossa St, Saint Augustine, FL, 32084

Date: 04/26/2025

Contractor: **AO Builders Contractors**

Owner: TRUE real estate investments

Scope of Work

Exterior

- Powerwash entire house and shed.
- Paint house exterior 2-tone (main and trim).
- Replace the front entry area with new siding and match exterior.
- Install and clean gutters as needed.
- Replace the front door entrance.
- Clean up trash around property.

Interior (All Areas)

- Paint Interior (white ceiling, semi-gloss trim)
- Complete any necessary repairs.
- Install all new light fixtures, ceiling fans, smoke detectors, and blinds.
- Remove existing flooring and install new LVP flooring.
- Level floors as needed.
- Install all new plumbing and bathroom hardware/fixtures.

Kitchen & Dining

- Install new white cabinets and create an island.
- Install pendant lights above island.
- Install new granite or quartz countertops.
- Install new sink, faucet and GFCI outlets.
- Install base cabinets (color white).
- Remove attic fan, patch and retexture ceiling.
- Replace ceiling paneling.
- Install LVP and plumbing hookups

Bathrooms

- New bathtub, plumbing fixtures, vanity, mirror, faucet, toilet, light fixtures.
- Install tile to ceiling in bathtub area.
- Install accessories and exhaust fan.
- Install GFCI in both bathrooms.

General Exclusions

1. Structural Issues – Exclude responsibility for any unforeseen structural deficiencies (e.g., termite damage, rotted framing, or foundation issues) that may require additional work.

2. Hidden Conditions – Exclude costs for repairs due to hidden conditions, such as mold, asbestos, lead paint, or faulty wiring/plumbing discovered after demolition.

3. Permit Fees & Inspections – Permit Fees & Inspections for electrical, HVAC and plumbing to be paid by contractor and using a third party engineer.

4. Existing Code Violations – Exclude any responsibility for rectifying code violations that were not caused by your work.

5. Weather Delays – Exclude liability for delays caused by weather conditions beyond our control due to the exterior of the house.

6. Supply Chain Delays – Exclude responsibility for delays due to material shortages or back-ordered items.

7. Owner-Provided Materials & Appliances – If the owner is supplying materials or appliances (as mentioned in the job scope), exclude responsibility for their quality, fitment, or defects.

Approved

These plans have been reviewed and found to be in substantial compliance with the provisions of the 2020 Florida Building Code and the City of St. Augustine building ordinances. Any deviations or revisions to these plans must be approved by the City of St. Augustine Building Official.

Richard "Buddy" Schauland 05/19/2025

APPROVED

This work has been reviewed and found consistent with the AGHP, with conditions as detailed on the permit.

Candice Seymour, Historic Preservation Planner

06/13/2025

PROPOSED LAYOUT

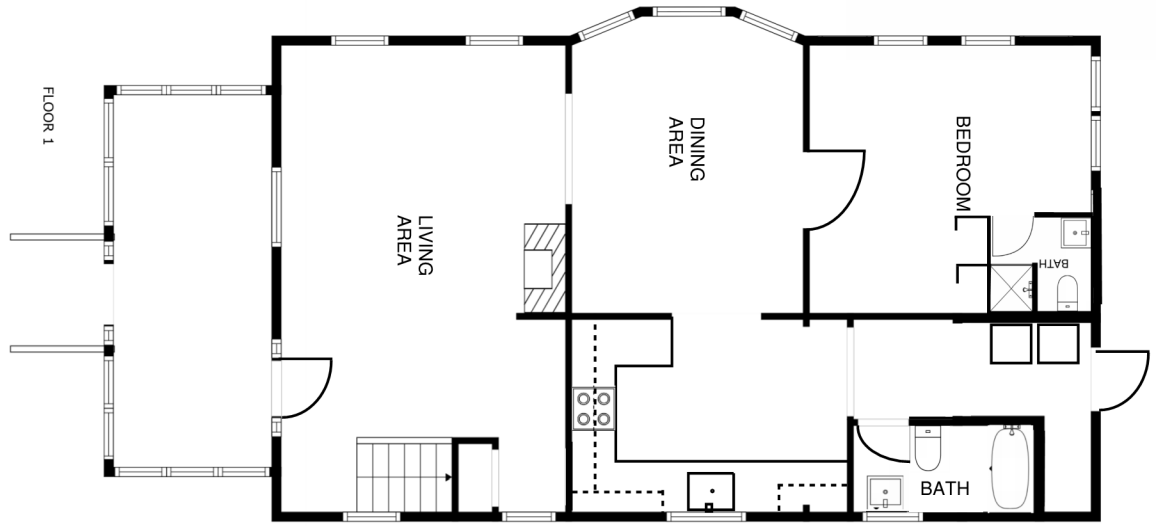

FLOOR 1

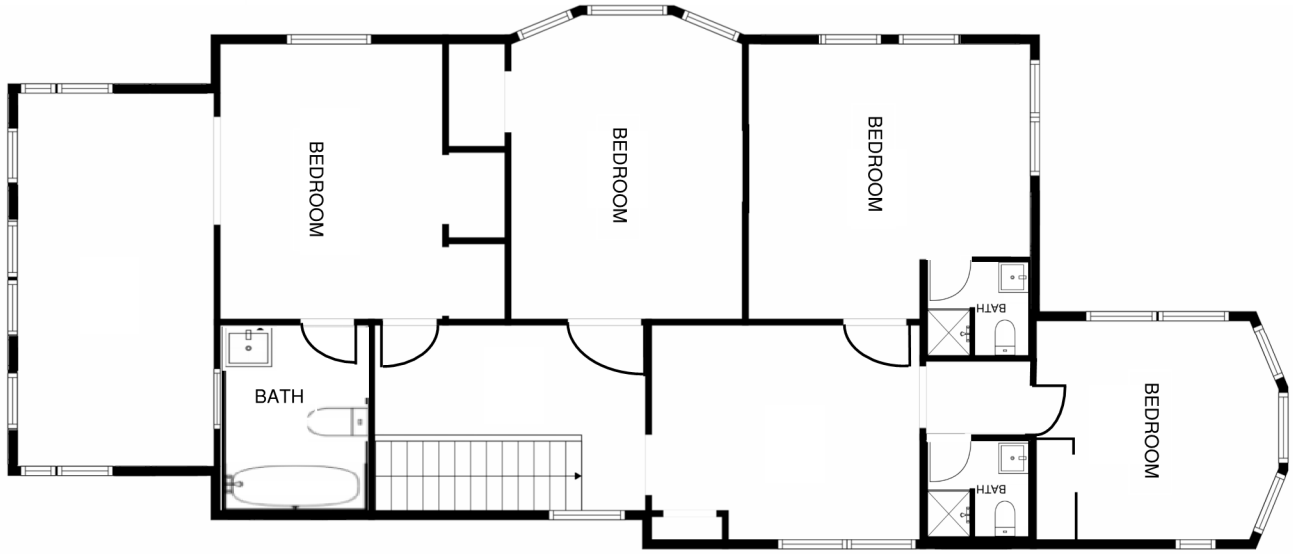

FLOOR 2

EXISTING LAYOUT

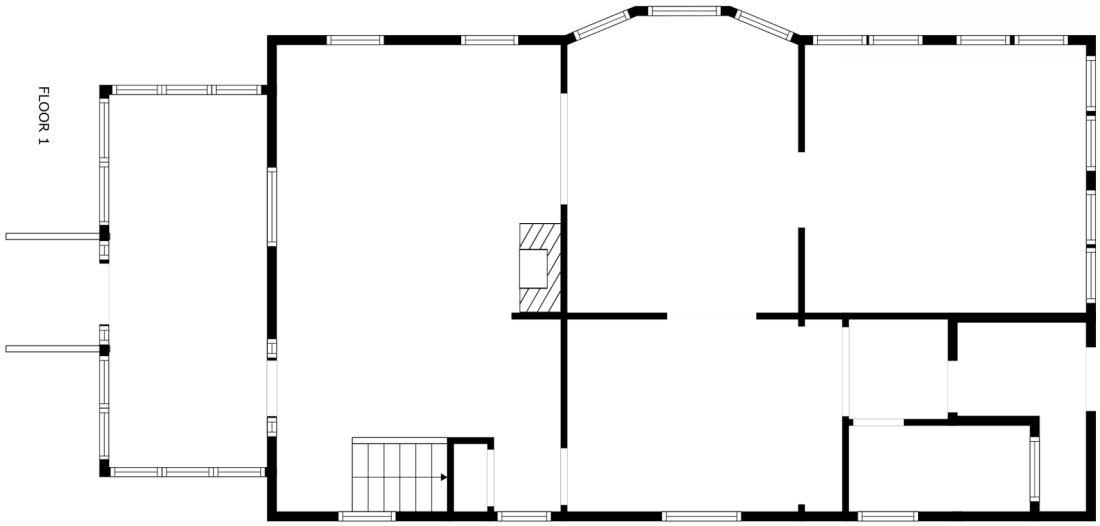

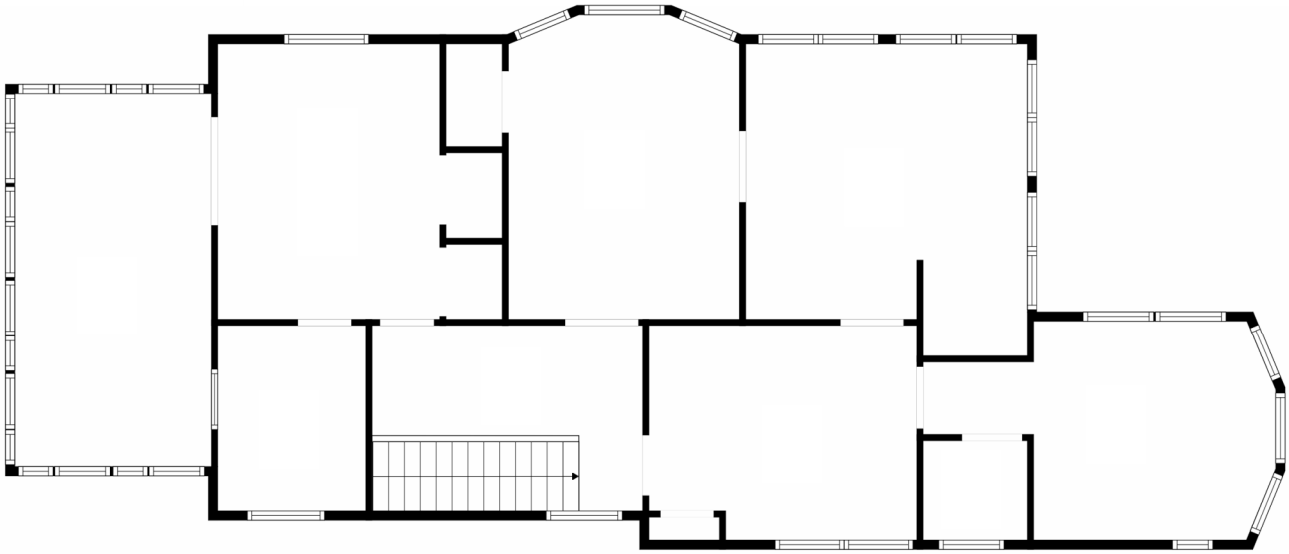

Comments By: Candice Seymour, Historic Preservation Planner
cseymour@citystaug.com / (904) 209-4326

APPROVED
This work has been reviewed and found consistent with the AGHP, with conditions as detailed on the permit.
Candice Seymour, Historic Preservation Planner
06/13/2025

There is still a lack of clarification regarding window alterations. No FL Product Approval number or manufacturers specifications have been provided for the replacement windows. These should include details regarding material, type, as well as the section drawings provided by the manufacturer specific to the replacement window.

Plans should be updated to indicate retention of the window on the northwest corner that will be enclosed from the inside but retained on the exterior.

Response: Thank you for your comments Candice.

- See attached FL product approval for the windows replacement.

Search Results - Applications

FL#	Type	Manufacturer	Validated By	Status
FL20743-R3 History	Affirmation	TAFCO **Category:** Windows **Subcategory:** Horizontal Slider	Scott Wolters, PE (561) 225-1982	Approved

- See attached location of the window that will be enclosed from inside but remain from outside and manufacturer specification for windows replacement.

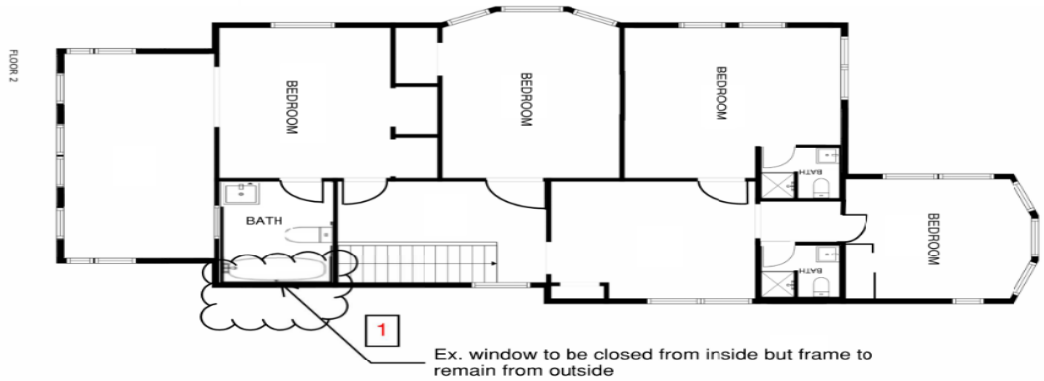

DATE	REVISION
06/10/25	WINDOW TO REMIAN

Utility Window Installation Instructions

Vinyl Mounting Flange (Nailing Fin) Window

ROUGH OPENING PREPARATION

- Rough opening should be sized one-half inch (1/2") larger than the window size in width and height. Provide a minimum of one-quarter inch (1/4") clearance at the top (head) and one-eighth inch (1/8") clearance on each side (jamb) of the unit. Improperly sized rough openings will not allow the window to function as was intended.

WINDOW INSTALLATION

- Immediately set t he window centered in the rough opening and compress the sealant against the wall.

- Select and apply shims as necessary. The proper number and position of shims is important. Position shims where support is needed but do not over, or under, shim as either can cause distortion of the window frame. If shims are needed at the sill, use continuous support across the entire bottom (sill) of the window to prevent any warping, sagging or crowning.

- Fasten (tack) upper corner on the side (jamb), not the top (head), in place through the mounting flange (nailing fin) three inches (3") from the corner using an appropriate fastener that will penetrate the stud one inch (1"). DO NOT DRIVE THE FASTENER ALL THE WAY IN.

- Adjust the shims and check the window for level, plumb and true.

- Make sure the window is square, operates smoothly, the operable sash is square in its opening and the latches are able to engage.

- Fasten (tack) the corner diagonally opposite the upper corner that was tacked first on the side (jamb), not the bottom (sill), in place through the mounting flange (nailing fin) three inches (3") from the corner using an appropriate fastener that will penetrate the stud one inch (1"). DO NOT DRIVE THE FASTENER ALL THE WAY IN.

WINDOW PREPARATION

- The operable sash of the window must remain closed and locked during the entire installation process.

- Apply a three-eights inch (3/8") nominal continuous bead of sealant to the interior perimeter of the mounting flange (nailing fin) in line with the pre-punched holes and along the seams of all joints at the corners. It is important to properly select and apply sealant.

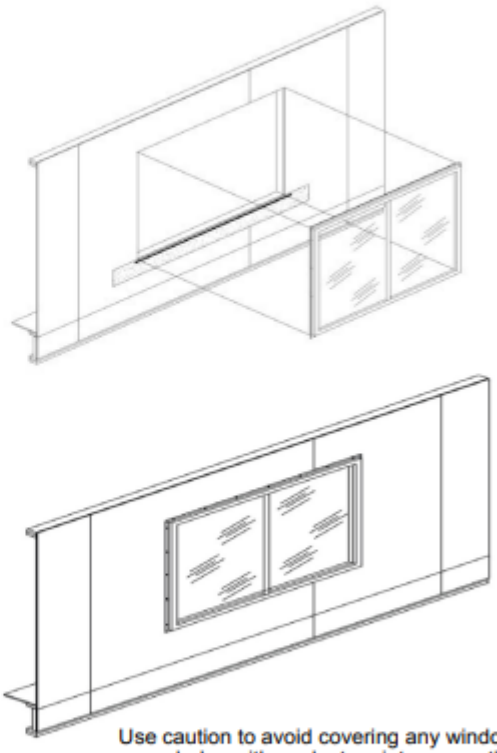

Use caution to avoid covering any window weep holes with sealant, paint or any other obstructive material

CLEANING THE WINDOW

- Start cleaning the window by removing any visible residue. Clean and clear all excess building materials, such as plaster, cement, soil, paint and excess caulk/sealant, from the window to ensure proper functioning. A vacuum cleaner should be used to remove loose debris and drywall dust from the window track and interlock.

- Inspect and clean all weepholes to ensur e proper drainage of the window.

- A mild detergent cleaner can be used along with a soft sponge to gently scrub the surface of the window, if soil still adheres. Mild detergent deemed safe for bare hands should be safe to use on vinyl windows. ABRASIVE PADS SHOULD NOT BE USED TO CLEAN FINISHED SURFACES

CITY OF ST. AUGUSTINE
HISTORIC ARCHITECTURAL REVIEW BOARD APPLICATION

Certificate of Demolition (Partial)

Case Number: HP2025-0087 **Meeting Date: Thursday, January 15, 2026**

1. NAME OF APPLICANT: Ermal Alija
   Business (if applicable):
   Address: 70 Caiden Dr
   City: Ponte Vedra State: FL Zip Code: 32081
   Daytime Telephone: Available Upon Request E-Mail Address: Available Upon Request

2. NAME OF PROPERTY OWNER: True Real Estate Investments LLCs
   Business (if applicable):
   Address: 7 Saragossa st
   City: St Augustine Daytime State: FL Zip Code: 32081
   Telephone: Available Upon Request E-Mail Address: Available Upon Request

3. PROJECT LOCATION: 7 SARAGOSSA ST, Saint Augustine, FL, 32084

4. LEGAL DESCRIPTION: MODEL LAND CO SUBD CITY LOT 16-B BLK K OR479/464 BY WILL OR6103/285 & 1462

5. SCOPE OF WORK: for partial demolition of a residential building, constructed c. 1917-1924, that is recorded in the Florida Master Site File and contributing to the Model Land Company National Register Historic District, to include after-the-fact wholesale replacement of windows with a different material and design and fenestration changes.

Information attached by applicant includes:

- Application Agreement
- Window Condition Assessment
- Additional Information
- Photographs of Existing Conditions
- Proposed Replacement Building/Feature Drawings

Received December 29, 2025
Planning and Building Dept.

HARB APPLICATION AGREEMENT

In filling out this application:

- **I understand that it becomes part of the Public Record of the City of St. Augustine and hereby certify that all information contained herein is accurate to the best of my knowledge.**
- **I further understand that if this application is for an *Opinion of Appropriateness*, I must still obtain a *Certificate of Appropriateness* before applicable permits can be issued for project work to begin. If this application is for a *Certificate of Appropriateness, Demolition*, or *Partial Demolition*, and it is approved, I am required to obtain other development approvals, archaeological review, and a building permit as necessary prior to starting project work.**
- **Once a hearing date has been set and a legal notice has been published or posted, I, or an authorized representative, must be prepared to present the request at the scheduled hearing date. The cost of subsequent hearings requiring re-noticing due to continuance will be assessed to the applicant.**
- **I have been made aware that applications must be sufficiently complete at the time of submittal or may be delayed to a future meeting. Relevant information necessary for application review shall include but not be limited to the items referenced in the "Plan Requirements" section of the Architectural Guidelines for Historic Preservation (AGHP) depending on the scope and scale of the project. The minimum application requirements are marked as required submittal documents in this online application. Contact Planning Staff if the project is unique and needs to be addressed in a different manner. Minor details may be submitted in the portal up to 10 days before the meeting and HARB will determine if additional materials may be presented at the meeting.**

All applicants/owners of record must sign the application agreement. If the property applicant/owner is a governmental agency; licensed business or company; incorporated organization; or an administered estate, an authorized agent may sign. If the applicant is different than the property owner, the application must be signed by both parties. An Authorization Form signed by the property owner(s) and notarized, must be submitted only in the absence of the property owner's signature or where an authorized agent signs in lieu of the property owner.

Project Address: 7 Saragossa St, Saint Augustine, FL, 32084

Applicant's Name: Ermal Aliaj Applicant's Signature: Ermal Aliaj

Owner's Name: CORY HUTCHERSON Owner's Signature: _____

Owner's Name: _____ Owner's Signature: _____

Owner's Name: _____ Owner's Signature: _____

(Can add additional signature page if needed)

Florida Statute 286.0105 states that a person appealing any decision by this board at any meeting regarding this application may need a verbatim record of the proceedings which includes testimony and evidence upon which the appeal is to be based.

Property Address: 7 Saragossa Street, St Augustine 32084 **Assessment Date:** 12/16/25
Applicant Name: A & O Builders Contractors **Assessed by:** Window Assessment FormFor Historic Preservation Division - Planning & Building Department/Hist

Window Assessment Form

For Historic Preservation Division - Planning & Building Department/ Historic Architectural Review Board Review

Submitted	Basic Requirements for Review
☑	1. Photographs or drawing of each overall elevation (side) of the exterior, with all the window openings on each elevation numbered.
☑	2. Photographs of each window opening *numbered* corresponding to submittal under #1.
☑	3. Condition Evaluation of each window (see page 2).
☑	4. Proposed window design (casement, fixed, etc.), pattern (3/1, 6/6, 1/1, etc.) , materials (wood, vinyl, clad, etc.), size, etc. If different for certain openings, specify these details for each kind.
☑	5. Proposed window product brochure/information that includes the company's depiction or photograph (not installation or wind load information sheets) of actual windows. We need to know what they look like on the exterior.
☐	6. Elevation drawings that show proposed alterations to window openings (if applicable)
☑	7. Photos detailing window frame and face and side of trim
☐	May include additional documentation as needed for your report: Other _____

ALL* window openings** on the structure should be assigned a ***number and ***described*** under the same number on page 2 of this sheet, and **a numbered photo of each** provided. Even windows not being replaced should be assigned a number. Please note which windows are not being proposed for replacement by its corresponding window number on the second page.

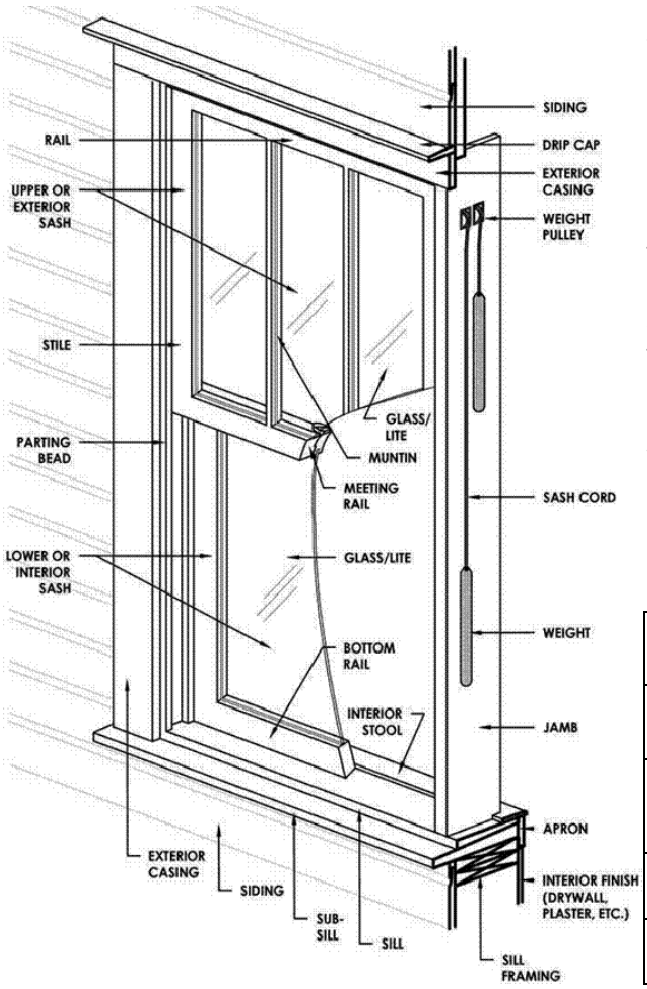

Windows in ***pairs*** *or* ***groupings*** should be assigned **separate** numbers. Windows in dormers and small fixed windows *should* also be included. Denote if numbered windows are door sidelights or transoms associated with a door.

For each window numbered on page 2, describe the window type, material, and include the different issues/ conditions of *each* in detail, referring to the specific parts of the window (see diagram to the left).

Photographs should be provided of each overall elevation/side of the building and each overall window from the exterior. Interior views of windows may also be provided. *Additional close-up photographs*, showing visible evidence of the window's condition, **MUST** be provided to better document problem areas. **Photos should be numbered and labeled.**

The review and recommendation is based on deterioration or damage to the window unit and associated trim. Broken glass or windows that are painted shut are not necessarily grounds for approving replacement.

Depending on the significance of the building and the existing windows, additional information may be required to prove that the windows need to be replaced and that the proposed windows are compatible.

Total Number of Window Openings on the Structure	
Number of Historic Windows on the Structure	
Number of Existing Replacement/Non-Historic Windows	
Number of Windows Completely Missing	
Total Number of Windows to be Replaced	

Property Address: 7 Saragossa Street, St Augustine 32084
Applicant Name: A & O Builders Contractors

Assessment Date: 12/16/25
Assessed by: Window Assessment FormFor Historic Preservation Division - Planning & Building Department/Historic Architectu

Window Assessment - Window Condition Report

Window #	List and Describe Window Condition
1	Window is broken with active water intrusion. Frame shows moisture damage and the latch is non-functional.
2	Broken, leaking with water intrusion and failed latch
3	Window panel is broken with water intrusion, failed latch
4	Water intrusion, and the frame shows significant detirioration
5	Water intrusion, and the frame shows significant detirioration
6	Water intrusion, and the frame shows significant detirioration
7	Water intrusion, and the frame shows significant detirioration
8	Window unit was missing and the opening was framed in
9	Window unit was missing and the opening was framed in
10	Window unit was missing and the opening was framed in
11	Window unit was missing and the opening was framed in
12	Window is broken with active water intrusion. Frame shows moisture damage and the latch is non-functional.
13	Window is broken with active water intrusion. Frame shows moisture damage and the latch is non-functional.
14	Window is broken with active water intrusion. Frame shows moisture damage and the latch is non-functional.
15	Only the screen remains; glass was not present and the frame is in poor condition due to water intrusion.
16	Only the screen remains; glass was not present and the frame is in poor condition due to water intrusion.
17	Frame in bad condition, leaking with water intrusion and failed latch
18	Broken, leaking with water intrusion and failed latch
19	Broken, leaking with water intrusion and failed latch
20	From outside in good shape and with failed latch

Window #	List and Describe Window Condition
21	In rough shape with some windows that had broken glass, water intrusion. Latch inoperable and nonrecoverable.
22	In rough shape with some windows that had broken glass, water intrusion. Latch inoperable and nonrecoverable.
23	In rough shape with some windows that had broken glass, water intrusion. Latch inoperable and nonrecoverable.
24	In rough shape with some windows that had broken glass, water intrusion. Latch inoperable and nonrecoverable.
25	In rough shape with some windows that had broken glass, water intrusion. Latch inoperable and nonrecoverable.
26	In rough shape with some windows that had broken glass, water intrusion. Latch inoperable and nonrecoverable.
27	In rough shape with some windows that had broken glass, water intrusion. Latch inoperable and nonrecoverable.
28	
29	
30	
31	
32	
33	
34	
35	
36	
37	
38	
39	
40	

1 2 3

4 5

6 7 8-11

12 13 14

15 16

17

19

18

21-27
Second floor
windows from inside

20

Second floor windows from outside

EXISTING LAYOUT

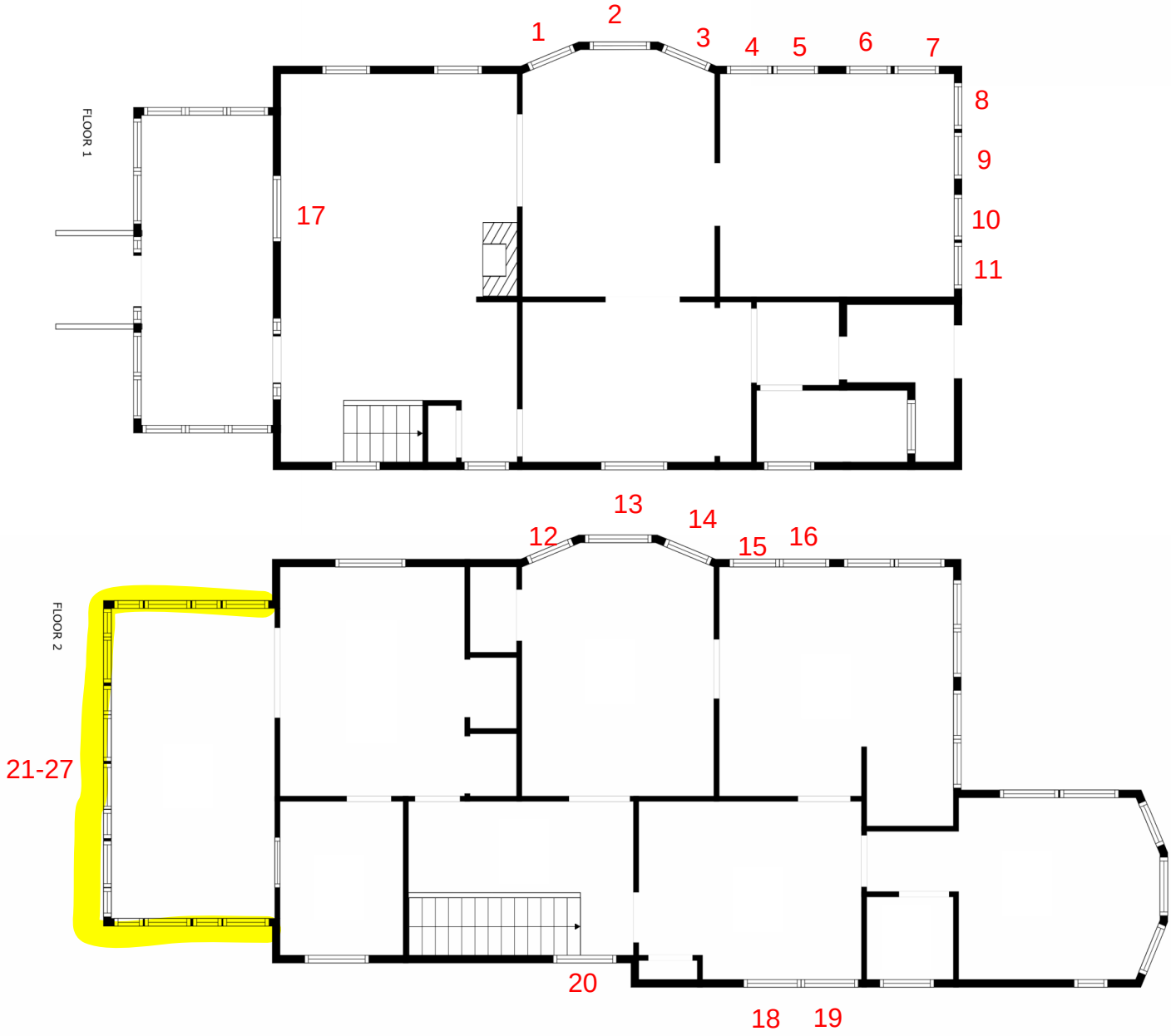

Note: Some windows are missing and we will try to add them for review. I apologize for the inconvenience.

Window Replacement Justification Letter

The existing windows throughout the structure are in severely deteriorated condition and require full replacement. Multiple window units exhibit shattered or missing glass, leaving only screens in place. Several openings have no window assembly at all and are currently framed out or exposed to the exterior. These conditions eliminate the window's ability to provide proper protection, insulation, and security.

In addition, many frames show significant water intrusion, resulting in decay, warping, and visible moisture damage. The affected areas indicate long-term exposure and loss of structural integrity. The presence of water intrusion also creates potential for mold growth and continued damage to adjacent wall components if not corrected.

The condition of the operating components further supports replacement. Several window latches are non-functional or missing, and the remaining operable units do not properly seal or lock. This represents both a safety and weatherproofing concern. The combination of leaking glass assemblies, warped frames, and failed hardware prevents the windows from performing to acceptable standards.

In our opinion, due to the extent of visible damage, the level of deterioration, missing assembly components, and the compromised weather-resistance of the building envelope, repair is not a practical or reliable option.

Existing conditions of the installed windows

Proposed windows with
wood triming

AMERICAN CRAFTSMAN WINDOWS
SILVER LINE WINDOWS AND DOORS

70 SERIES/V3 SERIES/(5800)
GLIDING PATIO DOORS
(NON-HVHZ)(IMPACT)

GENERAL NOTES:

1. THE PRODUCT SHOWN HEREIN IS DESIGNED AND MANUFACTURED TO COMPLY WITH THE CURRENT EDITION FLORIDA BUILDING CODE (FBC), EXCLUDING HVHZ AND HAS BEEN EVALUATED ACCORDING TO THE FOLLOWING:
   - AAMA/WDMA/CSA 101/I.S.2/A440-11
   - ASTM E1886-12
   - ASTM E1996-17
2. ADEQUACY OF THE EXISTING STRUCTURAL CONCRETE/MASONRY, 2X FRAMING, AND METAL FRAMING AS A MAIN WIND FORCE RESISTING SYSTEM CAPABLE OF WITHSTANDING AND TRANSFERRING APPLIED PRODUCT LOADS TO THE FOUNDATION IS THE RESPONSIBILITY OF THE ENGINEER OR ARCHITECT OF RECORD FOR THE PROJECT OF INSTALLATION.
3. 1X AND 2X BUCKS (WHEN USED) SHALL BE DESIGNED AND ANCHORED TO PROPERLY TRANSFER ALL LOADS TO THE STRUCTURE. BUCK DESIGN AND INSTALLATION IS THE RESPONSIBILITY OF THE ENGINEER OR ARCHITECT OF RECORD FOR THE PROJECT OF INSTALLATION.
4. THE INSTALLATION DETAILS DESCRIBED HEREIN ARE GENERIC AND MAY NOT REFLECT ACTUAL CONDITIONS FOR A SPECIFIC SITE. IF SITE CONDITIONS CAUSE INSTALLATION TO DEVIATE FROM THE REQUIREMENTS DETAILED HEREIN, A LICENSED ENGINEER OR ARCHITECT SHALL PREPARE SITE SPECIFIC DOCUMENTS FOR USE WITH THIS DOCUMENT IN NON-HVHZ AREAS. IN HVHZ AREAS, ONE TIME PRODUCT APPROVAL TO BE OBTAINED FROM MIAMI-DADE RER OR AHJ.
5. APPROVED IMPACT PROTECTIVE SYSTEM **IS NOT REQUIRED** ON THIS PRODUCT IN AREAS REQUIRING IMPACT RESISTANCE.
6. WINDOW FRAME MATERIAL: PVC
7. GLASS MEETS THE REQUIREMENTS OF ASTM E 1300 GLASS CHARTS. SEE SHEET 1 FOR GLAZING DETAILS.

DESIGN PRESSURE TABLE

SIZE	CONFIGURATION	DESIGN PRESSURE	MISSILE IMPACT RATING
95.5" X 81.5"	XO	+50/-50 PSF	MISSILE SIZE D WIND ZONE 3

TABLE OF CONTENTS

SHEET	REVISION	SHEET DESCRIPTION
1	-	GENERAL NOTES & GLAZING DETAILS
2	-	ELEVATIONS & ANCHOR LAYOUTS
3	-	VERTICAL SECTIONS
4	-	HORIZONTAL SECTIONS
5	-	INSTALLATION NOTES & ANCHOR DETAILS & SCHEDULE

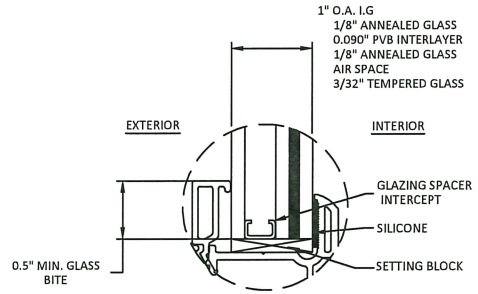

GLAZING DETAIL

GLAZING NOTE:
- GLASS THICKNESS AND TYPE SHALL COMPLY WITH ASTM E-1300 GLASS CHARTS REQUIREMENT

AMERICAN CRAFTSMAN WINDOWS
SILVER LINE WINDOWS AND DOORS

ONE SILVERLINE DRIVE
NORTH BRUNSWICK, NJ 08902
PH: (888)-741-0357

TITLE: *70 SERIES/V3 SERIES/(5800) GLIDING PATIO DOORS (NON-HVHZ)(IMPACT)*

GENERAL NOTES & GLAZING DETAILS

PREPARED BY:
BUILDING DROPS, INC.
398 E. DANIA BEACH BLVD., STE. 338
DANIA BEACH, FL 33004
PH: (954)399-8478
FAX: (954)744.4738
WEB: www.buildingdrops.com

REMARKS	BY	DATE
6TH FBC EDITION	FM	10/17
7TH FBC EDITION	LH	10/20

THE INSTALLATION DETAILS DESCRIBED HEREIN ARE GENERIC AND MAY NOT REFLECT ACTUAL CONDITIONS FOR A SPECIFIC SITE. IF SITE CONDITIONS CAUSE INSTALLATION TO DEVIATE FROM THE REQUIREMENTS DETAILED HEREIN, A LICENSED ENGINEER OR ARCHITECT SHALL PREPARE SITE SPECIFIC DOCUMENTS FOR USE WITH THIS DOCUMENT.

Digitally signed by Hermes F Norero
Reason: I am approving this document
Date: 2020.10.26 11:21:23 +02'00'

HERMES F. NORERO
LICENSE No. 73778
STATE OF FLORIDA
PROFESSIONAL ENGINEER

HERMES F. NORERO P.E.
FLORIDA P.E. No. 73778
BUILDING DROPS, INC.
398 E. DANIA BEACH BLVD. # 338
DANIA BEACH, FL 33004
FBPE CERT. OF AUTHORIZATION No. 29578

FL #: FL 14998

DATE: 09.28.17

DWG. BY: CL | CHK. BY: HFN

SCALE: NTS

DWG. #: SWD039

SHEET: 1 OF 5

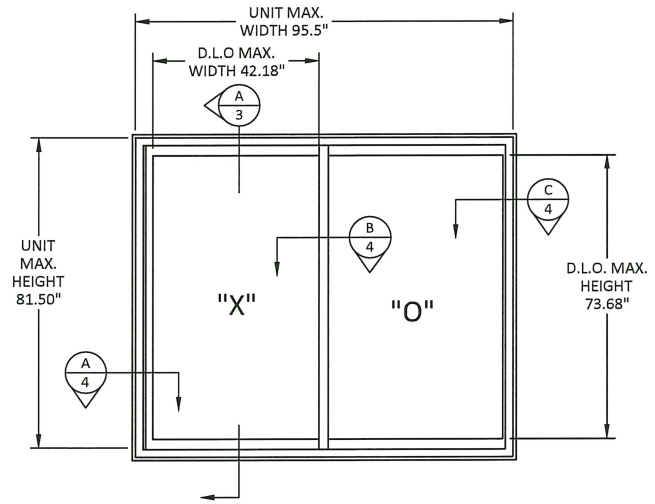

ELEVATION

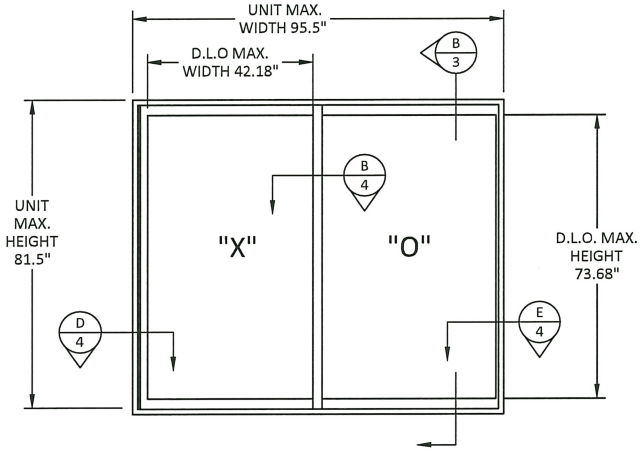

ELEVATION

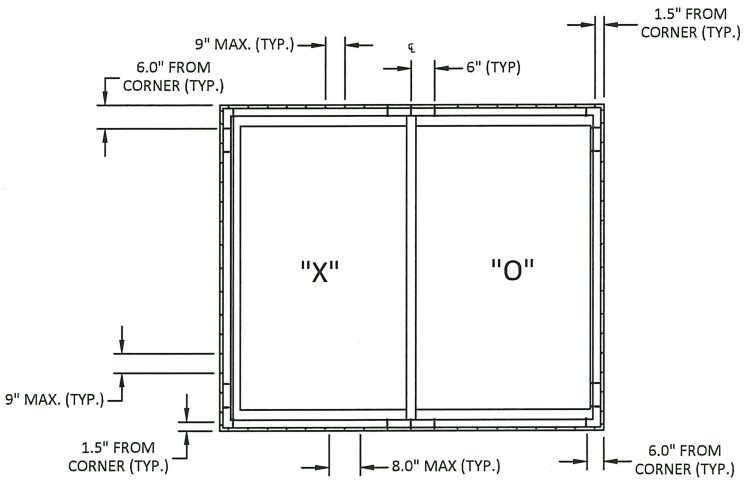

ANCHOR LAYOUT
NAIL FIN

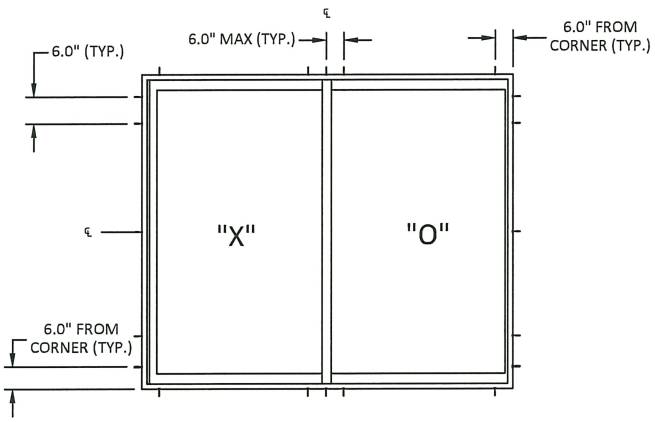

ANCHOR LAYOUT
THROUGH FRAME

AMERICAN CRAFTSMAN WINDOWS
SILVER LINE WINDOWS AND DOORS

ONE SILVERLINE DRIVE
NORTH BRUNSWICK, NJ 08902
PH: (888)-741-0357

TITLE: *70 SERIES/V3 SERIES/(5800) GLIDING PATIO DOORS (NON-HVHZ)(IMPACT)*

GENERAL NOTES & GLAZING DETAILS

PREPARED BY:
BUILDING DROPS, INC.
398 E. DANIA BEACH BLVD. STE. 338
DANIA BEACH, FL 33004
PH: (954)399-8478
FAX: (954)744.4738
WEB: www.buildingdrops.com

REMARKS	BY	DATE
6TH FBC EDITION	FM	10/17
7TH FBC EDITION	LH	10/20

THE INSTALLATION DETAILS DESCRIBED HEREIN ARE GENERIC AND MAY NOT REFLECT ACTUAL CONDITIONS FOR A SPECIFIC SITE. IF SITE CONDITIONS CAUSE INSTALLATION TO DEVIATE FROM THE REQUIREMENTS DETAILED HEREIN, A LICENSED ENGINEER OR ARCHITECT SHALL PREPARE SITE SPECIFIC DOCUMENTS FOR USE WITH THIS DOCUMENT.

HERMES F. NORERO, P.E.
FLORIDA P.E. No. 73778
BUILDING DROPS, INC.
398 E. DANIA BEACH BLVD. # 338
DANIA BEACH, FL 33004
FBPE CERT. OF AUTHORIZATION No. 29578

FL #: FL 14998

DATE: 09.28.17

DWG. BY: CL | CHK. BY: HFN

SCALE: NTS

DWG. #: SWD039

SHEET: 2 OF 5

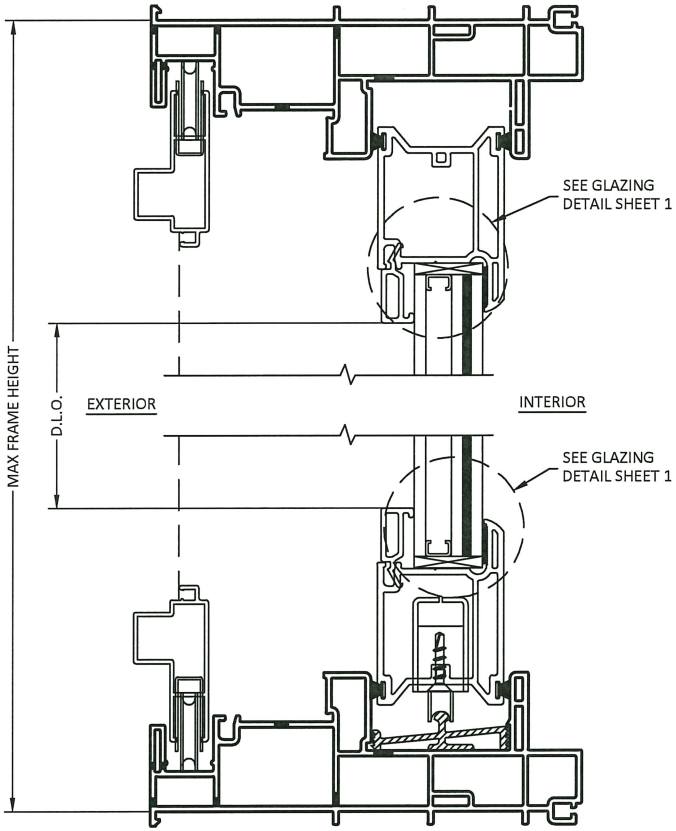

A/3 **VERTICAL SECTION**
THROUGH FRAME

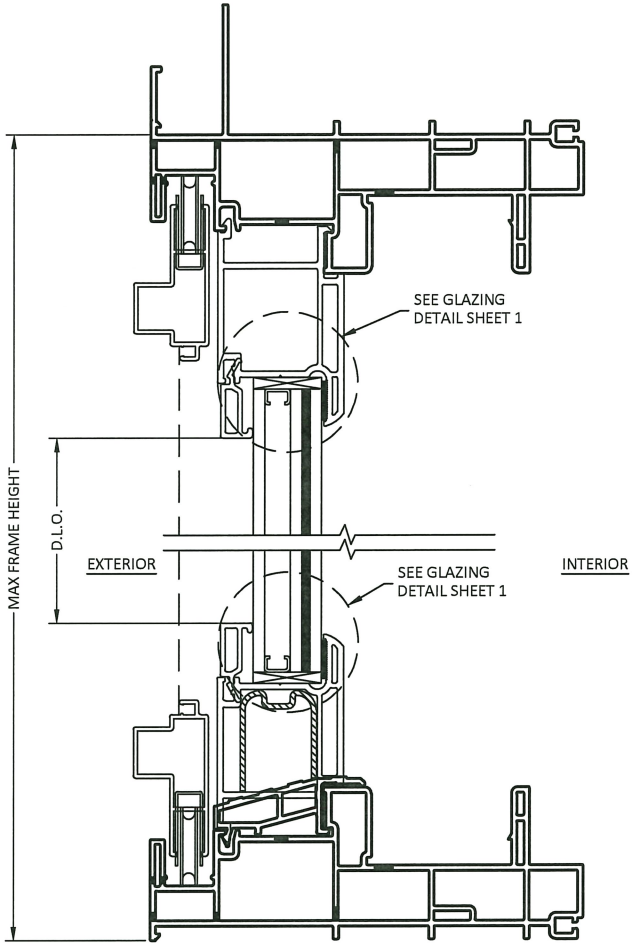

B/3 **VERTICAL SECTION**
NAIL FIN

AMERICAN CRAFTSMAN WINDOWS
SILVER LINE WINDOWS AND DOORS

ONE SILVERLINE DRIVE
NORTH BRUNSWICK, NJ 08902
PH: (888)-741-0357

TITLE: *70 SERIES/V3 SERIES/(5800) GLIDING PATIO DOORS (NON-HVHZ)(IMPACT)*
VERTICAL SECTIONS

PREPARED BY:
BUILDING DROPS, INC.
398 E. DANIA BEACH BLVD. STE. 338
DANIA BEACH, FL 33004
PH: (954)399-8478
FAX: (954)744.4738
WEB: www.buildingdrops.com

REMARKS	BY	DATE
6TH FBC EDITION	FM	10/17
7TH FBC EDITION	LH	10/20

THE INSTALLATION DETAILS DESCRIBED HEREIN ARE GENERIC AND MAY NOT REFLECT ACTUAL CONDITIONS FOR A SPECIFIC SITE. IF SITE CONDITIONS CAUSE INSTALLATION TO DEVIATE FROM THE REQUIREMENTS DETAILED HEREIN, A LICENSED ENGINEER OR ARCHITECT SHALL PREPARE SITE SPECIFIC DOCUMENTS FOR USE WITH THIS DOCUMENT.

HERMES F. NORERO
LICENSE
No. 73778
STATE OF FLORIDA
PROFESSIONAL ENGINEER

HERMES F. NORERO, P.E.
FLORIDA P.E. No. 73778
BUILDING DROPS, INC.
398 E. DANIA BEACH BLVD. # 338
DANIA BEACH, FL 33004
FBPE CERT. OF AUTHORIZATION No. 29578

FL #: FL 14998

DATE: 09.28.17

DWG. BY: CL | CHK. BY: HFN

SCALE: NTS

DWG. #: SWD039

SHEET: 3 OF 5

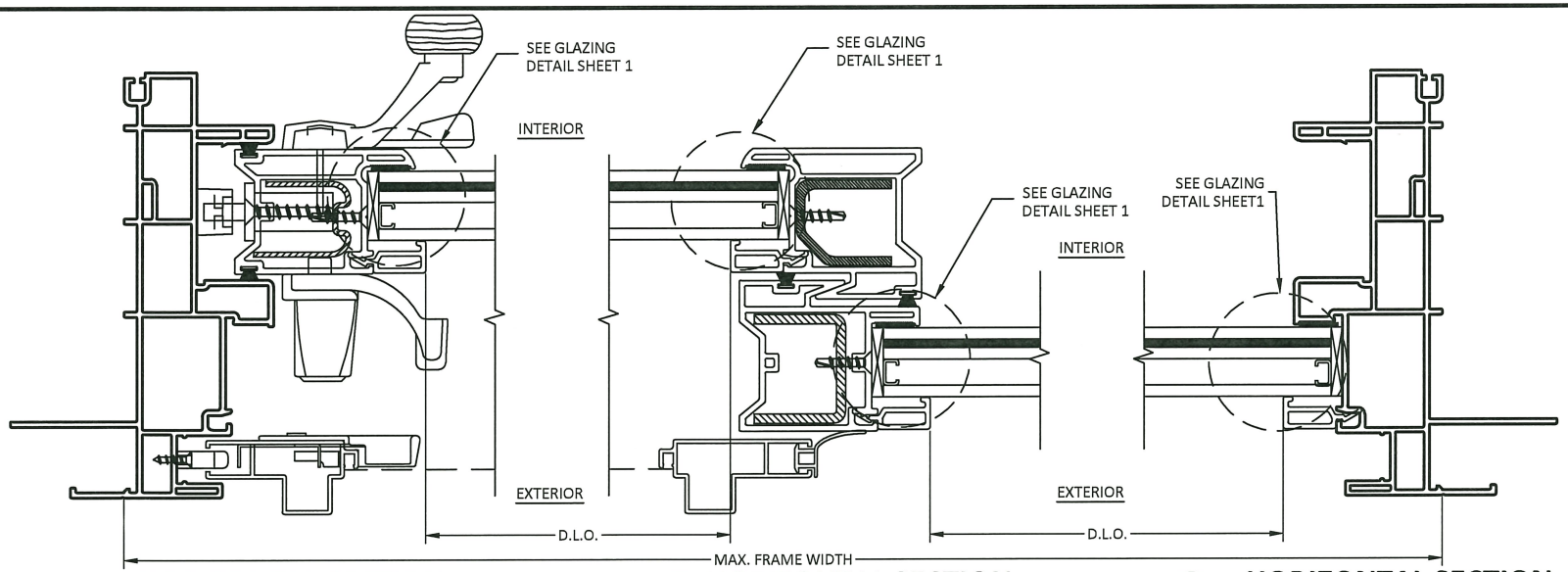

A/4 **HORIZONTAL SECTION**
NAIL FIN

B/4 **HORIZONTAL SECTION**
MEETING RAILS

C/4 **HORIZONTAL SECTION**
NAIL FIN

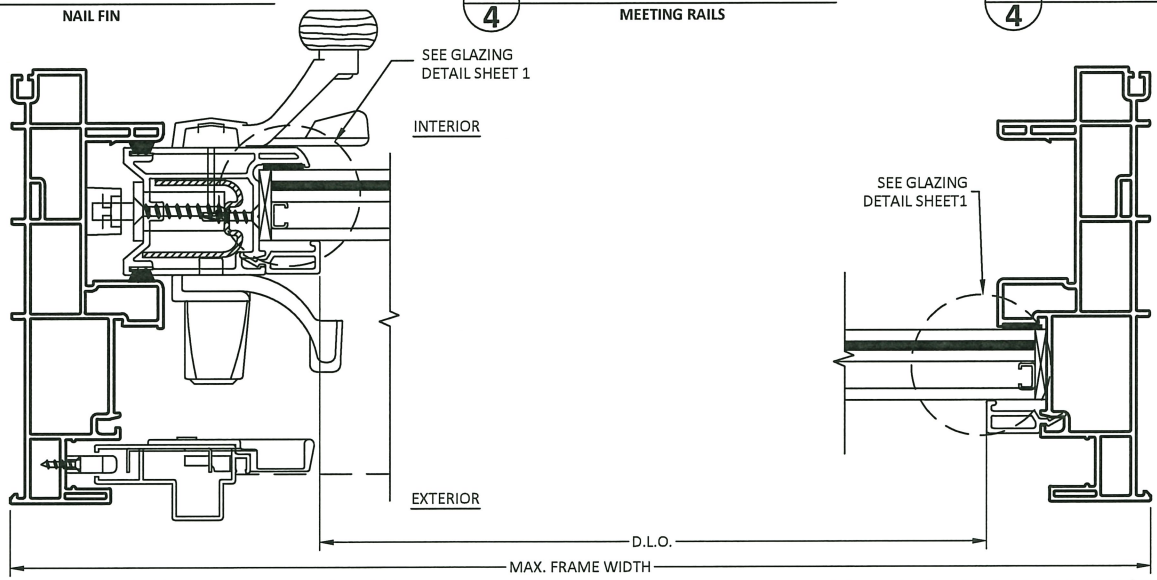

D/4 **HORIZONTAL SECTION**
THROUGH FRAME

E/4 **HORIZONTAL SECTION**
THROUGH FRAME

AMERICAN CRAFTSMAN WINDOWS
SILVER LINE WINDOWS AND DOORS

ONE SILVERLINE DRIVE
NORTH BRUNSWICK, NJ 08902
PH: (888)-741-0357

TITLE: *70 SERIES/V3 SERIES/(5800) GLIDING PATIO DOORS (NON-HVHZ)(IMPACT)*
HORIZONTAL SECTIONS

PREPARED BY:
BUILDING DROPS, INC.
398 E. DANIA BEACH BLVD. STE. 338
DANIA BEACH, FL 33004
PH: (954)399-8478
FAX: (954)744.4738
WEB: www.buildingdrops.com

REMARKS	BY	DATE
6TH FBC EDITION	FM	10/17
7TH FBC EDITION	LH	10/20

THE INSTALLATION DETAILS DESCRIBED HEREIN ARE GENERIC AND MAY NOT REFLECT ACTUAL CONDITIONS FOR A SPECIFIC SITE. IF SITE CONDITIONS CAUSE INSTALLATION TO DEVIATE FROM THE REQUIREMENTS DETAILED HEREIN, A LICENSED ENGINEER OR ARCHITECT SHALL PREPARE SITE SPECIFIC DOCUMENTS FOR USE WITH THIS DOCUMENT.

HERMES F. NORERO
LICENSE
No. 73778
STATE OF FLORIDA
PROFESSIONAL ENGINEER

HERMES F. NORERO, P.E.
FLORIDA P.E. No.73778
BUILDING DROPS, INC.
398 E. DANIA BEACH BLVD. # 338
DANIA BEACH, FL 33004
FBPE CERT. OF AUTHORIZATION No. 29578

FL #: FL 14998

DATE: 09.28.17

DWG. BY: CL | CHK. BY: HFN

SCALE: NTS

DWG. #: SWD039

SHEET: 4 OF 5

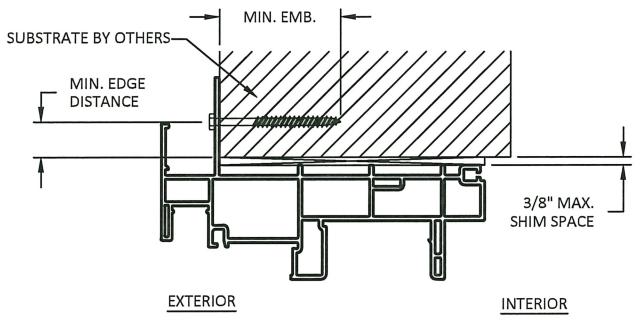

A/5 ANCHOR DETAIL
NAIL FIN

NOTE:
JAMB HAVE SIMILAR DETAIL

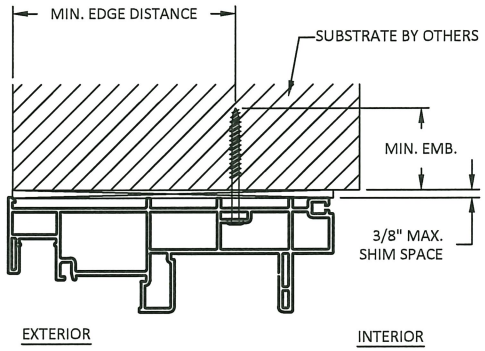

B/5 ANCHOR DETAIL
THROUGH FRAME (HEAD)

ANCHOR SCHEDULE				
METHOD	SUBSTRATE	ANCHOR SCHEDULE	MIN EMBEDMENT	MIN. EDGE DISTANCE
THROUGH FRAME & STRAP ANCHOR	WOOD: MIN. SG = 0.55	#10 WOOD SCREW	1.5"	0.75"
	METAL: 18 GAUGE Steel, MIN. Fy = 33KSI	#14 TEK SCREW	3 THREADS MIN PENETRATION BEYOND METAL	0.75"
	CONCRETE: f'c=2000PSI	1/4" ITW TAPCON	1.75"	2.5"
	MASONRY: CMU per ASTM C90	1/4" ITW TAPCON	1.75"	2.5"
NAIL FIN	WOOD: MIN. SG = 0.55	#8 WOOD SCREW	1.5"	0.75"
	METAL: 18 GAUGE Steel, MIN. Fy = 33KSI	#8 TEK SCREW	3 THREADS MIN PENETRATION BEYOND METAL	0.75"

INSTALLATION NOTES

1. ONE (1) INSTALLATION ANCHOR IS REQUIRED AT EACH ANCHOR LOCATION SHOWN.

2. THE NUMBER OF INSTALLATION ANCHORS DEPICTED IS THE MINIMUM NUMBER OF ANCHORS TO BE USED FOR PRODUCT INSTALLATION OF THE MAXIMUM SIZE LISTED.

3. INSTALL INDIVIDUAL INSTALLATION ANCHORS WITHIN A TOLERANCE OF ±1.000 INCH THE DEPICTED LOCATION & SPACING IN THE ANCHOR LAYOUT DETAILS (I.E., WITHOUT CONSIDERATION OF TOLERANCES). TOLERANCES ARE NOT CUMULATIVE FROM ONE INSTALLATION ANCHOR TO THE NEXT.

4. SHIM AS REQUIRED AT EACH INSTALLATION ANCHOR WITH LOAD BEARING SHIM(S). MAXIMUM ALLOWABLE SHIM STACK TO BE 3/8 INCH. SHIM WHERE SPACE OF 1/16 INCH OR GREATER OCCURS. SHIM(S) SHALL BE CONSTRUCTED OF HIGH DENSITY PLASTIC OR BETTER.

5. MINIMUM EMBEDMENT AND EDGE DISTANCE EXCLUDE WALL FINISHES, INCLUDING BUT NOT LIMITED TO STUCCO, FOAM, BRICK VENEER, AND SIDING.

6. INSTALLATION ANCHORS AND ASSOCIATED HARDWARE MUST BE MADE OF CORROSION RESISTANT MATERIAL OR HAVE A CORROSION RESISTANT COATING.

7. FOR MASONRY OR CONCRETE OPENINGS, A 1X WOOD BUCK MAY BE USED (OPTIONAL) AS LONG AS THE MINIMUM EMBEDMENT AND EDGE DISTANCE REQUIREMENTS ARE STILL MET WITHIN THE CORRESPONDING HOST SUBSTRATE. SEE GENERAL NOTE #3 ON SHEET 1 FOR MORE INFORMATION.

8. FOR HOLLOW BLOCK AND GROUT FILLED BLOCK, DO NOT INSTALL INSTALLATION ANCHORS INTO MORTAR JOINTS. EDGE DISTANCE IS MEASURED FROM FREE EDGE OF BLOCK OR EDGE OF MORTAR JOINT INTO FACE SHELL OF BLOCK.

9. INSTALLATION ANCHORS SHALL BE INSTALLED IN ACCORDANCE WITH ANCHOR MANUFACTURER'S INSTALLATION INSTRUCTIONS, AND ANCHORS SHALL NOT BE USED IN SUBSTRATES WITH STRENGTHS LESS THAN THE MINIMUM STRENGTH SPECIFIED BY THE ANCHOR MANUFACTURER.

AMERICAN CRAFTSMAN WINDOWS
SILVER LINE WINDOWS AND DOORS

ONE SILVERLINE DRIVE
NORTH BRUNSWICK, NJ 08902
PH: (888)-741-0357

TITLE: *70 SERIES/V3 SERIES/(5800) GLIDING PATIO DOORS (NON-HVHZ)(IMPACT)*
INSTALLATION NOTES & ANCHOR DETAILS & SCHEDULE

PREPARED BY:
BUILDING DROPS, INC.
398 E. DANIA BEACH BLVD., STE. 338
DANIA BEACH, FL 33004
PH: (954)399-8478
FAX: (954)744.4738
WEB: www.buildingdrops.com

REMARKS	BY	DATE
6TH FBC EDITION	FM	10/17
7TH FBC EDITION	LH	10/20

THE INSTALLATION DETAILS DESCRIBED HEREIN ARE GENERIC AND MAY NOT REFLECT ACTUAL CONDITIONS FOR A SPECIFIC SITE. IF SITE CONDITIONS CAUSE INSTALLATION TO DEVIATE FROM THE REQUIREMENTS DETAILED HEREIN, A LICENSED ENGINEER OR ARCHITECT SHALL PREPARE SITE SPECIFIC DOCUMENTS FOR USE WITH THIS DOCUMENT.

HERMES F. NORERO
LICENSE No. 73778
STATE OF FLORIDA
PROFESSIONAL ENGINEER

HERMES F. NORERO, P.E.
FLORIDA P.E. No 73778
BUILDING DROPS, INC.
398 E. DANIA BEACH BLVD. # 338
DANIA BEACH, FL 33004
FBPE CERT. OF AUTHORIZATION No. 29578

FL #: FL 14998

DATE: 09.28.17

DWG. BY: CL | CHK. BY: HFN

SCALE: NTS

DWG. #: SWD039

SHEET: 5 OF 5

Received December 30, 2025
Planning and Building Dept.

CITY OF ST AUGUSTINE
EST. 1565

Owner's Authorization For Agent

Ermal Alija is/are hereby authorized TO ACT ON BEHALF OF Cory Hutcherson, the owner(s) of those lands described within ☐ the attached application, or ☑ described within the previously filed Application number: HP2025-0087, and as described in the attached deed or other such proof of ownership as may be required, in applying to the City of St. Augustine's HARB Board, for an application related to the structure located at: 7 Saragossa St, Saint Augustine 32084

BY: _____
Signature of Owner

CORY HUTCHERSON
Print Name of Owner

(386)-569-4842
Telephone Number

State of Florida

County of Flagler

Signed and sworn before me on this 27th day of December, 2025

By Cory Hutcherson

Identification verified: F-LDL

Oath sworn: ✓ Yes ____ No

KYLE PEETS
Notary Public
State of Florida
Comm# HH232603
Expires 2/22/2026

Notary Signature: _____

My Commission expires: 02/22/2026

Rev:120219 jw

Received December 30, 2025
Planning and Building Dept.

CITY OF
ST AUGUSTINE.
EST. 1565

Permit Revision Submittal Form

Please submit this form for a Revision to an Issued Permit.

Multiple permit submissions require this form with each permit.

Please indicate the details of the contents of submission below.

Permit #: BP2025-0508 **Date:** 03/26/2025

Project Address: 7 Saragossa St, Saint Augustine 32084

Contractor: A & O Builders Contractors

Contact Phone Number: 9043835564

Contact Email: aobuilderscontractors1@gmail.com

Revision Job Value: $15,000

Revision Job Description (note page #'s to find corrections if applicable):
Remove and replace existing windows. Repair affected siding and related materials as needed due to water intrusion and damage from the existing window assemblies.

By signing below, I (print name) Ermal Alija **affirm that the above text revision is inclusive of the proposed changes.**

Ermal Aliaj
Signature of Contractor

12/29/25
Date

Candice Seymour

From: Kyle Sowards, EI <ksowards@dccm.com>
Sent: Monday, January 5, 2026 3:48 PM
To: Candice Seymour
Cc: Kaeli Dickinson; Frank Castillo; Larsen, Shane
Subject: Re: 241 St. George Street HARB Application

> **Caution:** This email originated from outside of the organization. Do not click links, open attachments or respond unless you recognize the sender and know the content is safe. When in doubt, contact IT.

Good afternoon, Candice.

Just to confirm, we wish to continue our COA approval to the February meeting. Please let me know if anything needs to be completed on the COSA portal to formally request the continuation.

Thank you,

Kyle Sowards, EI
Project Manager

Matthews | DCCM
(904) 593-8692 p

From: Candice Seymour <cseymour@citystaug.com>
Sent: Monday, January 5, 2026 1:41 PM
To: Kyle Sowards, EI <ksowards@dccm.com>
Cc: Kaeli Dickinson <kdickinson@dccm.com>
Subject: RE: 241 St. George Street HARB Application

> **Caution:** This e-mail originated from outside of the organization. Do not click links or open attachments unless you recognize the sender and know the content is safe.

Thank you, Kyle.

Have a great afternoon!

Candice Seymour
Historic Preservation Planner
City of St. Augustine
cseymour@citystaug.com
904-209-4326

Please Note: Florida has a very broad Public Records Law. Unless specifically exempt by state law, written communications to city officials or staff regarding official city business are public records available to the public and media upon request. If your email communication is related to official government business, it may therefore be subject to public disclosure.

Avoid Scams! The City of St. Augustine clearly posts all application fees on our website. Additional fees invoiced to applicants are always sent via a citystaug.com email address and are generally for legal ads in the *St. Augustine Record* and/or certified notices as required for applications heard by the HARB, CRC, or PZB, per City Ordinance and State Statute. All fees should be paid via the Permits Portal, by check amade out to the City of St. Augustine, or paid in person at the Planning & Building Department. The City of St. Augustine will never request that fees be wire transferred. If there is any question as to whether an invoice you received is legitimate, please call me or 904-825-1065 to confirm.

From: Kyle Sowards, EI <ksowards@dccm.com>
Sent: Monday, January 5, 2026 11:52 AM
To: Candice Seymour <cseymour@citystaug.com>
Cc: Kaeli Dickinson <kdickinson@dccm.com>
Subject: Re: 241 St. George Street HARB Application

> **Caution:** This email originated from outside of the organization. Do not click links, open attachments or respond unless you recognize the sender and know the content is safe. When in doubt, contact IT.

Good morning, Candice.

Thank you for reaching out. I wanted to give you a heads up that we will likely ask for a continuance to a future meeting to further prepare our submittal package. I will give you a final answer around 4 today. We are fully prepared to either submit or ask for a continuation today before 5 pm and will not ask for any materials submitted after the deadline to be considered during the upcoming HARB meeting.

Thank you,

Kyle Sowards, EI
Project Manager

Matthews | DCCM
(904) 593-8692 p

From: Candice Seymour <cseymour@citystaug.com>
Sent: Monday, January 5, 2026 10:37 AM
To: MDG Planning <MDG.planning@dccm.com>
Subject: 241 St. George Street HARB Application

Caution: This e-mail originated from outside of the organization. Do not click links or open attachments unless you recognize the sender and know the content is safe.

Good morning,

I am emailing to remind you that today is the deadline for additional information for the January 15 HARB meeting. Due to our current workload I cannot accept late submittals for this HARB cycle.

If you need additional time to compile all the needed information, you may consider requesting a continuance to a future meeting to give you the time to submit the full package as requested by staff and the Board. To make a continuance request, simply email HARB@citystaug.com under a separate email thread and request that the application be continued to the following meeting (February 19) or another future meeting if more time is needed.

Feel free to reach out to me with any questions! Hope the new year has treated you well thus far!

Candice Seymour
Historic Preservation Planner
City of St. Augustine
cseymour@citystaug.com
904-209-4326

Please Note: Florida has a very broad Public Records Law. Unless specifically exempt by state law, written communications to city officials or staff regarding official city business are public records available to the public and media upon request. If your email communication is related to official government business, it may therefore be subject to public disclosure.

Avoid Scams! The City of St. Augustine clearly posts all application fees on our website. Additional fees invoiced to applicants are always sent via a citystaug.com email address and are generally for legal ads in the *St. Augustine Record* and/or certified notices as required for applications heard by the HARB, CRC, or PZB, per City Ordinance and State Statute. All fees should be paid via the Permits Portal, by check amade out to the City of St. Augustine, or paid in person at the Planning & Building Department. The City of St. Augustine will never request that fees be wire transferred. If there is any question as to whether an invoice you received is legitimate, please call me or 904-825-1065 to confirm.

CITY OF ST AUGUSTINE

MEMORANDUM

To: The Historic Architectural Review Board

Date: January 15, 2026

Re: Issued Planning and Building Permits – HP Districts & HARB Approved Projects

During the month of December 2025, the Planning and Building Department issued the following permits for projects meeting pre-approved guidelines and/or HARB approved plans.

REPAIR, MAINTENANCE, AND NEW CONSTRUCTION

30 St. George Street (Re-roof shingle to metal 5v)

75 King Street (New tile and copper roofing)

50 Bridge Street (New roof Coating)

155 Cordova Street (New Water Heater and Gas Tank)

3 Cordova Street (Flat Roof Replacement)

60 Charlotte Street (Replace 2 water heaters)

32 Cordova Street (Stucco Repair and Flashing)

75 King Street (Demo balcony components for replacement)

33 King Street (Electrical)

172 Cordova Street (In-kind repairs)

101 Marine Street (Replace 8 wooden porch posts in-kind)

7 Aviles Street (Interior Demo)

6 Cordova Street (HARB approved installation of temporary pergolas)

75 King Street (Repair of existing balconies)

DEMOLITIONS

254 San Marco Avenue (HARB-approved demolition)

93 Kings Ferry Way (Partial Demo, HARB heard, administratively approved in-kind repairs and replacements)

16 Ferry Place (HARB-approved demolition)

Candice Seymour

Candice Seymour, Historic Preservation Planner