CITY OF
ST AUGUSTINE
EST. 1565

HISTORIC ARCHITECTURAL REVIEW BOARD

AMENDED

A G E N D A

THURSDAY, MARCH 19, 2026 - 1:00 PM

ALCAZAR ROOM

---

1. Roll Call
2. General Public Comments for Items not on the Agenda
3. Approval of Minutes
   a) February 19, 2026 - Regular Meeting
4. Modification and approval of Agenda

*5. Recommended Expedited Hearing Items (to be recommended one week in advance)

a) HP2026-0013
Leanna Freeman - Applicant
Victor Green - Owner
10 Elkton Lane
To demolish a residential building, constructed. c. 1905-1910, that is recorded in the Florida Master Site File and not located in a district.

6. Certificate of Appropriateness

a) HP2026-0011
Duncan Dailey - Applicant
Old City Leasing LLC –Owner
130 St. George Street
To replace the existing storefront with a new storefront system; and, to install a handicap access ramp.

7. Certificate of Demolition and Partial Demolition

a) HP2026-0010
Cabe Nolan - Applicant and Owner
17 Salt Run Court
To demolish three (3) residential buildings, constructed c.1936, that are recorded in the Florida Master Site File and not located in a district.

b) HP2026-0014 Florida Specialty Roofing Services LLC - Applicant
Ancient City Baptist Church - Owner
27 Sevilla Street
For partial demolition of a church building, constructed in 1895, that is recorded in the Florida Master Site File and contributing to the Model Land Company National Register Historic District, including removal of existing roofing materials on the main church structure and towers and replacement with roof covering of a different design.

8. Planning and Building Staff Communications
   a) Staff Approved Permits Report
9. Other Business
   a) Thank you for your service, Paul Weaver!
10. Next Scheduled Meeting Date(s):
    a) April 16, 2026 - Regular Meeting
11. Adjournment

Notices: In accordance with Florida Statute 286.0105: "If any person decides to appeal any decision made by the Historic Architectural Review Board with respect to any matter considered at this scheduled meeting or hearing, the person will need a record of the proceedings, and for such purpose the person may need to ensure that a verbatim record of the proceedings is made, which record includes the testimony and evidence upon which the appeal is to be based." In accordance with the Americans with Disabilities Act, persons needing a special accommodation to participate in this proceeding should contact the individual or agency sending notice not later than seven days prior to the proceeding at the address given on the notice. Telephone: (904) 825-1007 or 1-800-955-8771 (TDD).

Please note that one or more members of the City Commission or its appointed boards or committees may attend this meeting and participate, however they may not engage in a discussion or debate amongst themselves on any issue that will likely come before their respective elected or appointed body.

The materials prepared and presented are part of the City's ongoing Florida Public Records and Government in the Sunshine compliance, and are not intended to be relied upon or to reach investors or the trading markets.

CITY OF ST. AUGUSTINE

Historic Architectural Review Board Regular Meeting
February 19, 2026

The Historic Architectural Review Board met in formal session at 1:00 P.M., Thursday, February 19, 2026, in the Alcazar Room at City Hall, St. Augustine, Florida. Brad Beach, Chairperson, called the regular meeting to order, and the following were present:

1. ROLL CALL:

Brad Beach, Chairperson
Linda Potter, Vice-Chairperson
Paul Weaver, III
Catherine Duncan
Gaere MacDonald

City Staff:

Julie Courtney, Historic Preservation Officer
Candice Seymour, Historic Preservation Planner
Isabelle Lopez, City Attorney
Michele Fudo, Recording Secretary

---

2. General Public Comments for Items not on the Agenda

none

3. Approval of Minutes

MOTION

Mr. Weaver MOVED to APPROVE the December 18, 2026 minutes with the following clarification: that mahogany doors would be used on the first floor and light fixtures would be bronze finish on the mediterranean side of the building and black metal finish on the colonial side of the building. The motion was SECONDED by Mr. MacDonald.

VOTE ON MOTION:
AYES: Weaver, MacDonald, Duncan, Potter, Beach
NAYES: NONE
MOTION CARRIED UNANIMOUSLY

MOTION

Mr. Weaver MOVED to APPROVE the January 15, 2026 minutes as presented. The motion was SECONDED by Ms. Potter.

VOTE ON MOTION:
AYES: Weaver, Potter, MacDonald, Duncan, Beach
NAYES: NONE
MOTION CARRIED UNANIMOUSLY

4. Modification and approval of Agenda

Staff recommended Continuance for item 6.c HP2025-0083 to a date uncertain.

Item 7.b. HP2026-0006 requested continuance to the May 21, 2026 meeting.

MOTION

Mr. Weaver MOVED to APPROVE the Agenda including the following changes: item 6.c HP2025-0083 would be continued to a date uncertain and item 7.b HP2026-0006 would be continued to May 21, 2026. The motion was SECONDED by Mr. MacDonald.

VOTE ON MOTION:
AYES: Weaver, MacDonald, Duncan, Potter, Beach
NAYES: NONE
MOTION CARRIED UNANIMOUSLY

5. Recommended Expedited Hearing items (to be recommended one week in advance):

5. (a) HP2026-0002 – Les Gallagher & Scott Rae – Applicant
Terri & Ryan Pereira – Owner
201 Inlet Drive

To demolish a residential building, constructed c. 1972, that is recorded in the Florida Mater Site File and not located in a district.

Ms. Seymour read the staff report and said based on a review of the AGHP and without the support of evidence to the contrary, staff finds that the board can APPROVE a Certificate of Demolition at 201 Inlet Drive because it is not a local landmark or otherwise designated as a historic building.

Scott Rey waived the right to a presentation as this was an expedited hearing.

Ex Parte Communication:

(None)

Mr. Beach reviewed the certified notice responses and emails received for the application.

Public hearing was opened; however, there was no response.

The Board discussed:

- Had renovation been considered prior to the decision to demolish and rebuild a two-story house
- Renovation had been considered; however, the danger of flooding influenced the decision to tear down and rebuild
- There were many other two-story houses in the neighborhood
- This was not in an historic district
- Administrative approval depended on the current elevation compared to FEMA requirements
- Were there any salvageable materials available for reuse in another project
- It did not appear that there were any such materials

MOTION

Mr. MacDonald MOVED to APPROVE application HP2026-0002 at 201 Inlet Drive with a good faith effort to salvage any materials that had value. The motion was SECONDED by Ms. Duncan.

VOTE ON MOTION:
AYES: MacDonald, Duncan, Weaver, Potter, Beach
NAYES: NONE
MOTION CARRIED UNANIMOUSLY

Ms. Lopez advised the applicant that this approval was not the final step, that building permits would need to be obtained and approved.

6. Certificate of Appropriateness

6. (a) HP2025-0074 – Central Southern Services, LLC – Applicant & Owner
264 St George Street
Continued from November 20, 2025

To install a new metal gate across an existing driveway.

Ms. Seymour read the staff report and said based on a review of the AGHP, and without the support of evidence to the contrary, staff finds that the board can APPROVE a Certificate of Appropriateness at 264 St. George Street if the HARB finds that the proposed new gate meets the Secretary of the Interior's Standards for Rehabilitation #9 as a compatible contemporary design if the proposed width is found appropriate.

Ashley Butey reviewed the application.

Ex Parte Communication:

(None)

Public hearing was opened; however, there was no response.

The Board discussed:

- The new drawings were good
- Fifteen feet was a big gate
- Would rather see a tail on the column on the right side to bring balance to the structure
- This met the spirit if not the letter of the guidelines
- The height seemed proportionate to the width
- The AGHP allowed for at least four feet but not more than five feet of height
- Preferred a twelve-foot gate which would narrow the opening

MOTION

Mr. MacDonald MOVED to APPROVE application HP2025-0074 at 264 St. George Street with the condition that the gate be narrowed from fifteen feet two inches to twelve feet of open space, the column in the reciprocating position to accommodate the change, and a wall to match to the north at an appropriate distance. The motion was SECONDED by Mr. Weaver.

VOTE ON MOTION:
AYES: MacDonald, Weaver, Duncan, Potter, Beach
NAYES: NONE
MOTION CARRIED UNANIMOUSLY

Ms. Lopez advised the applicant that this approval was not the final step, that building permits would need to be obtained and approved.

6. (b) HP2025-0080 – Studio Femke – Applicant
58 Charlotte Street – Owner
58 Charlotte Street
Continued from December 18, 2025

For design changes to outdoor spaces.

Ms. Seymour read the staff report and said based on a review of the AGHP, and without the support of evidence to the contrary, staff finds that the board can APPROVE a Certificate of Appropriateness at 58 Charlotte Street if the HARB finds that proposed scope of work meets the Secretary of the Interior's Standards for Rehabilitation #9 as a compatible contemporary design.

Femke Lang reviewed the application.

Ex Parte Communication:

(None)

Public hearing was opened; however, there was no response.

The Board discussed:

- Was a firepit historically appropriate for the area
- A modified well feature with a water circulation system could be used
- The fire pit would be about three to four feet around and about three feet high and would provide ambience for the area
- This would be an ornamental feature
- The door should be a darker color
- Need to look at the true historic appearance
- Cushions were being considered for use on the stucco seating
- Historically almost every lot would have had a firepit
- The appearance of too much brick had been addressed
- Be sure to use authentic design and materials for the fire pit feature
- The color of the door was within the guidelines
- Sand set the brick rather than use mortar
- Existing brick had been sand set
- Use coquina for the fire pit
- Be sure to use 4-inch-thick brick for sand setting in the courtyard

DRAFT

- Canvas cushions with no design should be used for the seating
- Podocarpus was the selected plant and was a "friendly" plant, widely used in the area

There was further discussion to determine the height and materials for the fire pit, which would not be visible from the street. It was recommended that two feet high was sufficient, with a four-foot diameter, using coquina.

MOTION

Mr. MacDonald MOVED to APPROVE application HP2025-0080 with the old Columbian bricks to be used in the rear and would be sand set and reusing the wood molds from the front; the fire pit in the back was preferred to be coquina but could use white stucco with maximum diameter of four feet and two feet in height with a recommendation to not make it one foot thick; the ocher color was approved for the entry doors and cushions would be approved in canvas; Podocarpus was approved for the plantings, any other plant choices could be taken to staff for approval. The motion was SECONDED by Mr. Weaver.

VOTE ON MOTION:
AYES: MacDonald, Weaver, Duncan, Potter, Beach
NAYES: NONE
MOTION CARRIED UNANIMOUSLY

Ms. Lopez advised the applicant that this approval was not the final step, that building permits would need to be obtained and approved.

6. (c) HP2025-0083 – Shawn Lumley – Applicant
Ivan Topalov – Owner
27 Grove Avenue
Continued from January 15, 2026
STAFF RECOMMENDS CONTINUANCE

This item was continued to a date uncertain, see item four.

For after-the-fact replacement of original wood windows with new wood windows of a different design.

6. (d) HP2026-0003 – KRB Construction LLC – Applicant
SAR 2020 Partners LLC – Owner
7 Aviles Street

To remove and replace the south masonry wall of the existing structure.

Ms. Seymour read the staff report and said based on a review of the AGHP, and without the support of evidence to the contrary, staff finds that the board can take the following actions for a Certificate of Appropriateness at 7 Aviles Street:

1 APPROVE the application if the Board finds that the proposed south wall reconstruction meets the Secretary for the Interior's Standards for Rehabilitation #9 as a compatible contemporary design with the condition that sufficient structural safeguards are added or already in place to prevent damage to the remaining structure while the existing wall in removed; OR,

2 CONTINUE the application to allow the applicant time to provide additional information including the material make-up of the existing wall and the proposed finish of the reconstructed wall.

Chad Swanager reviewed the application.

Mr. Weaver confirmed that the entire section of the wall would have to come down and was obscured by the neighboring building.

Mr. Swanager advised that there were eight inches of clearance between the two buildings and much of this wall was not visible.

Mr. MacDonald agreed that an emergency demolition was necessary and should be

done as quickly as possible. He described a method that could be used to replace the wall, that would be acceptable.

Ex Parte Communication:

(None)

Public hearing was opened.

Frank Ringhaver, architect of record for the project, suggested a texture coating that would match the sand finish that already existed.

Public hearing was closed.

The Board discussed:

- Texture coating needed to be waterproofed and tended to look fake
- Kime paint was another alternative that was long lasting
- Trinity Church had used this type of paint with a good result
- Fully supportive of the project, including the demolition
- Confirmed that there would be no stucco

MOTION

Mr. MacDonald MOVED to APPROVE application HP2026-0003 at 7 Aviles Street to demolish the south wall and reconstruct it with block with a washed joint and paint the outside with Kime paint that would match the existing colors and any openings on the wall needed to be maintained. The motion was SECONDED by Mr. Weaver.

VOTE ON MOTION:
AYES: MacDonald, Weaver, Duncan, Potter, Beach
NAYES: NONE
MOTION CARRIED UNANIMOUSLY

Ms. Lopez advised the applicant that this approval was not the final step, that building permits would need to be obtained and approved.

7. Certificates of Demolition and Partial Demolition

7. (a) HP2026-0005 – Ancient City Capital LLC – Applicant & Owner
317 Anastasia Boulevard (PID 2189700030)

To demolish a residential duplex, constructed c. 1930, that is recorded in the Florida Master Site File and not located in a district.

Ms. Seymour read the staff report and said based on a review of the AGHP and without the support of evidence to the contrary, staff finds that the board can take the following actions for a Certificate of Demolition at 317 Anastasia Boulevard:

1 APPROVE because it is not a local landmark or otherwise designated as a historic building; OR

2 CONTINUE to allow staff time to explore eligibility of the Thomas Tourist Court buildings for Local Historic Landmark status.

Christopher Walker reviewed the application.

Ex Parte Communication:

(None)

Public hearing was opened; however, there was no response.

The Board discussed:

- Confirmed that the proposed parking, after the demolition, would be for the business owned by the applicant.
- Recommended that the building be photographed prior to demolition
- Weaver referenced two Florida Master Site Files.

- There were no historic photos available for the building
- Final determination could be requested from the state if necessary
- Staff had completed due diligence, and this building did not appear to have any significance historically
- Confirmed that the other two buildings would not be torn down

MOTION

Mr. Weaver MOVED to APPROVE application HP2026-0005 at 317 Anastasia Boulevard to demolish a residential duplex based on the fact that this building appears to have no historical or architectural significance either as a City of St. Augustine landmark National Register property or a building contributing to a potential National Register District. The motion was SECONDED by Ms. Duncan.

VOTE ON MOTION:
AYES: Weaver, Duncan, MacDonald, Potter, Beach
NAYES: NONE
MOTION CARRIED UNANIMOUSLY[1]

Ms. Lopez advised the applicant that this approval was not the final step, that building permits would need to be obtained and approved.

7. (b) HP2026-0006 – Sarah Ryan Architect, LLC – Applicant
Clifton and Rachelle Miller – Owner
68 Oneida Street

For partial demolition of a residential building, constructed c. 1871-1885, that is recorded in the Florida Master Site File and contributing to the Lincolnville National Register Historic District, for work related to building elevation and rehabilitation, including modifications to the foundation and enclosed front porch and removal and replacement of rear additions.

This application had requested a continuance to the May 21, 2026 meeting. See item four.

8. Certificates of Demolition

8. (a) HP2025-0072 – Matthews | DCCM – Applicant
Sisters of St. Joseph, Inc – Owner
241 St. George Street

To construct a new institutional building on the northern portion of the property with associated alterations and repairs to existing masonry perimeter walls and new hardscape and landscape designs.

Ms. Seymour read the staff report and said based on a review of the AGHP and without the support of evidence to the contrary, staff finds that the board can APPROVE a Certificate of Appropriateness at 241 St. George Street if the Board finds that the new structure meets the Secretary of the Interior's Standards for Rehabilitation #9 as a compatible contemporary design along the streetscape and within the HP-1 district as presented or modified by the HARB.

Shane Larsen, Kyle Soward, and Eric Wainwright reviewed the application.

Ex Parte Communication:

(None)

Public hearing was opened; however, there was no response.

The Board discussed:

- The wall sections showed a soffit
- The roof would have exposed rafters
- The trim detail on the column looked like a shelf, it was too big

[1] Break 2:52 – 3:07 pm

- The same feature on the older building was not as pronounced
- The fence served as protection so that no one would fall into the pond
- There was an approximate grade of four feet down to the pond
- The elevation on Aviles Street had been improved and softened
- A true brick paver had not been selected as the concrete pavers were porous
- The guidelines indicated that the brick should be clay
- There was an historic existing clay brick on site
- The modern paver may not blend well with the older bricks
- There was another option that was not porous but allowed water to pass through the gaps between the pavers
- The brick should be replaced in kind for the city sidewalk/right-of-way
- Confirmed that there would be no fountain in the pond; there would be an aeration system for the pond
- The water level was 4 feet below grade
- There was landscaping on the inside of the fence around the pond
- The roof on the chapel cupola would be done in a wrapping pattern
- Increase the size of the bottom trim
- Use Ogee trim on the bottom of the columns
- A French Drain system could be used to support the drainage from clay pavers
- Aluminum Clad windows would be used
- The gate design as presented was acceptable
- The landscape did not block the view of the building, rather it would define the building

A discussion of the landscaping showed some of the different plants that would be used on the site.

- The canopies over the balconies were concrete and steel

A discussion followed showing the details from the construction drawings for the balconies and the associated canopies.

MOTION

Ms. Duncan MOVED to APPROVE application HP2025-0072 at 241 St. George Street with the following conditions; the pavers in the driveway would be a clay brick paver; stucco on the CMU would be a traditional three coat stucco; there would be exposed rafters on all of the overhangs; the column capitols would be all the way around the column and a Roman ogee profile would be used at the bottom. The motion was SECONDED by Mr. Weaver.

VOTE ON MOTION:
AYES: Duncan, Weaver, MacDonald, Potter, Beach
NAYES: NONE
MOTION CARRIED UNANIMOUSLY

Ms. Lopez advised the applicant that this approval was not the final step, that building permits would need to be obtained and approved.

9. Planning and Building Staff Communications

9. (a) Planning and Building Staff Approved Permits Report

(Provided for informational purposes)

10. Other Business

10. (a) National Alliance of Preservation Commissions January 22, 2026 webinar: Supporting Skilled Preservation Trades at the Local Level: What Commissions and City Staff Need to Know (recorded version available to view)

Ms. Courtney provided a summary of the webinar she participated in, in January.

10. (b) Legislative Update

Ms. Lopez provided a legislative update.

11. Next Scheduled Meeting Date(s):

11.(a) March 19, 2026 – Regular Meeting

12. Adjournment

There being no further business, the meeting was adjourned at 4:31 P.M.[2]

_____

Brad Beach, Chairperson

DRAFT

[2] Transcribed by Michele Fudo

CITY OF ST. AUGUSTINE HISTORIC ARCHITECTURAL REVIEW BOARD

STAFF REPORT AND RECOMMENDATION

Prepared for March 19, 2026 Meeting

Application HP2026-0013 Address: 10 Elkton Lane

Leanna Freeman – Applicant Victor Green - Owner

Project description: To demolish a residential building, constructed. c. 1905-1910, that is recorded in the Florida Master Site File and not located in a district.

Architectural Style:	Frame Vernacular	Florida Master Site File:	SJ00791
National Register:	N/A	Construction date:	c. 1905-1910
Archaeology Zone:	N/A	Zoning District:	CM-2
Parcel number:	1117400000		
Agenda Item:	5(a)	Previous Action(s):	N/A

STAFF SUMMARY AND ANALYSIS:

This one-story residential structure, built between 1905 and 1910, is located on the west side of Elkton Lane one lot south of W. King Street in West Augustine and is surrounded on three sides by City-owned property which includes Fleet Maintenance.

The building features a cross-gable metal roof with several shed roof additions off the south, west, and north sides of the building. The primary entrance to the home is accessed from the west elevation. Siding is mostly Hardie-lap, though some wood novelty siding is visible within the gable ends. Windows are a combination of 1/1 aluminum and vinyl windows and 2/2 aluminum windows with horizontal muntins. A large picture window with an aluminum awning faces Elkton Lane.

Detailed analysis and additional comments can be found in the staff responses to the Demolition Review Criteria on page 3 of this staff report. Any full demolition of a structure aged 50 years or older requires review and approval by the HARB.

STAFF RECOMMENDATION:

Based on a review of the AGHP and without the support of evidence to the contrary, staff finds that the board can **APPROVE** a **Certificate of Demolition** at **10 Elkton Lane** because it is not a local landmark or otherwise designated as a historic building.

Candice Seymour

Candice Seymour, Historic Preservation Planner

SUMMARY SCOPE OF WORK:

1. Demolition of a residential building.

DEMOLITION REVIEW CRITERIA (AGHP):

1. Whether or not the structure is within or is immediately facing a locally designated historic preservation zoning district. N/A

2. The contribution of the structure to the mass and scale of the streetscape. The building has a similar mass and scale as the other remaining one-story residential building along the streetscape. These residential structures are dwarfed by surrounding commercial and institutional buildings. Elkton Lane ends at a city property access gate.

3. The impact of the loss of the structure on the streetscape. The building does not have a unique typology for the area but is one of only two remaining residential buildings on the street.

4. Whether or not the structure will be replaced and the impact of a replacement structure, or lack thereof, on the streetscape. No design requirements are in place for this area; however, it is encouraged not to replicate historic styles and to use inspiration of the immediate context area to design a compatible building with respect to height, mass, scale, rhythms, materials, site plans, etc. Any redevelopment plans should consider the Tree and Landscape Ordinance and meet zoning requirements.

5. The historical or cultural merit of the structure. The building is listed on the Florida Master Site File but is not located in a district. No historic or cultural associations are known that would qualify the building for listing individually, it would not contribute to a district due to alterations according to the Florida Master Site File survey. The first Polk City Directory entry for this property was in 1927. Prior to that date, West Augustine was not included in Polk City Directories. Original residents of the structure were African American laborers, domestic workers, and fishermen. The longest recorded owner was Herman Lawton, a laborer with the City Streets Department.

6. The impact of the loss of the structure on the historical or cultural integrity of the city, district and neighborhood. The building is not designated as historic and is not eligible for individual designation or to be considered contributing to a historic district.

7. Whether or not the structure is representative of a style or type of architecture or a method of construction. The building is an example of a simple one-story Frame Vernacular residence that has seen alterations and suffered from deferred maintenance over time.

8. ***Whether or not the structure is one of the last surviving examples of its style or type of architecture or a method of construction.*** The building typology is commonly found throughout St. Augustine particularly in the residential areas of West Augustine.

9. ***Whether or not the structure is of such design, craftsmanship or materials that it either could not be reproduced, or could be reproduced only with great difficulty or expense. The condition of the structure, and the possibility of rehabilitating or relocating the structure.*** The wood frame building does not have a unique architectural style or characteristics that would be difficult to reproduce but new construction will be significantly different in appearance.

10. ***The justification for the proposed demolition.*** The applicant is in the process of purchasing the property and seeks to demolish the building and maintain the vacant lot.

APPLICATION REQUIREMENTS, ELIGIBILITY FOR DEMOLITION REVIEW, CONDITIONS FOR DEMOLITION APPROVAL:

Eligibility for Demolition Review (Section 28-87(3), CoSA Code of Ordinances)

The review of all applications for demolition or partial demolition permits for historic or regulated structures. Also, review all applications for demolition or partial demolition permits for primary structures within historic preservation zoning districts and National Register districts for potential designation as an historic landmark, and review of partial demolition permits for regulated structures not eligible for administrative approval. Privately owned single-family residential structures that qualify for complete demolition by statute and are not otherwise exempt pursuant to F.S. ch. 553.79(25), will be processed consistent with state law.

National Register Status (Section 28-89(7), CoSA Code of Ordinances)

Applications for certificate of demolition of a building or structure that is of exceptional significance including a local historic landmark, has been a contributing property to a National Register of Historic Places District or has been individually listed on the National Register of Historic Places shall require the following with the burden of proof to be on the applicant. The board may also require the following of structures considered to be contributing to the historical character of the city: 1) requiring submittal of a condition assessment report performed by a qualified professional; 2) requiring the applicant to prove "undue economic hardship" to justify demolition; and 3) allowing HARB the option to deny the demolition request if an undue economic hardship is not proven and removal of the building or structure will be detrimental to the historic and architectural character of the city.

Local Landmark Designation (Section 28-87(3) & (10), CoSA Code of Ordinances)

HARB is assigned the authority of reviewing all applications for demolition or partial demolition permits for historic or regulated structures. Also, review all applications for demolition or partial demolition permits for primary structures within historic preservation zoning districts and National Register districts for potential designation as an historic landmark"… for potential designation as an historical landmark. "Local historic landmarks" are defined as a building, object, site or structure of the highest historical, architectural, cultural or archaeological importance and whose demolition, removal, relocation, or alteration would constitute an irreplaceable loss to the character and quality of the city.

Conditions for Demolition Approval (Section 28-89(6), CoSA Code of Ordinances)

HARB has the discretion in its review of an application for Certificate of Demolition to require, as conditions for approval, one or more of the following:

- Architectural Salvage **-** *As a condition of issuing a certificate of demolition, the board may require, at the applicant's expense, salvage and preservation of significant building materials, architectural details and ornaments, fixtures, and the like for reuse in restoration of other historic properties.*
- Archival Documentation - *The board may also require at the applicant's expense the recording of the structure for archival purposes prior to demolition. The recording may include, but shall not be limited to, photographs and measured drawings.*

~~~~~~~~~~~~~~~~~

The building was built by 1910 and is thus more than 50 years old. The building is not in a Historic Preservation Zoning District or National Register Historic District, or individually listed on the National Register of Historic Places but is recorded on the Florida Master Site File.

The requirements for review have been sufficiently met.
~~~~~~~~~~~~~~~~~

Additional References for Demolition Review From City Code:

Sec 28-89(3) (as revised in 2024): In the case of the proposed demolition of an existing historic structure, or a project that constitutes partial demolition of a historic structure that the removal of such structure or architectural features will not be detrimental to the historic and architectural character of the city or that, balancing the interest of the city in preserving the integrity of the city and interest of the owner of the property.

a. Approval of the plans for demolition in the latter event the board may issue an order postponing demolition for a period of not to exceed twelve (12) months after which the owner must reapply. The board may issue a second postponement with the total postponement period not to exceed two (2) twelve-month periods. If the board concludes that the demolition should be postponed, it shall, before issuing any final order with respect to such postponement, afford the applicant an opportunity to appear before the board to offer any evidence they may desire to present concerning the proposed order. Within the period of postponement, the board shall ascertain what the city or other agency or organization may do to preserve such structure and shall make recommendations to that effect to the city commission or otherwise cause the structure to be preserved. This section shall not apply to any permit for demolition which has been applied for, in proper form, prior to the effective date of this section.
b. If the building or structure is of exceptional significance including a local historic landmark, is a contributing property to a National Register of Historic Places District or has been individually listed on the National Register of Historic Places, the board can deny the demolition if the board finds the removal of such building or structure will be detrimental to the historic and architectural character of the city and the applicant has not proven the denial will cause an undue economic hardship.

Sec 28-87(10) under (HARB) Responsibilities:
Designate historic landmarks. As utilized herein the term "local historic landmark" shall mean a building, object, site, or structure of the highest historical, architectural, *cultural, or archaeological importance and whose demolition, removal, relocation, or alteration would constitute an irreplaceable loss to the character and quality of the city. In the event the historic architectural review board desires not to issue a demolition or partial demolition permit for a structure that it finds could meet the criteria for a historic landmark*, the historic architectural review board shall initiate proceedings for designation of the structure as a historic landmark. *In the designation of a historic landmark,* the historic architectural review board shall evaluate the subject property using criteria and standards established by the National Register of Historical Places for national landmarks, or if evaluating the structure as a potential local historic landmark substituting the importance of the resource to the city and state rather than the nation as a whole. No property shall be designated as a historic landmark without first providing the owner of the proposed historic landmark with notice and an opportunity to be heard in the same manner as that provided for a rezoning of property. In addition, consistent with F.S. ch. 553.79(25), a local landmark designation for a privately owned single-family residential structure that qualifies for complete demolition by statute must include the consent of its owner. Any determination of the historic architectural review board shall be subject to appeal by any affected person to the city commission without any fee being charged or levied.

UNREASONABLE OR UNDUE ECONOMIC HARDSHIP:
Defined as an onerous and excessive financial burden that would be placed upon a property owner by the denial of a certificate of demolition or a similar burden which would be placed on a property owner by conditions which the Commission seeks to place on the granting of a certificate. (Section 28-2 CoSA Code of Ordinances)
Is applicant entitled to a Certificate of Demolition independent of any hardship? ☑ Yes ☐ No
Did applicant submit evidence of undue economic hardship? ☐ Yes ☑ No

In any instance where an undue economic hardship, as defined in this chapter, is claimed by a property owner, the property owner may submit to the board any or all of the following information before the board makes a decision on the application for certificate of demolition: (Section 28-89(7)b, CoSA Code of Ordinances)

(Materials submitted by applicant noted with a checked box)

- ☐ 1. An estimate of the cost of the proposed construction, alteration, demolition, or removal;
- ☐ 2. The estimated market value of the property in its current condition; after completion of the proposed construction, alteration, demolition, or removal; and, in the case of a proposed demolition, after renovation of the existing property for continued use;
- ☐ 3. In the case of a proposed demolition, an estimate from an architect, developer, licensed contractor, real estate consultant, appraiser, or other real estate professional experienced in rehabilitation as to the economic feasibility of rehabilitation or reuse of the existing structure on the property;
- ☐ 4. The annual gross income from the property for the previous two (2) years; itemized operating and maintenance expenses for the previous two (2) years; and depreciation deduction and annual cash flow before and after debt service, if any, during the same period;
- ☐ 5. The remaining balance on any mortgage or other financing secured by the property and annual debt service, if any, for the previous two (2) years;
- ☐ 6. All appraisals obtained within the previous two (2) years by the owner or applicant in connection with the purchase, financing, or ownership of the property;
- ☐ 7. Any listing of the property for sale or rent, price asked, and offers received, if any, within the previous two (2) years;
- ☐ 8. The assessed value of the property according to the two (2) most recent assessments;
- ☐ 9. The real estate taxes for the previous two (2) years;
- ☐ 10. The form of ownership or operation of the property, whether an individual, sole proprietorship, for profit or not-for-profit corporation, limited partnership, joint venture, or other;

Any other information considered necessary by the board to a determination as to whether the property does yield or may yield a reasonable return to the property owner. The board may require that the property owner furnish such additional information as the board believes is relevant to the board's determination of any alleged undue economic hardship. No decision of the board shall result in undue economic hardship for the property owner. In any case where undue economic hardship is claimed, the board shall make two (2) specific findings. First, the board shall determine if the owner would be entitled to a certificate of demolition without consideration of undue economic hardship. Second, the board shall determine whether the owner demonstrated an undue economic hardship.

Additional information requested by HARB as per above:

LIST OF ATTACHMENTS:

1. Staff Photographs
2. Florida Master Site File survey
3. Sanborn Map(s)
4. Polk City Directory Research

Staff Photographs
10 Elkton Lane

Front (east) Elevation

Staff Photographs
10 Elkton Lane

Staff Photographs
10 Elkton Lane

Staff Photographs
10 Elkton Lane

Staff Photographs
10 Elkton Lane

Staff Photographs
10 Elkton Lane

Staff Photographs
10 Elkton Lane

Staff Photographs
10 Elkton Lane

Interior

Staff Photographs
10 Elkton Lane

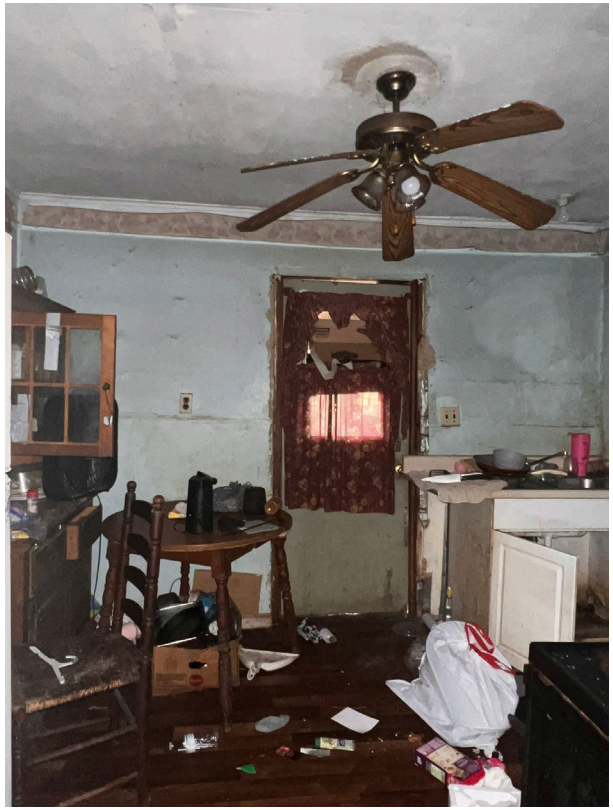

Staff Photographs
10 Elkton Lane

Staff Photographs
10 Elkton Lane

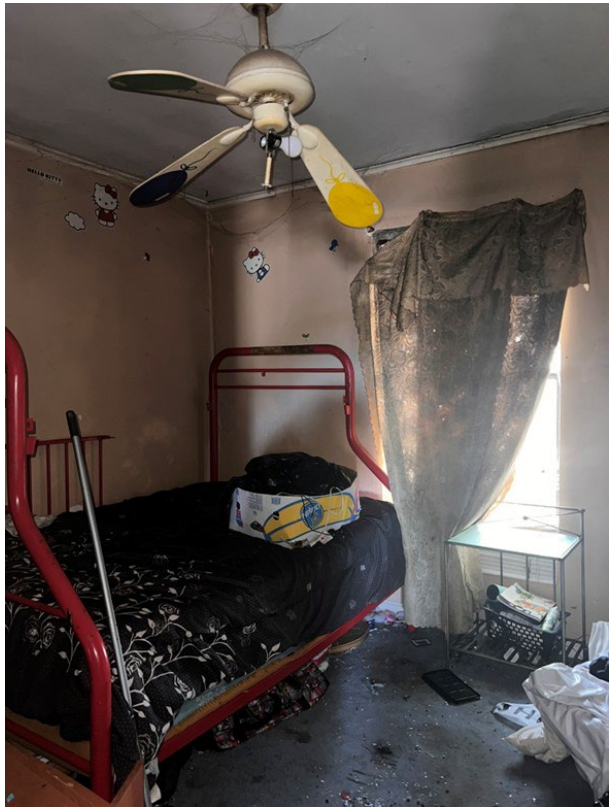

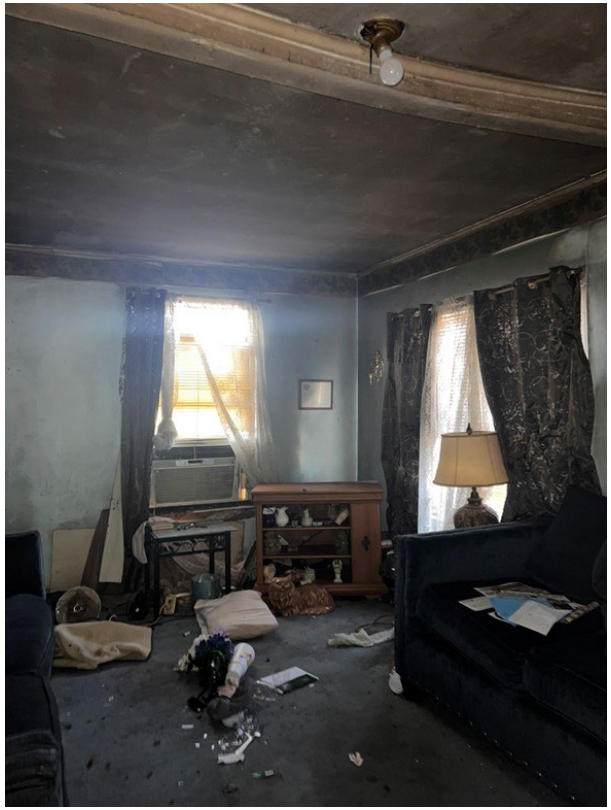

SEE SITE FILE STAFF FOR ORIGINAL PHOTO(S) OR MAP(S)

FLORIDA MASTER SITE FILE

HISTORIC ST. AUGUSTINE PRESERVATION BOARD

HISTORIC PROPERTIES INVENTORY FORM

I. LOCATION & LEGAL DESCRIPTION

FDAHRM 802== Site No. 8 SJ 791 1009==

Site Name: 10 Elkton Street 830== Survey Date: 7908 820==

Address: 10 Elkton Street, St. Augustine, Fla. 32084 905==

Instructions for Locating:

813== County: St. Johns 808==

Location: Dancy Tract (subdivision) 18 (block) 1 (lot) 868==

868==

Owner of Site: Name: Lawton, Rosa Bell;

Address: 10 Elkton Street

St. Augustine, Fla. 32084 902==

Occupant or Manager: 904==

Type of Ownership: Private 848== Zoning: CI

NR Classification Category: Building 916== Recording Date: 832==

UTM: (zone) (easting) (northing) 890== Location: T07S (T) R29E (R) S41 (S) 812==

Map Reference: USGS St. Augustine 7.5 MIN 1956 (PR 1970) 809==

Recorder: Name & Title: Nolan, David (Historic Sites Specialist);

Address: H.S.A.P.B. 818==

II. SITE DESCRIPTION

Condition of Site:

( ) Excellent 863==

(x) Good 863==

( ) Fair 863==

( ) Deteriorated 863==

Integrity of Site:

(x) Altered 858==

( ) Unaltered 858==

(x) Original Site 858==

( ) Restored - Date: 858==

( ) Moved - Date: 858==

Threats to Site:

(x) Zoning 878==

( ) Development 878==

( ) Deterioration 878==

( ) Borrowing 878==

( ) Transportation 878==

( ) Fill 878==

( ) Dredge 878==

( ) Other 878==

II. SITE DESCRIPTION, continued.

Original Use: Priv. Residence 838== Present Use: Priv. Residence 850==

Date: +1910 844== Period: 20th Cent 845== Culture: American 840==

Architect: 872==

Builder: 874==

Style: Frame vernacular 964==

Plan Type: Rectangular 966==

Exterior Fabrics: Wood, dropside, with cornerboards 854==

Structural Systems: Wood frame 856==

Features of Structure: (942)

Window Type: DHS, 1/1, 2/2, attic louver 942==

Foundation: Concrete block piers 942==

Roof Type: Gable, intersecting 942==

Secondary Roof Structures: Shed on L, gable porch 942==

Porches & Balconies: 1 story open porch on south side 942==

Chimney Location: 942==

Materials: (882)

Chimney: 882==

Roof Surfacing: Composition shingles 882==

Ornament Exterior: 882==

Quantitative Data: (950-954)

Chimneys: 952== Dormers: 0 954== Stories: 1 950==

Other: 956==

Surroundings: Residential 864==

Relationship to Surroundings: 859==

III. PHOTOGRAPHY

Photographic Records Numbers: 860==

Contact Prints

IV. SIGNIFICANCE

Areas of Significance: Architecture

920==

Statement of Significance: (911==)

ARCHITECTURE

This one-story Frame Vernacular residence was constructed between 1905 and 1910.

The Ravenswood area contains one of the more extensive Victorian residential developments in St. Augustine, particularly along Masters Drive and Spring Street. Later infill, on previously vacant land, was largely influenced by the early 20th century Bungalow style. There are a number of post-World War II tract developments on the fringes of older neighborhoods. On the north, the 1920's Florida Boom Period development of Santa Rosa left a number of substantial Mediterranean Revival residences. Because of the sparse early development, many areas were used for agriculture and some of the old buildings still have unusually large lots. The once-famous scenic drive "Around the Horn" went through this part of town. "Ponce de Leon Springs" was a tourist attraction in this area. Ravenswood today is threatened generally by drainage problems, traffic along Masters Drive, some housing deterioration, and the zoning of residential areas into commercial categories.

HISTORY

West Augustine or, as it was earlier called, New Augustine, developed in the late 19th and early 20th centuries as a suburb to the city of St. Augustine and was not incorporated into the municipality until 1922. During the British period [1763-84], all of West Augustine was part of the plantation owned by Anglican minister, John Forbes, which the Spanish governor divided into four separate grants in the late 18th and early 19th century.[1] The northernmost and largest tract was granted in 1785 to Francisco and Juan Triay, two enterprising Minorcan farmers, and extended from Oyster Creek to present-day Theodore Street. Between 1794 and 1822 the land was the property of Corsican Jose Peso de Burgo, a prosperous local merchant, who developed some of the first commercial orange groves in Florida and constructed a plantation home.[2] West Point graduate, Col. Francis Dancy, mayor of St. Augustine from 1838-40 and son-in-law of Territorial Governor, Robert Reid, acquired the

[over]

V. BIBLIOGRAPHY

1. American State Papers; Public Lands, 5 Vols. [Washington: Duff Green, 1834], III, 708.

2. Ibid.; Biographical File, SAHS.

3. St. Johns County Courthouse, Deed Records, Book M, p. 411; Biographical File, SAHS.

4. Deed Records, Book P, p. 343; Book Q, pp. 333-334; Book S, p. 259; Book U, p. 692; St. Augustine Examiner, September 8, 1866; Wanton S. Webb, ed., Webb's Historical, Industrial and Biographical Florida, [New York, 1885], p. 200; St. Augustine City Directory,

property in 1837.[3] The section of Dancy tract generally north of King Street was purchased in 1870 by John F. Whitney of New York, a relative of Eli Whitney and founder of the St. Augustine Press. Whitney subdivided the land in 1874, thereby creating the first subdivision in West Augustine, but restricted propery owners to Northerners only. Whitney's Ravenswood developed much more slowly than planned, with most construction dating from the 20th century, although sections of earlier development remain. Ravenswood has been resubdivided into nine subdivisions between 1888 and 1926, including Greeno and Dancy Tracts and H. L. Fulger, the later bearing the name of a Black employee of the Florida East Coast Railway.[4]

1924-25.

Page 1

☐ Original
☒ Update

HISTORICAL STRUCTURE FORM
FLORIDA MASTER SITE FILE
Version 5.0 3/19

Site#8 SJ00791
Field Date 1-23-2020
Form Date 2-21-2020
Recorder # ESI

Shaded Fields represent the minimum acceptable level of documentation.
Consult the *Guide to Historical Structure Forms* for detailed instructions.

Site Name(s) (address if none) 10 ELKTON ST — Multiple Listing (DHR only) _____
Survey Project Name St. Augustine Survey Part IV — Survey # (DHR only) _____
National Register Category (please check one) ☒building ☐structure ☐district ☐site ☐object
Ownership: ☐private-profit ☐private-nonprofit ☒private-individual ☐private-nonspecific ☐city ☐county ☐state ☐federal ☐Native American ☐foreign ☐unknown

LOCATION & MAPPING

Street Number	Direction	Street Name	Street Type	Suffix Direction
10		ELKTON	LN	

Address: 10 ELKTON LN
Cross Streets (nearest / between) _____
USGS 7.5 Map Name ST. AUGUSTINE — USGS Date 1992 — Plat or Other Map _____
City / Town (within 3 miles) St. Augustine — In City Limits? ☒yes ☐no ☐unknown — County St. Johns
Township 7S — Range 29E — Section 41 — ¼ section: ☐NW ☐SW ☐SE ☐NE — Irregular-name: _____
Tax Parcel # 1117400000 — Landgrant _____
Subdivision Name _____ — Block _____ — Lot _____
UTM Coordinates: Zone ☐16 ☒17 Easting _____ Northing _____
Other Coordinates: X: _____ Y: _____ Coordinate System & Datum _____
Name of Public Tract (e.g., park) _____

HISTORY

Construction Year: 1910 ☐approximately ☐year listed or earlier ☐year listed or later
Original Use: Private Residence (House/Cottage/Ca — From (year): 1910 — To (year): 2020
Current Use: Private Residence (House/Cottage/Ca — From (year): 1910 — To (year): 2020
Other Use _____ — From (year): _____ — To (year): _____
Moves: ☐yes ☒no ☐unknown — Date: _____ — Original address _____
Alterations: ☒yes ☐no ☐unknown — Date: _____ — Nature: vinyl, windows, door, roof
Additions: ☒yes ☐no ☐unknown — Date: _____ — Nature: addn to front
Architect (last name first): _____ — Builder (last name first): _____
Ownership History (especially original owner, dates, profession, etc.)

MANNING JANETTE

Is the Resource Affected by a Local Preservation Ordinance? ☒yes ☐no ☐unknown — Describe Demolition Review

DESCRIPTION

Style: Frame Vernacular — Exterior Plan: Irregular — Number of Stories: 1
Exterior Fabric(s): 1. Vinyl 2. Drop siding 3. _____
Roof Type(s): 1. Intersecting gables 2. Flat 3. _____
Roof Material(s): 1. Composition shingles 2. _____ 3. Currently under renovatio
Roof secondary strucs. (dormers etc.) 1. _____ 2. _____
Windows (types, materials, etc.)

metal 2/2 sash & paired 1/1 sash, some obscured by metal awning

Distinguishing Architectural Features (exterior or interior ornaments)

flat roof addn on front facade, metal awning over window, small gable roof entry stoop, corner boards, currently being remodeled

Ancillary Features / Outbuildings (record outbuildings, major landscape features; use continuation sheet if needed.)

paved driveway

DHR USE ONLY	OFFICIAL EVALUATION	DHR USE ONLY
NR List Date _____ ☐Owner Objection	SHPO – Appears to meet criteria for NR listing: ☐yes ☐no ☐insufficient info — Date _____ — Init. _____ KEEPER – Determined eligible: ☐yes ☐no — Date _____ NR Criteria for Evaluation: ☐a ☐b ☐c ☐d (see *National Register Bulletin 15*, p. 2)	

HISTORICAL STRUCTURE FORM

Site #8 SJ00791

DESCRIPTION (continued)

Chimney: No. 0 Chimney Material(s): 1. _____ 2. _____
Structural System(s): 1. Wood frame 2. _____ 3. _____
Foundation Type(s): 1. Piers 2. _____
Foundation Material(s): 1. Concrete Block 2. _____
Main Entrance (stylistic details)

off-center, panel door, on open entry stoop

Porch Descriptions (types, locations, roof types, etc.)

open, entry stoop, gable roof, wood supports, accessed via concrete step to side

Condition (overall resource condition): ☐excellent ☐good ☐fair ☒deteriorated ☐ruinous

Narrative Description of Resource

This 1910 Frame Vernacular building is in deteriorated condition. It has a Intersecting gables roof, Vinyl, and is 1 story.

Archaeological Remains _____ ☐Check if Archaeological Form Completed

RESEARCH METHODS (select all that apply)

☒FMSF record search (sites/surveys)	☒library research	☐building permits	☒Sanborn maps
☒FL State Archives/photo collection	☐city directory	☐occupant/owner interview	☒plat maps
☒property appraiser / tax records	☐newspaper files	☐neighbor interview	☐Public Lands Survey (DEP)
☒cultural resource survey (CRAS)	☐historic photos	☐interior inspection	☐HABS/HAER record search

☒other methods (describe) City Staff

Bibliographic References (give FMSF manuscript # if relevant, use continuation sheet if needed)

OPINION OF RESOURCE SIGNIFICANCE

Appears to meet the criteria for National Register listing individually? ☐yes ☒no ☐insufficient information
Appears to meet the criteria for National Register listing as part of a district? ☐yes ☒no ☐insufficient information

Explanation of Evaluation (required, whether significant or not; use separate sheet if needed)

There are no known significant architectural associations or features and as such it is not individually eligible. It would not contribute to a district due to alterations & front addition.

Area(s) of Historical Significance (see *National Register Bulletin 15*, p. 8 for categories: e.g. "architecture", "ethnic heritage", "community planning & development", etc.)

1. _____ 3. _____ 5. _____
2. _____ 4. _____ 6. _____

DOCUMENTATION

Accessible Documentation Not Filed with the Site File - including field notes, analysis notes, photos, plans and other important documents

1) Document type _____ Maintaining organization _____
Document description _____ File or accession #'s _____

2) Document type _____ Maintaining organization _____
Document description _____ File or accession #'s _____

RECORDER INFORMATION

Recorder Name Patricia Davenport-Jacobs Affiliation Environmental Services, Inc.
Recorder Contact Information 7225 Financial Way, Suite 100, Jacksonville, FL 32256/9044702200/9044702112
(address / phone / fax / e-mail)

Required Attachments

❶ USGS 7.5' MAP WITH STRUCTURE LOCATION CLEARLY INDICATED
❷ LARGE SCALE STREET, PLAT OR PARCEL MAP (available from most property appraiser web sites)
❸ PHOTO OF MAIN FACADE, DIGITAL IMAGE FILE
When submitting an image, it must be included in digital AND hard copy format (plain paper grayscale acceptable). Digital image must be at least 1600 x 1200 pixels, 24-bit color, jpeg or tiff.

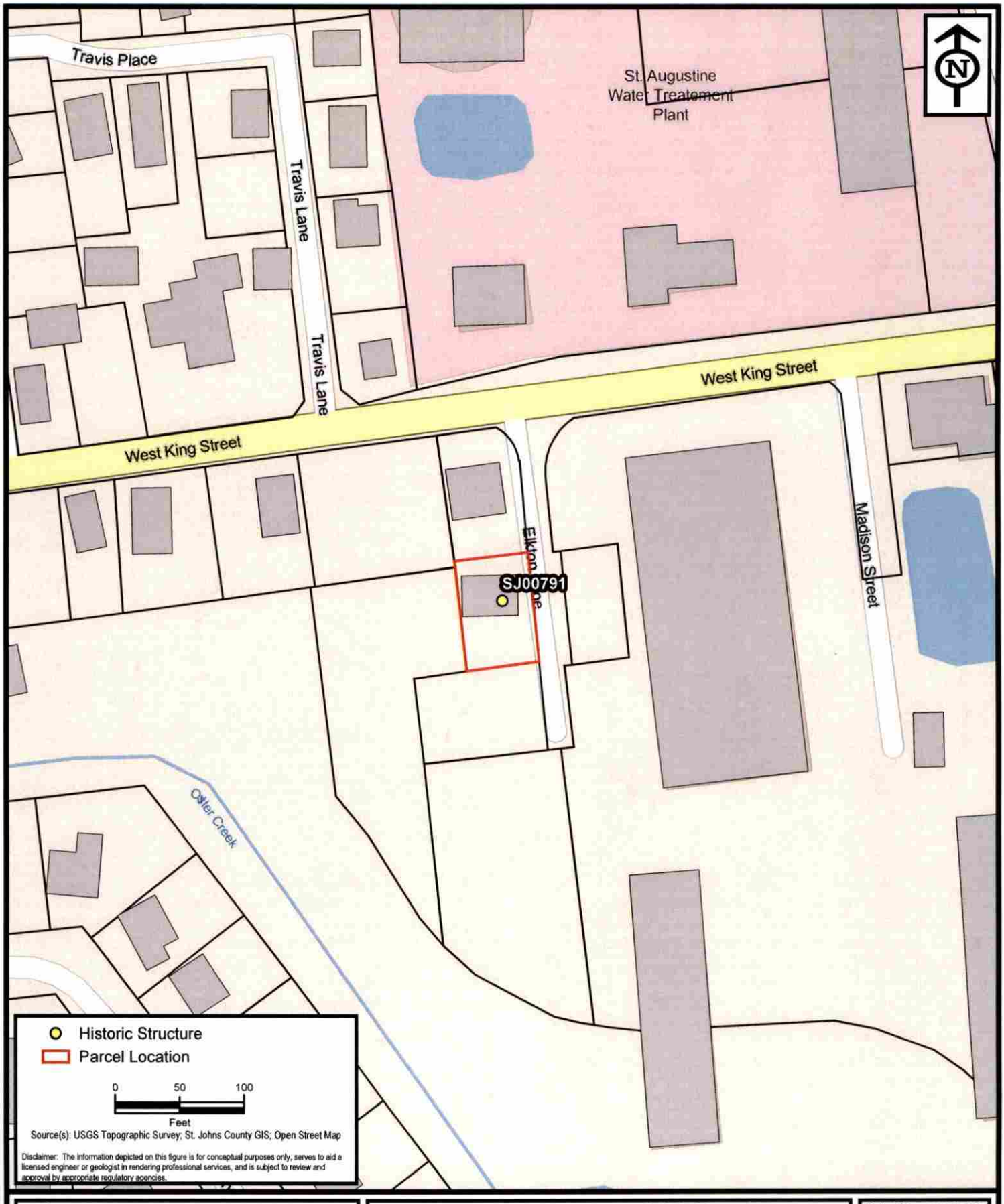

ENVIRONMENTAL SERVICES, INC.
A Terracon COMPANY
7220 FINANCIAL WAY, SUITE 100 JACKSONVILLE, FL 32256
PH. (904) 470-2200 FAX (904) 470-2112

Parcel Location - SJ00791

St. Augustine Survey - Part 4

St. Johns County, Florida

Project No.	HK197193
Date	Feb 2020
Drawn By	AA
Checked By	JRN
Approved By	PDJ
Figure No.	1

Path: N:\Projects\2019\HK197193\Working Files\Graphics\fig\West Augustine\West Augustine.aprx Date: 2/21/2020 12:16 PM

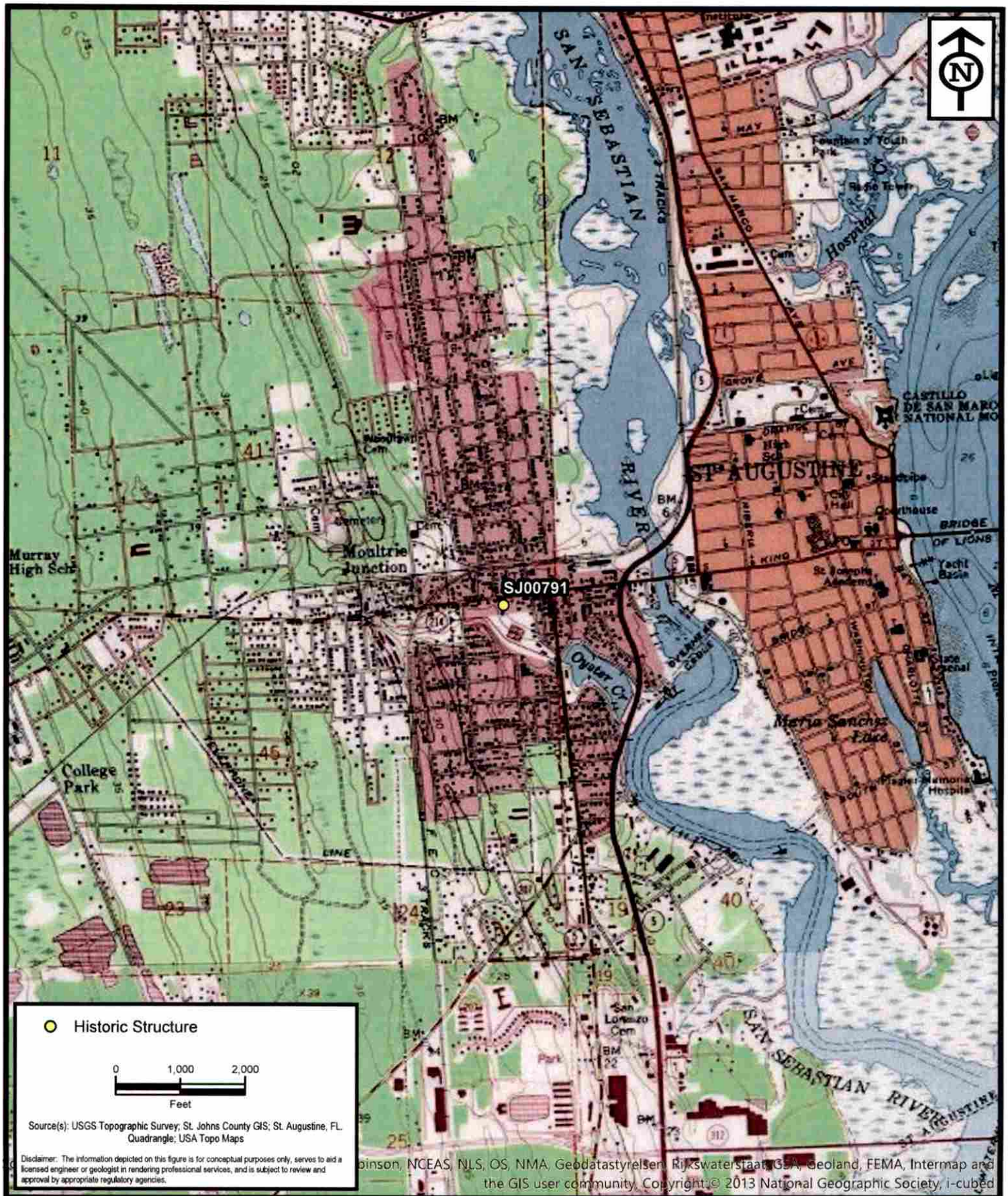

ENVIRONMENTAL SERVICES, INC.
A Terracon COMPANY
7220 FINANCIAL WAY, SUITE 100 JACKSONVILLE, FL 32256
PH. (904) 470-2200 FAX (904) 470-2112

Project Location - SJ00791

St. Augustine Survey - Part 4

St. Johns County, Florida

Project No.	HK197193
Date	Feb 2020
Drawn By	AA
Checked By	JRN
Approved By	PDJ
Figure No.	**2**

Path: N:\Projects\2019\HK197193\Working Files\Graphics\fig\West Augustine\West Augustine.aprx Date: 2/21/2020 12:16 PM

10
Elktm

KODAK SAFETY FILM
11A
12

SANBORM MAPS
10 Elkton Lane

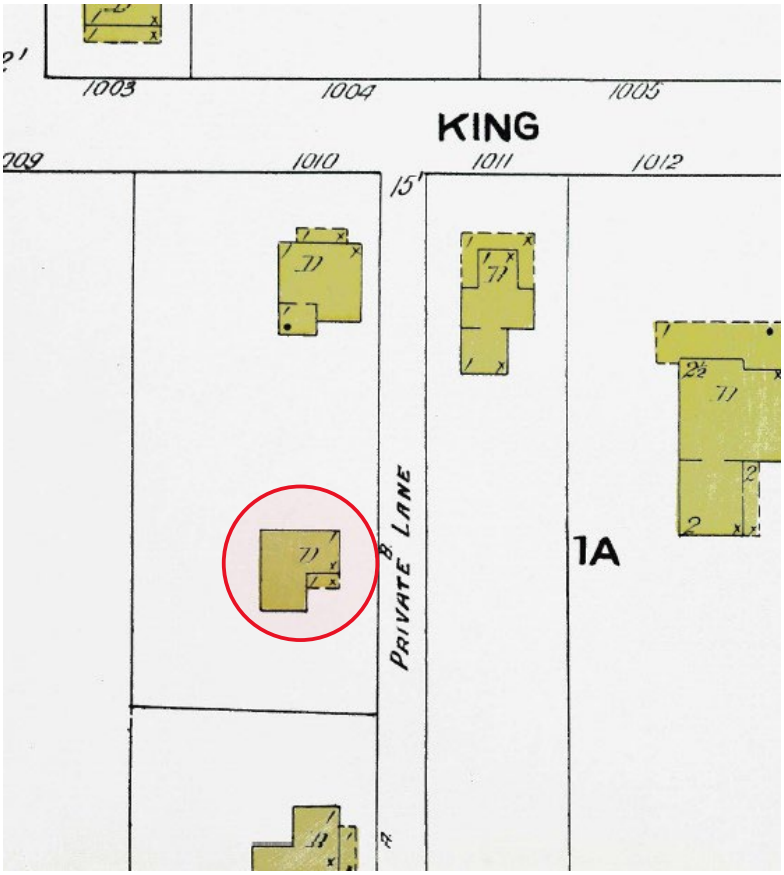

1910

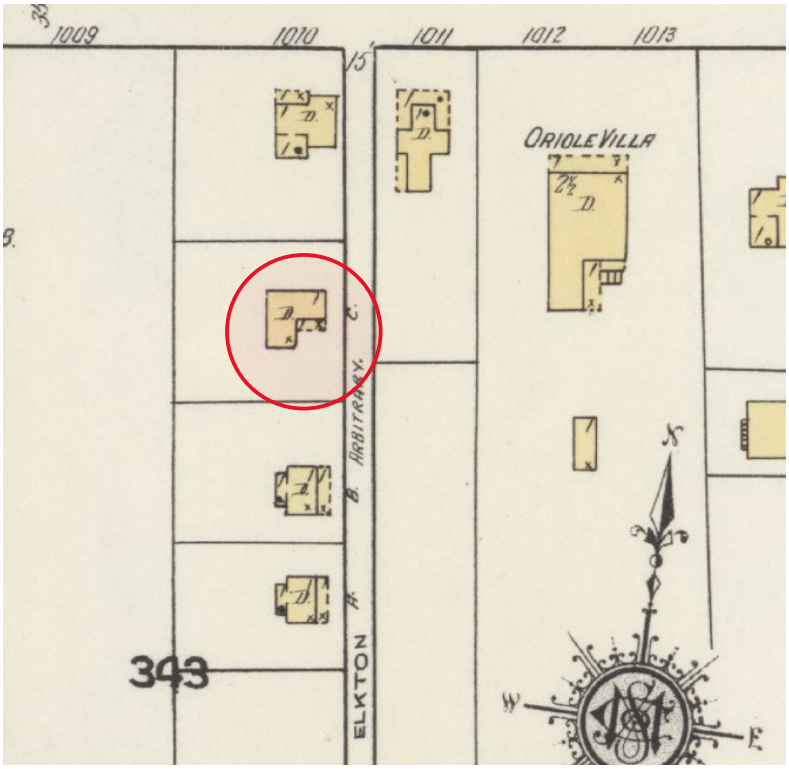

1917

SANBORM MAPS
10 Elkton Lane

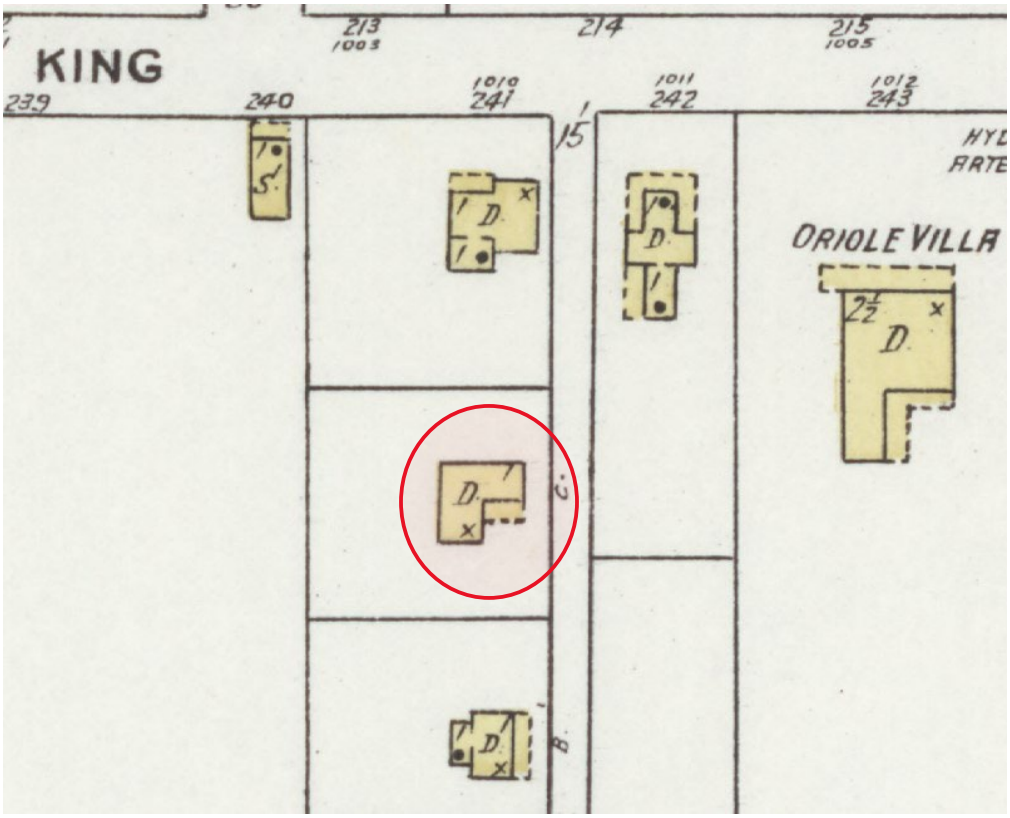

1924

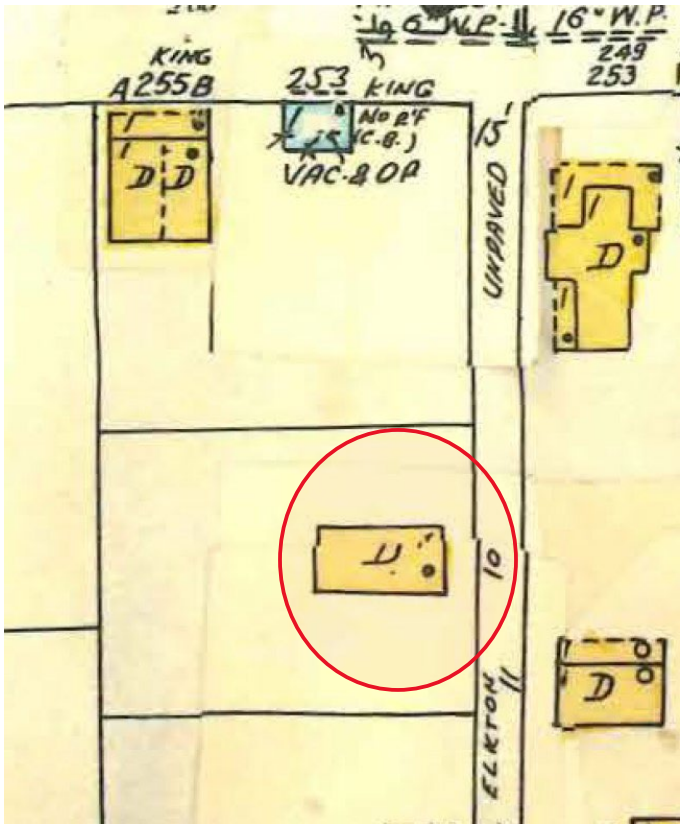

1930 updated to 1960

10 Elkton Lane (c. 1905-1910)
SAHS POLK CITY DIRECTORY RESEARCH

DATE(S)	NAME	SYMBOLS	PROFESSION
+1927	Abraham Gainer (w: Anna)	(c)	Laborer
1930	Mary J. Harris	(c)	Domestic
1937	Elijah J. Brooks	(c)	Not Listed
1940	VACANT		
1949	Edward Halyard (w: Rosa B.)	(c)	Laborer
1955	Edward Halyard (w: Rosa B.)	(o)	Fisherman
1960	Edward Halyard (w: Rosabelle B.)	(o)	Fisherman
1965	Herman Lawton (w: Rosabelle)	(o)	Laborer, City Streets Department
1970	Herman Lawton (w: Rosabelle)	(o)	Laborer, City Streets Department
1975	Herman Lawton (w: Rosabelle)	(o)	Laborer, City Streets Department
1980	Herman Lawton (w: Rosabelle)	(o)	Retired
1985	Herman Lawton (w: Alvecia)	(o)	Retired

\+ First entry found for this address
(o) Owner
(c) Colored

CITY OF ST. AUGUSTINE
HISTORIC ARCHITECTURAL REVIEW BOARD APPLICATION

Certificate of Demolition (Full)

Case Number: HP2026-0013 **Meeting Date: Thursday, March 19, 2026**

1. NAME OF APPLICANT: Leanna Freeman
   Business (if applicable):
   Address: 255 West King St.
   City: St. Augustine State: FL Zip Code: 32084
   Daytime Telephone: Available upon request E-Mail Address: Available upon request

2. NAME OF PROPERTY OWNER: Victor Jerome Green
   Business (if applicable):
   Address: 158 Zancara St.
   City: St. Augustine State: FL Zip Code: 32084
   Daytime Telephone: Available upon request E-Mail Address: Available upon request

3. PROJECT LOCATION: 10 ELKTON LN, Saint Augustine, FL, 32084

4. LEGAL DESCRIPTION: (2) DANCY TRACT S85FT OF LOT 1 BLK 18 OR5103/1705

5. SCOPE OF WORK: to demolish a residential building, constructed. c. 1905-1910, that is recorded in the Florida Master Site File and not located in a district.

Information attached by applicant includes:

- Application Agreement
- Photographs of Existing Conditions
- Statement Regarding Replacement

Received February 26, 2026
Planning and Building Dept.

HARB APPLICATION AGREEMENT

In filling out this application:

- **I understand that it becomes part of the Public Record of the City of St. Augustine and hereby certify that all information contained herein is accurate to the best of my knowledge.**
- **I further understand that if this application is for an *Opinion of Appropriateness*, I must still obtain a *Certificate of Appropriateness* before applicable permits can be issued for project work to begin. If this application is for a *Certificate of Appropriateness, Demolition*, or *Partial Demolition*, and it is approved, I am required to obtain other development approvals, archaeological review, and a building permit as necessary prior to starting project work.**
- **Once a hearing date has been set and a legal notice has been published or posted, I, or an authorized representative, must be prepared to present the request at the scheduled hearing date. The cost of subsequent hearings requiring re-noticing due to continuance will be assessed to the applicant.**
- **I have been made aware that applications must be sufficiently complete at the time of submittal or may be delayed to a future meeting. Relevant information necessary for application review shall include but not be limited to the items referenced in the "Plan Requirements" section of the Architectural Guidelines for Historic Preservation (AGHP) depending on the scope and scale of the project. The minimum application requirements are marked as required submittal documents in this online application. Contact Planning Staff if the project is unique and needs to be addressed in a different manner. Minor details may be submitted in the portal up to 10 days before the meeting and HARB will determine if additional materials may be presented at the meeting.**

All applicants/owners of record must sign the application agreement. If the property applicant/owner is a governmental agency; licensed business or company; incorporated organization; or an administered estate, an authorized agent may sign. If the applicant is different than the property owner, the application must be signed by both parties. An Authorization Form signed by the property owner(s) and notarized, must be submitted only in the absence of the property owner's signature or where an authorized agent signs in lieu of the property owner.

Project Address: 10 Elkton Lane

Applicant's Name: Leanna Freeman Applicant's Signature: [signature]

Owner's Name: Victor Green Owner's Signature: X [signature]

Owner's Name: _____ Owner's Signature: _____

Owner's Name: _____ Owner's Signature: _____

(Can add additional signature page if needed)

Florida Statute 286.0105 states that a person appealing any decision by this board at any meeting regarding this application may need a verbatim record of the proceedings which includes testimony and evidence upon which the appeal is to be based.

Received February 26, 2026
Planning and Building Dept.

Received February 26, 2026
Planning and Building Dept.

Received February 26, 2026
Planning and Building Dept.

Received February 26, 2026
Planning and Building Dept.

Received February 26, 2026
Planning and Building Dept.

Received February 26, 2026
Planning and Building Dept.

Received February 26, 2026
Planning and Building Dept.

Received February 26, 2026
Planning and Building Dept.

Received February 26, 2026
Planning and Building Dept.

Received February 26, 2026
Planning and Building Dept.

Received February 26, 2026
Planning and Building Dept.

Received February 26, 2026
Planning and Building Dept.

Received February 26, 2026
Planning and Building Dept.

Received February 26, 2026
Planning and Building Dept.

Received February 26, 2026
Planning and Building Dept.

Leanna Freeman
255 West King St.
St. Augustine, FL 32084

Re: 10 Elkton Lane
Certificate of Demolition Application

February 26, 2026

PROPOSED REPLACEMENT

NONE- applicant, who is also adjacent property owner intends to leave the property as vacant treed land.

CITY OF ST AUGUSTINE EST. 1565

CITY OF ST. AUGUSTINE HISTORIC ARCHITECTURAL REVIEW BOARD
STAFF REPORT AND RECOMMENDATION
Prepared for March 19, 2026 Meeting

Application HP2026-0011 Address: 130 St. George Street

Applicant: Duncan Dailey

Property Owner: Old City Leasing LLC

Project description: To replace the existing storefront with a new storefront system; and, to install a handicap access ramp.

Architectural Style:	Mediterranean Revival	Florida Master Site File:	SJ01909
National Register:	St. Augustine NRHD: Contributing	Construction date:	c. 1894-1899
Archaeology Zone:	IA	Zoning District:	HP-2
Parcel number:	1976300000		
Agenda Item:	6(a)	Previous Action(s):	COA 2001-0297

STAFF SUMMARY AND ANALYSIS:

1. This Mediterranean Revival commercial structure is located on the west side of St. George Street on the block between Treasury and Hypolita Streets in the Historic Preservation-Two (HP-2) zoning district. The building, formally addressed 128 St. George Street, is designated as contributing to the St. Augustine National Register Historic District and currently features three individual storefronts. The central storefront, 130 St. George Street, is the primary subject of this application.
2. The applicant is seeking to replace the existing wood frame storefront with brick bulkhead with a new aluminum storefront system and construct a handicap access ramp in front of the entry door that the applicant intends to match at the 128 St. George Street unit as well.
3. A Certificate of Appropriateness (COA) was approved for the existing storefront at 130 St. George Street in April of 2001. The scope of work for that previous COA included installation of a new fabric awning and a new entry door for the unit which appears to have had its door removed prior to 1980. A door is not extant on this central unit in the 1980 Florida Master Site File photograph. The plans for the door and awning approved in 2001 are attached to this staff report for reference.
4. While no clear justification for the update storefront was provided, a wall framing plan was submitted under the building permit application showing instillation of a new steel header beam and steel support columns set in new footings around the storefront opening. The applicant should clarify whether this work is necessary for the structural stability of the building or only proposed in preparation of the proposed new aluminum storefront system.
5. The Architectural Guidelines for Historic Preservation (AGHP) recommends that replacement storefronts be consistent with the architectural and historic character of the building and streetscape. The proposed aluminum storefront system, finished in black to match the existing paint on the storefront, is a modern feature that is not consistent with time-period of the structure or the historic character of the streetscape within the HP-2 zoning district. Plans appear to indicate that the brick bulkhead will remain with the new aluminum system; however, it is unclear whether the existing transom above the door will remain.
6. Some metal storefront systems have been approved by the HARB to replace existing wood storefronts on other commercial structures in HP-2, but only if the aluminum framing can be encased in wood to match the original storefront or be consistent with AGHP requirements. Adjacent storefronts at 128 and 132 St. George Street have been altered over time but still feature the wood framing and doors consistent with the building's architectural style and period.
7. Due to potential trip hazards, Public Works staff have confirmed that installation of proposed handicap access ramps will not be approved unless the applicant can provide clear evidence that the ramps would not impose on the St. George Street right-of-way. The only graded accessibility ramps allowing access from St. George Street appear to be storefronts that are inset from the front plane of the building, allowing the ramp to reach the entry door threshold without projecting out into St. George Street.
8. This building may qualify for waivers or exceptions to accessibility requirements due to its status as a contributing building and/or the potential hardship of installing accessibility features on the building. The applicant should explore these options since the proposed ramps appear to be infeasible.

STAFF RECOMMENDATION:

Based on a review of the AGHP, and without the support of evidence to the contrary, staff finds that the board can **CONTINUE** a Certificate of Appropriateness at **130 St. George Street** to allow the applicant time to modify the proposed storefront system in keeping with AGHP requirements as recommended by the HARB, to provide drawings that more clearly depict the visual impacts of the new storefront system, and to explore alternatives to the handicap access ramp which may not be permissible as proposed.

Candice Seymour

Candice Seymour, Historic Preservation Planner

SUMMARY SCOPE OF WORK:

1. Install new YKK AP aluminum storefront system:
    a. Install new steel header and posts
        i. New concrete footers
    b. New metal storefront door and aluminum framing in black finish
        i. 2" framing width
2. Install concrete handicap access ramp (may be infeasible per Public Works):
    a. 12" run for every 1" of rise
    b. Finished with coquina shell

CITY CODES/DESIGN GUIDELINES:

ARCHITECTURAL GUIDELINES FOR HISTORIC PRESERVATION

Secretary of the Interior's Standard's for Rehabilitation 2, 3, 4, 6, 9, and 10 apply.

2. Retention of Distinguishing Architectural Character
3. Recognition of Historic Period
4. Retention of Significant Later Alterations and Additions
6. Repair or Replacement of Deteriorated or Missing Architectural Features Based on Historic Evidence
9. Compatible Contemporary Design for New Alterations and Additions

Storefronts

Do...

- Retain and repair existing storefronts, including windows, sash, doors, transoms and decorative features where such features contribute to the architectural and historic character of the building.
- Evaluate the overall condition of storefront materials to determine whether more than protection and maintenance are required.
- Repair storefronts by reinforcing the historic materials. Repairs will also generally include the limited replacement in kind, or with compatible substitute materials, of those extensively deteriorated or missing parts of storefronts where there are surviving prototypes such as transoms, kick plates and pilasters.
- Where original or early storefronts no longer exist or are too deteriorated to save, retain the commercial character of the building through contemporary design which is compatible with the scale, design, materials, color and texture of the historic buildings; or an accurate restoration of the storefront based on historic research and physical evidence.

Don't...

- Remove or radically change storefronts and their features which are important in defining the overall historic character of the building so that, as a result, the character is diminished.
- Introduce a storefront or new design element on the ground floor, such as an arcade, which alters the architectural and historic character of the building and its relationship with the street or its setting, or which causes destruction of significant historic fabric.
- Use materials which detract from the historic or architectural character of the building.
- Alter the entrance through a significant storefront.
- Fail to provide adequate protection of materials on a cyclical basis so that deterioration of storefronts results.
- Strip storefronts of historic material such as wood, cast iron, terra cotta, pigmented structural glass or brick.
- Replace an entire storefront when repair of materials and limited replacement of its parts are appropriate.
- Use substitute material for the replacement parts that does not convey the same visual appearance as the surviving parts of the storefront or that is physically or chemically incompatible.
- Remove a storefront that is unrepairable and not replace it; or replace it with a new storefront that does not convey the same visual appearance.
- Create a false historical appearance because the replaced storefront is based on insufficient historical, pictorial, and physical documentation.
- Introduce a new design that is incompatible in size, scale, material, and color.

Post-1821

Storefronts on post-1821 commercial buildings should be consistent with the architectural and historic character of the building and the streetscape.

Accessibility

The Florida Accessibility Code for Building Construction contains detailed requirements implementing both the federal Americans with Disabilities Act of 1990 and the more stringent Florida Americans with Disabilities Accessibility Implementation Act of 1993.

Historic sites and buildings, replicas, reproductions and reconstructions are not exempt from these regulations. However, historic properties and new buildings can generally be made accessible while preserving their architectural character through careful planning and sensitive design.

Do...

- Review the historical significance of a property and identify character-defining features.
- Assess the property's existing and required level of accessibility.
- Evaluate accessibility options within a preservation context.
- Comply with barrier-free access requirements in such a manner that character-defining spaces, features and finishes are preserved.
- Work with local disability groups, access specialists and historic preservation specialists to determine the most appropriate solution to access problems.
- Provide barrier-free access that promotes independence for the disabled person to the highest degree practical, while preserving significant historic features.
- Provide barrier-free access through removable or portable, rather than permanent, ramps
- Design new or additional means of access that are compatible with the historic property and its setting.
- If providing barrier-free access threatens the integrity of an historic property, consult with the State Historic Preservation Officer (SHPO) about using alternative minimum requirements. These alternative minimum requirements have been established for qualified historic properties that cannot be made physically accessible without threatening or destroying their significance. Qualified historic properties include those listed or eligible to be listed in the National Register of Historic Places, those in locally designated historic preservation zoning districts HP-1 through HP-5, or those abutting HP-1, HP-2 or HP-3. Owners of qualified historic properties must first consult with the SHPO before using the alternative minimum requirements. If the SHPO determines that compliance with the full accessibility requirements would threaten or destroy the significance of the building, then the alternative minimum requirements may be used.

  The Florida Board of Building Codes and Standards of the Department of Community Affairs may grant individual modifications to, or exceptions from, the literal requirements of the Florida Accessibility Code for Building Construction. These waivers or exceptions must be based on a determination of unnecessary or extreme hardship. The waivers shall not violate federal accessibility laws or regulations, and must be reviewed by the Handicapped Accessibility Advisory Council. Criteria for reviewing applications for waivers are established by Florida Administrative Code.

Don't...

- Undertake code-required alterations before identifying those spaces, features or finishes which are character-defining and must therefore be preserved.
- Alter, damage or destroy character-defining spaces, features and finishes while making modifications to a building or site to comply with barrier free access.
- Make changes to buildings without first seeking expert advice from access specialists and historic preservationists to determine solutions.
- Install permanent access ramps that damage or diminish character-defining spaces.
- Provide access modifications that do not provide a reasonable balance between independent, safe access and preservation of historic features.
- Design new or additional means of access without considering the impact on the historic property and its setting.
- Provide barrier free access which destroys significant features of an historic property without first consulting the State Historic Preservation Officer.

LIST OF ATTACHMENTS:

1. Staff Photographs
2. Florida Master Site File
3. Storefront Plans approved April 2021

Staff Photographs
130 St. George Street

Front (east) Elevation

Staff Photographs
130 St. George Street

Front (east) Elevation

Staff Photographs
130 St. George Street

Front (east) Elevation

Staff Photographs
130 St. George Street

Front (east) Elevation

Staff Photographs
130 St. George Street

Door Details

Staff Photographs
130 St. George Street

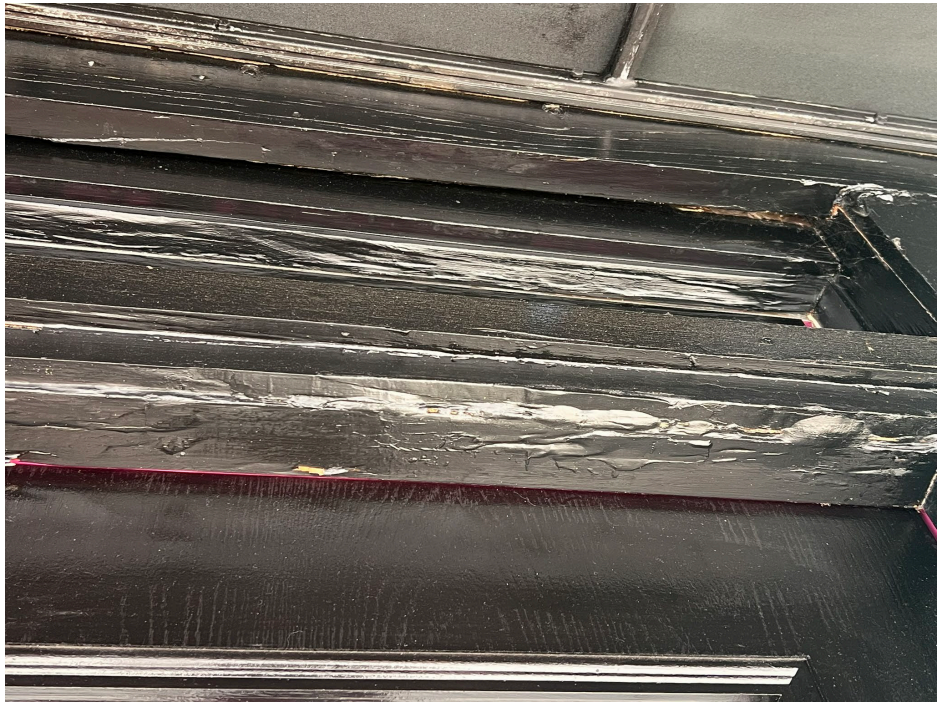

Door Details

Staff Photographs
130 St. George Street

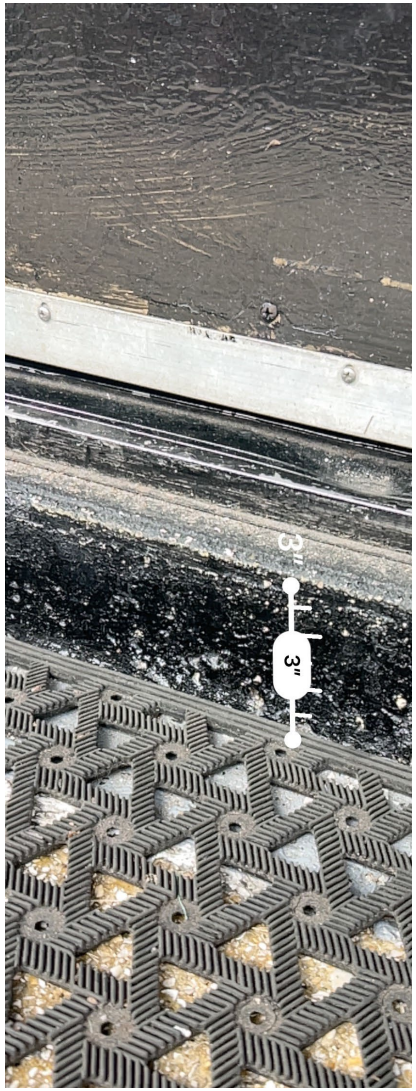

Ramp Location

Staff Photographs
130 St. George Street

Window Details

Staff Photographs
130 St. George Street

Window Details

Staff Photographs
130 St. George Street

View of whole building from the northeast

Staff Photographs
130 St. George Street

Unit 128

Staff Photographs
130 St. George Street

Unit 132

Staff Photographs
130 St. George Street

Unit 132

SEE SITE FILE STAFF FOR ORIGINAL PHOTO(S) OR MAP(S)

FLORIDA MASTER SITE FILE
HISTORIC ST. AUGUSTINE PRESERVATION BOARD
HISTORIC PROPERTIES INVENTORY FORM

I. LOCATION & LEGAL DESCRIPTION

FDAHRM 802== Site No. 8SJ1909 1009==

Site Name: 128-132 St. George Street 830== Survey Date: 7809 820==

Address: 128-132 St. George Street, St. Augustine, FL 32084 905==

Instructions for Locating:

813== County: St. Johns 808==

Location: City of St. Augustine (subdivision) 14 (block) 2&4 (expart leased to city) (lot) 868==

868==

Owner of Site: Name: Genovar, May (Estate) c/o Genova, Eugenia;

Address: 271 St. George Street

St. Augustine, FL 32084 902==

Occupant or Manager: 904==

Type of Ownership: Private 848== Zoning: HP-2

NR Classification Category: Building 916== Recording Date: 832==

UTM: 17 (zone) 469760 (easting) 3306860 (northing) 890== Location: T07S (T) R30E (R) S18 (S) 812==

Map Reference: USGS St. Augustine, 7.5 MIN 1956 (PR 1970) 809==

Recorder: Name & Title: Nolan, David (Historic Sites Specialist);

Address: H.S.A.P.B. 818==

II. SITE DESCRIPTION

Condition of Site:

( ) Excellent 863==
(X) Good 863==
( ) Fair 863==
( ) Deteriorated 863==

Integrity of Site:

(X) Altered 858==
( ) Unaltered 858==
(X) Original Site 858==
( ) Restored - Date: 858==
( ) Moved - Date: 858==

Threats to Site:

( ) Zoning 878==
( ) Development 878==
( ) Deterioration 878==
( ) Borrowing 878==
( ) Transportation 878==
( ) Fill 878==
( ) Dredge 878==
( ) Other 878==

II. SITE DESCRIPTION, continued.

Original Use: Commercial 838== Present Use: Commercial 850==

Date: +1899 844== Period: 19th cent. 845== Culture: American 840==

Architect: 872==

Builder: 874==

Style: Mediterranean Revival 964==

Plan Type: Rectangular 966==

Exterior Fabrics: Brick, running

854==

Structural Systems: Masonry, brick 856==

Features of Structure: (942)

Window Type: Plate glass, fixed 942==

Foundation: Brick wall 942==

Roof Type: Flat, parapet 942==

Secondary Roof Structures: 942==

Porches & Balconies:

942==

Chimney Location: 942==

Materials: (882)

Chimney: 882==

Roof Surfacing: Built-up 882==

Ornament Exterior: Decorative brick frieze

882==

Quantitative Data: (950-954)

Chimneys: 952== Dormers: 954== Stories: 1 950==

Other: 956==

Surroundings: Commercial 864==

Relationship to Surroundings: On commercial portion of the street leading to restored area.

859==

III. PHOTOGRAPHY

Photographic Records Numbers: 860==

Contact Prints

IV. SIGNIFICANCE

Areas of Significance: Architecture, Commerce, Real Estate, Minorcans, Families, Women, Art 920==

Statement of Significance: (911==)

ARCHITECTURE

This one-story Mediterranean Revival building at 128-132 St. George Street was constructed between 1894 and 1899. The stucco finish and flat parapet roof create the Mediterranean appearance. A decorative brick frieze adds a distinctive touch. The building has been continuously occupied by commercial enterprises. It is on a street leading into the restored area.

The section of the colonial city of St. Augustine bounded on the north by Hypolita Street and on the south by Cathedral Place is today an area that combines a commercial business district, tourist attractions, and some residential units. The buildings date from colonial times to the present, with a sprinkling from each period, with no one style having a visual dominance in the area. The neighborhood has been touched by restoration efforts over the years. Some older buildings have been remodeled and some new ones have been constructed in the St. Augustine Colonial Revival style. The ambiance of the area is different than that found in the restored area just to the north. This area has narrow colonial street patterns and six colonial buildings which are scattered along five streets. But as a business district it is faced with modern problems of traffic and parking--the result being that large areas have been leveled and blacktopped for parking lots. The streetscape has been damaged by the destruction of landscaping, and the putting of backs of buildings on public display. A once-famous colonial stretch on the east side of Charlotte Street, for instance, is now mainly taken up with the backs of motels. The eastern section of this area was burned over by major fires in 1887 and 1914, leaving developments in later architectural styles in an area earlier known for its colonial ambiance. The area is bordered on the west by the Ponce de Leon Hotel (now Flagler College) and on the east by the seawall and bayfront, long a famous scenic attraction. It is part of the National Landmark District, and listed on the National Register of Historic Places.

HISTORY

This section of the walled colonial city traditionally has been one of the main commercial and hotel districts in St. Augustine since the mid-19th century. The area was first developed in the late 17th century as the colonial community expanded northward towards the newly-completed Castillo de

(over)

V. BIBLIOGRAPHY

1. Juan Jose Elixio de la Puente, "Plano . . . de la Plaza de San Agustin," January 22, 1764; Mariano de la Rocque, "Plano Particular de la Ciudad de San Agustin," April 25, 1788; East Florida Papers, Escrituras, 1784-1821; John Bostwick, et. al, "A Sub-Surface Archaeological Survey of the Northern Colonial City," (St. Augustine: HSAPB, 1978); Albert Manucy, The Houses of St. Augustine, 1565-1821 (St. Augustine, 1962), pp. 22-25 and 41-47.

2. Anon., "Copy of a Plan of the City of St. Augustine," 1833; 1885 and 1894 Birds-Eye Views; St. Augustine Record, April 7, 1914; July 4, 1937;

San Marcos. The entire city was destroyed in 1702 by the invading South Carolinians, but by mid-century, the Rosario defense line had been erected along present-day Cordova Street and numerous residences had been rebuilt on all streets, particularly between Charlotte Street and the bay. By the end of the colonial period (1821), this area was one of the most densely populated in the city, and a number of buildings from the Spanish era have survived: Fornell, Sanchez, Burt, Joaneda, and Perez-Snow Houses.(1) In the Territorial period, the huge Florida House was constructed along Treasury Street between Charlotte and St. George Streets, and the Methodist Church was located immediately to the north on Charlotte Street. The post-Civil War years brought intense commercialization to St. George, Charlotte, and part of Hypolita Streets. The Magnolia Hotel on St. George Street and the County Courthouse on Charlotte Street were also constructed in the late 19th century. By this time Spanish Street had become one of several exclusive Black residential neighborhoods outside Lincolnville with its school on the Dragoon Barracks lot and its own church south of the Magnolia Hotel. The bayfront was a residential area with several boarding houses, and a bathhouse and yacht club projected into the bay from the seawall. This section of the colonial city, particularly the blocks between the bay and St. George Street, was ravaged by major fires in 1887 and 1914, and consequently it has the lowest percentage of 19th century buildings within the old city. The older structures lie along Spanish Street and the west side of St. George Street south of Treasury Street, two areas untouched by the devastating fires.(2)

This building at 128-132 St. George Street has been occupied by various commercial ventures over the years. A few of the businesses operating from 128 St. George Street include: Arnold Kurth's Curiosity Shop, (Kurth's Island on the way to Vilano Beach is named for the Kurth family.); Bennett and Company--Shoes; and another shoe store operated by Emanuel J. Masters.(3) In number 130, the Vermont-Florida Realty Company functioned. The company, run by Noel W. Mier, George F. Grey, and C. B. Miller established Vermont Heights near Elkton. Other merchants included: Joseph T. Pacetti; Herbert J. Usina, hardware; and the Montgomery Sisters, Gertrude and May who operated a Leather Goods shop.(4) The store at 132 was also occupied by Joseph T. Pacetti who ran a hardware company with T. A. Pacetti. Later Winifred E. and Minerva E. Muir opened a hand craft shop.(5) The store is currently occupied by Moeller's Jewelry Store. William Moeller is a member of the Historic Architectural review board. He and his wife, Rubylee have restored an old house on St. George Street. Members of the Masters and Usina families descend from Minorcan colonists and members of the Pacetti family from Italian colonists all who migrated to St. Augustine from New Smyrna in 1777.

Prior to the erection of this building, the site was occupied by a two-story stone building on the eastern part of the lot which housed a "Book Store" and a "Palmetto Works". A "Boarding House" stood on the west end. By 1893 the stores in the stone building are listed as "curios" and "mill'y".

ARCHAEOLOGY

For archaeological significance of the walled colonial city see Master Site File Form 8SJ10.

February 5, 1950; May 14, 1950; Sanborn Fire Insurance Map, 1884-1958; St. Augustine City Directory, 1885, 1899, 1904.

3. City Directory, 1904, 1907, 1927-28, 1934.
4. Ibid., 1904, 1911-12, 1914-15, 1927-28.
5. Ibid., 1907, 1924-25, 1927-28, 1930.
6. Sanborn Fire Insurance Maps, 1884, 1888, 1893, 1899.

☐ Original
☒ Update

HISTORICAL STRUCTURE FORM
FLORIDA MASTER SITE FILE
Version 4.0 1/07

Site #8 SJ01909
Field Date 5-3-2016
Form Date 5-3-2016
Recorder #

Shaded Fields represent the minimum acceptable level of documentation.
Consult the *Guide to Historical Structure Forms* for detailed instructions.

Site Name(s) (address if none) 128-132 St George Street — Multiple Listing (DHR only)
Survey Project Name Inv. of Structures within St. Augustine NRHD — Survey # (DHR only)
National Register Category (please check one) ☒building ☐structure ☐district ☐site ☐object
Ownership: ☐private-profit ☐private-nonprofit ☐private-individual ☒private-nonspecific ☐city ☐county ☐state ☐federal ☐Native American ☐foreign ☐unknown

LOCATION & MAPPING

Address:	Street Number	Direction	Street Name	Street Type	Suffix Direction
	128		St George	Street	

Cross Streets (nearest / between)
USGS 7.5 Map Name ST. AUGUSTINE — USGS Date 1956 — Plat or Other Map
City / Town (within 3 miles) St. Augustine — In City Limits? ☒yes ☐no ☐unknown — County St. Johns
Township 7S — Range 30E — Section 18 — ¼ section: ☐NW ☐SW ☐SE ☐NE — Irregular-name:
Tax Parcel # 1976300000 — Landgrant
Subdivision Name — Block — Lot
UTM Coordinates: Zone ☐16 ☒17 Easting ☐☐☐☐☐☐ Northing ☐☐☐☐☐☐☐
Other Coordinates: X: Y: Coordinate System & Datum
Name of Public Tract (e.g., park)

HISTORY

Construction Year: 1899 ☐approximately ☐year listed or earlier ☐year listed or later
Original Use Commercial — From (year): — To (year):
Current Use Commercial — From (year): — To (year):
Other Use — From (year): — To (year):
Moves: ☐yes ☒no ☐unknown Date: Original address
Alterations: ☒yes ☐no ☐unknown Date: Nature storefront
Additions: ☐yes ☐no ☒unknown Date: Nature
Architect (last name first): Builder (last name first):
Ownership History (especially original owner, dates, profession, etc.)

Is the Resource Affected by a Local Preservation Ordinance? ☒yes ☐no ☐unknown Describe

DESCRIPTION

Style Commercial — Exterior Plan Rectangular — Number of Stories 1-2
Exterior Fabric(s) 1. Brick 2. 3.
Roof Type(s) 1. Flat 2. 3. parapet
Roof Material(s) 1. Composition roll 2. 3. brick
Roof secondary strucs. (dormers etc.) 1. 2.
Windows (types, materials, etc.) large single pane store front windows (transom on 132); covered transom on 128-130

Distinguishing Architectural Features (exterior or interior ornaments) 132 has more traditional storefront with round metal posts and recessed entry; sawtooth brick work and corbelled parapet

Ancillary Features / Outbuildings (record outbuildings, major landscape features; use continuation sheet if needed.)

DHR USE ONLY	OFFICIAL EVALUATION	DHR USE ONLY
NR List Date ☐Owner Objection	SHPO – Appears to meet criteria for NR listing: ☐yes ☐no ☐insufficient info Date Init. KEEPER – Determined eligible: ☐yes ☐no Date NR Criteria for Evaluation: ☐a ☐b ☐c ☐d (see *National Register Bulletin 15*, p. 2)	

HISTORICAL STRUCTURE FORM

Site #8 SJ01909

DESCRIPTION (continued)

Chimney: No.____ Chimney Material(s): 1. _____ 2. _____
Structural System(s): 1. Brick 2. _____ 3. _____
Foundation Type(s): 1. Slab 2. _____
Foundation Material(s): 1. Concrete, Generic 2. _____
Main Entrance (stylistic details) single wood door with rectangular window; 132 recessed entry; 128 and 130 flush with facade
Porch Descriptions (types, locations, roof types, etc.) _____

Condition (overall resource condition): ☐excellent ☒good ☐fair ☐deteriorated ☐ruinous
Narrative Description of Resource See original form by David Nolan for additional history

Archaeological Remains _____ ☐Check if Archaeological Form Completed

RESEARCH METHODS (check all that apply)

☒FMSF record search (sites/surveys) ☒library research ☐building permits ☒Sanborn maps
☐FL State Archives/photo collection ☒city directory ☒occupant/owner interview ☐plat maps
☒property appraiser / tax records ☒newspaper files ☐neighbor interview ☐Public Lands Survey (DEP)
☒cultural resource survey (CRAS) ☒historic photos ☐interior inspection ☐HABS/HAER record search
☐other methods (describe) _____
Bibliographic References (give FMSF manuscript # if relevant, use continuation sheet if needed) _____

OPINION OF RESOURCE SIGNIFICANCE

Appears to meet the criteria for National Register listing individually? ☐yes ☒no ☐insufficient information
Appears to meet the criteria for National Register listing as part of a district? ☒yes ☐no ☐insufficient information
Explanation of Evaluation (required, whether significant or not; use separate sheet if needed) retains integrity and would contribute to a district

Area(s) of Historical Significance (see *National Register Bulletin 15*, p. 8 for categories: e.g. "architecture", "ethnic heritage", "community planning & development", etc.)
1. _____ 3. _____ 5. _____
2. _____ 4. _____ 6. _____

DOCUMENTATION

Accessible Documentation Not Filed with the Site File - including field notes, analysis notes, photos, plans and other important documents
1) Document type _____ Maintaining organization _____
Document description _____ File or accession #'s _____
2) Document type _____ Maintaining organization _____
Document description _____ File or accession #'s _____

RECORDER INFORMATION

Recorder Name Patricia Davenport Affiliation Environmental Services, Inc.
Recorder Contact Information 7220 Financial Way Ste. 100 Jacksonville, FL 32256 904-470-2200, pdavenport@esinc.cc
(address / phone / fax / e-mail)

Required Attachments

❶ USGS 7.5' MAP WITH STRUCTURE LOCATION PINPOINTED IN RED
❷ LARGE SCALE STREET, PLAT OR PARCEL MAP (available from most property appraiser web sites)
❸ PHOTO OF MAIN FACADE, ARCHIVAL B&W PRINT OR DIGITAL IMAGE FILE
If submitting an image file, it must be included on disk or CD AND in hard copy format (plain paper is acceptable).
Digital image must be at least 1600 x 1200 pixels, 24-bit color, jpeg or tiff.

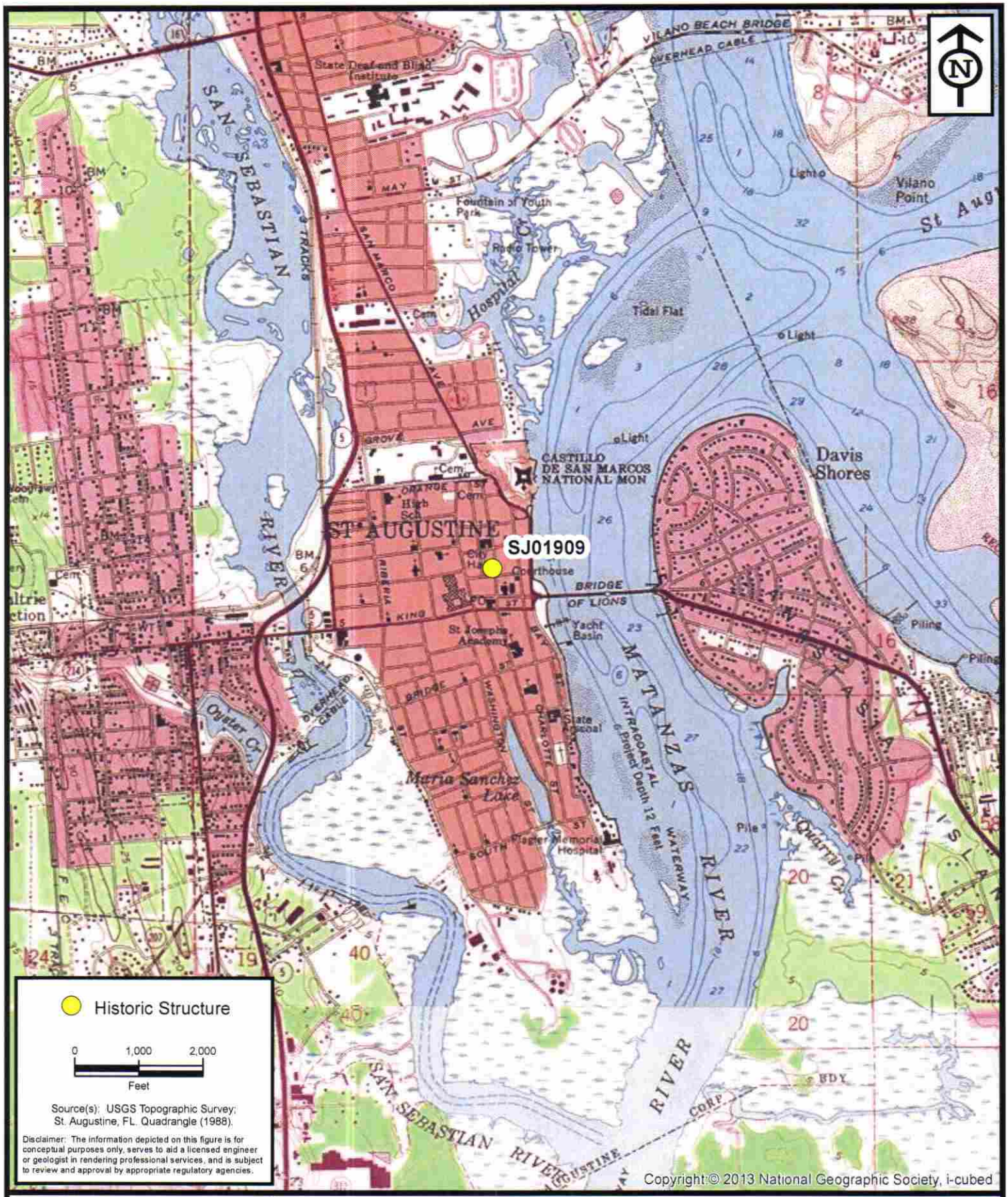

ENVIRONMENTAL SERVICES, INC.
7220 Financial Way, Suite 100
Jacksonville, Florida 32256
(904) 470-2200
(904) 470-2112 Fax
www.environmentalservicesinc.com

Project Location - SJ01909

City of St. Augustine Historic Structure Survey

St. Johns County, Florida

Project:	AJ15441.00
Date:	May 2016
Drawn By:	AVL
Checked By:	JRN
Approved By:	PD
Figure:	1

Path: P:\GIS_Projects\AJ\2015\441\00\fig\FMSF\SJ01909\Location.mxd Date: 1/29/2016 10:56:13 AM

SJ01909

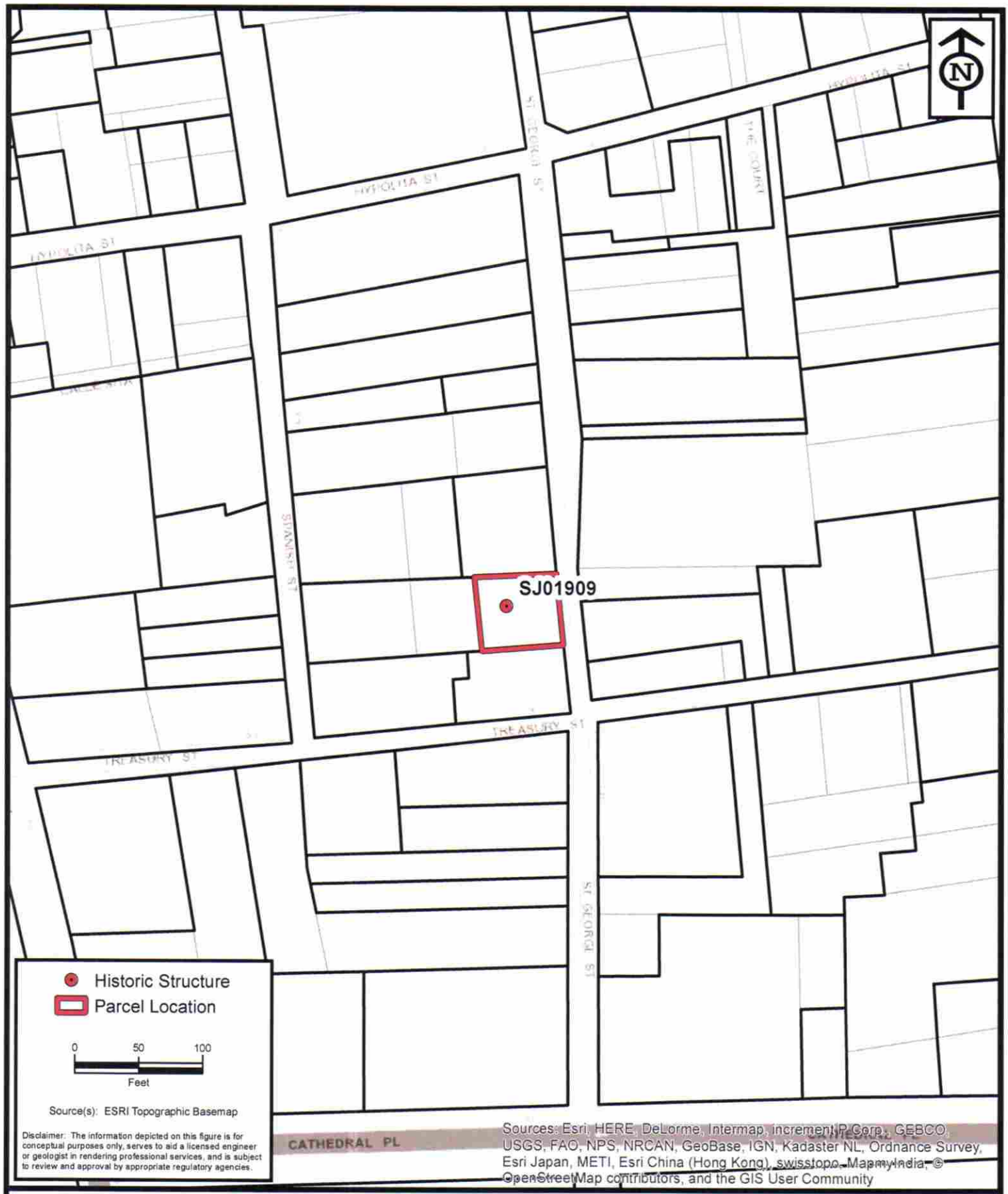

ENVIRONMENTAL SERVICES, INC.
7220 Financial Way, Suite 100
Jacksonville, Florida 32256
(904) 470-2200
(904) 470-2112 Fax
www.environmentalservicesinc.com

Parcel Location - SJ01909

City of St. Augustine
Historic Structure Survey

St. Johns County, Florida

Project:	AJ15441.00
Date:	May 2016
Drawn By:	AVL
Checked By:	JRN
Approved By:	PD
Figure:	2

Path: P:\GIS_Projects\AJ\2015\441\00\fig\FMSF\SJ01909\Parcel.mxd Date: 2/1/2016 11:44:43 AM

SJ01909

26
26

132
GALLERY
HELP WANTED

136
Pirate's Paradise
Resortwear & Souvenirs
Trolley Tickets Sold Here
132
Gallery
Antiques
Pizza Time
Help Wanted
SPY

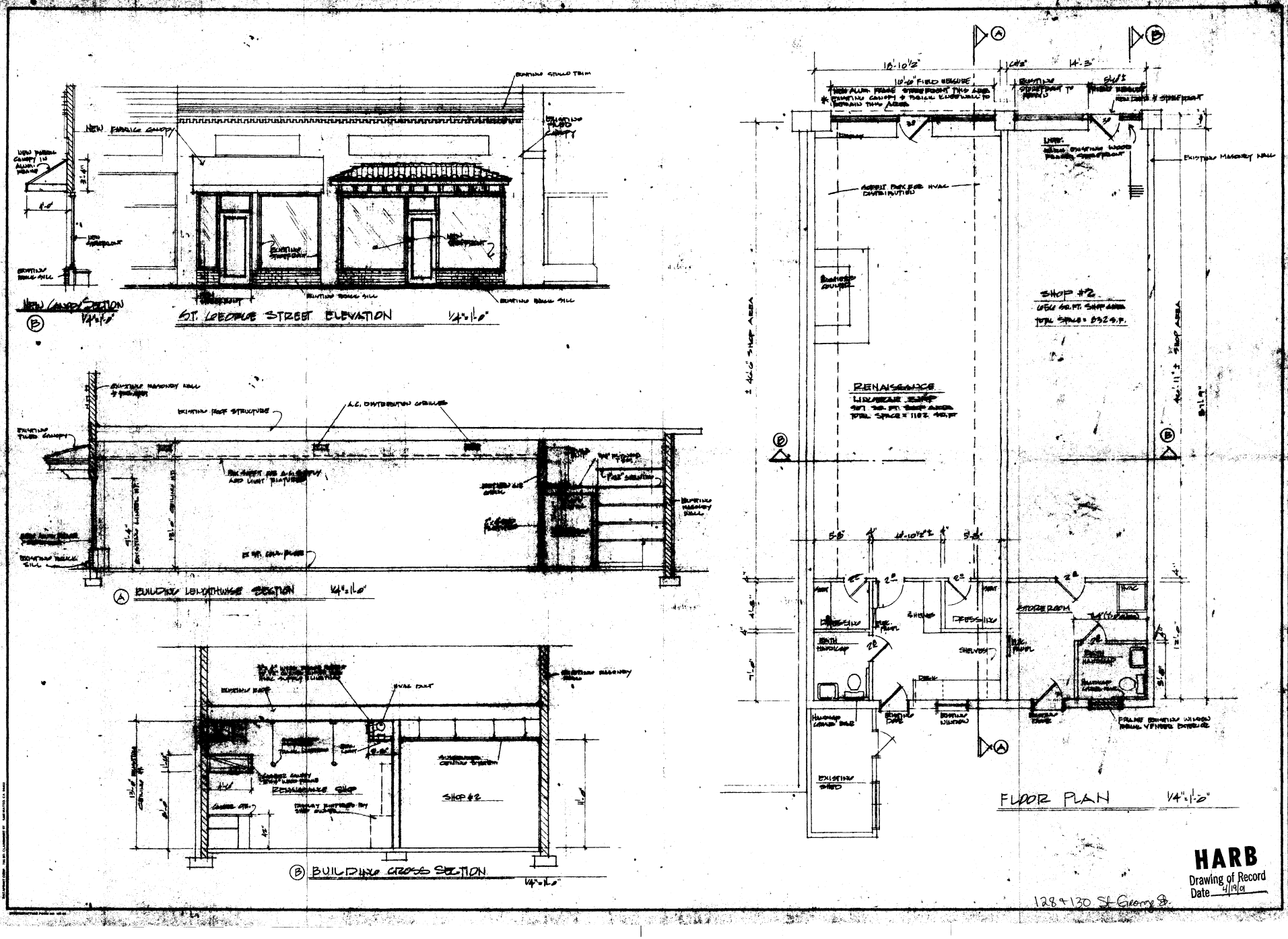
NEW CANOPY SECTION 1/4"=1'-0"
ST. GEORGE STREET ELEVATION 1/4"=1'-0"
BUILDING LENGTHWISE SECTION 1/4"=1'-0"
BUILDING CROSS SECTION 1/4"=1'-0"
FLOOR PLAN 1/4"=1'-0"
RENAISSANCE
SHOP #2
STORE ROOM
DRESSING
SHELVES
EXISTING SHED
EXISTING MASONRY WALL
HARB
Drawing of Record
Date 4/19/01
128 + 130 St George St.
SHOP REMODELING AT NOS. 128 + 130
ST. GEORGE STREET - CITY OF ST. AUGUSTINE
NOS. PHASE I - OF PHASE
DATE 3-19-01
DRAWN DG
SHEET 1

Received February 17, 2026
Planning and Building Dept.

HARB APPLICATION AGREEMENT

In filling out this application:

- I understand that it becomes part of the Public Record of the City of St. Augustine and hereby certify that all information contained herein is accurate to the best of my knowledge.
- I further understand that if this application is for an *Opinion of Appropriateness*, I must still obtain a *Certificate of Appropriateness* before applicable permits can be issued for project work to begin. If this application is for a *Certificate of Appropriateness, Demolition*, or *Partial Demolition*, and it is approved, I am required to obtain other development approvals, archaeological review, and a building permit as necessary prior to starting project work.
- Once a hearing date has been set and a legal notice has been published or posted, I, or an authorized representative, must be prepared to present the request at the scheduled hearing date. The cost of subsequent hearings requiring re-noticing due to continuance will be assessed to the applicant.
- I have been made aware that applications must be sufficiently complete at the time of submittal or may be delayed to a future meeting. Relevant information necessary for application review shall include but not be limited to the items referenced in the "Plan Requirements" section of the Architectural Guidelines for Historic Preservation (AGHP) depending on the scope and scale of the project. The minimum application requirements are marked as required submittal documents in this online application. Contact Planning Staff if the project is unique and needs to be addressed in a different manner. Minor details may be submitted in the portal up to 10 days before the meeting and HARB will determine if additional materials may be presented at the meeting.

All applicants/owners of record must sign the application agreement. If the property applicant/owner is a governmental agency; licensed business or company; incorporated organization; or an administered estate, an authorized agent may sign. If the applicant is different than the property owner, the application must be signed by both parties. An Authorization Form signed by the property owner(s) and notarized, must be submitted only in the absence of the property owner's signature or where an authorized agent signs in lieu of the property owner.

Project Address: 130 St.George St. St.Augustine, FL 32084

Applicant's Name: Duncan Dailey Applicant's Signature: _____

Owner's Name: Melissa Richardson Owner's Signature: Melissa Richardson

Owner's Name: _____ Owner's Signature: _____

Owner's Name: _____ Owner's Signature: _____

(Can add additional signature page if needed)

Florida Statute 286.0105 states that a person appealing any decision by this board at any meeting regarding this application may need a verbatim record of the proceedings which includes testimony and evidence upon which the appeal is to be based.

Received February 25, 2026
Planning and Building Dept.

CITY OF ST. AUGUSTINE EST. 1565

Owner's Authorization For Agent

Duncan Dailey with Burns Landscaping is/are hereby authorized TO ACT ON BEHALF OF Melissa Richardson the owner(s) of those lands described within ☐ the attached application, or ☑ described within the previously filed Application number: HP2026-0011, and as described in the attached deed or other such proof of ownership as may be required, in applying to the City of St. Augustine's Historical Board, for an application related to the structure located at: 130 St. George Street, St Augustine, FL 32084

BY: Melissa Richardson
Signature of Owner

Melissa Richardson
Print Name of Owner

904-501-4001
Telephone Number

State of Florida

County of St. Johns

Signed and sworn before me on this 24 day of February, 2026

By Melissa Richardson

Identification verified:

Oath sworn: ✓ Yes ____ No

JULIA NEWTON
Notary Public-State of Florida
Commission # HH 328082
My Commission Expires
November 01, 2026

Notary Signature: _____

My Commission expires: _____

Rev:120219 jw

Received February 17, 2026
Planning and Building Dept.

Received February 17, 2026
Planning and Zoning Board

Received February 17, 2026
Planning and Building Dept.

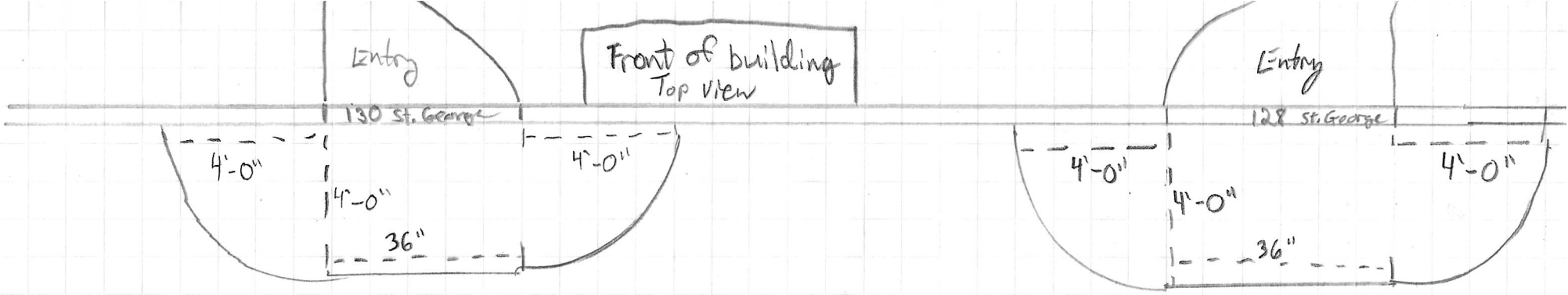

130 St. George St.
+128

Buma Landscaping
904-814-3195
info@bumalandscaping.com
205 W. Davis Industrial Dr. Ste 5
St. Augustine FL 32084
CGC-1534596

North →
St. George St.

Side View

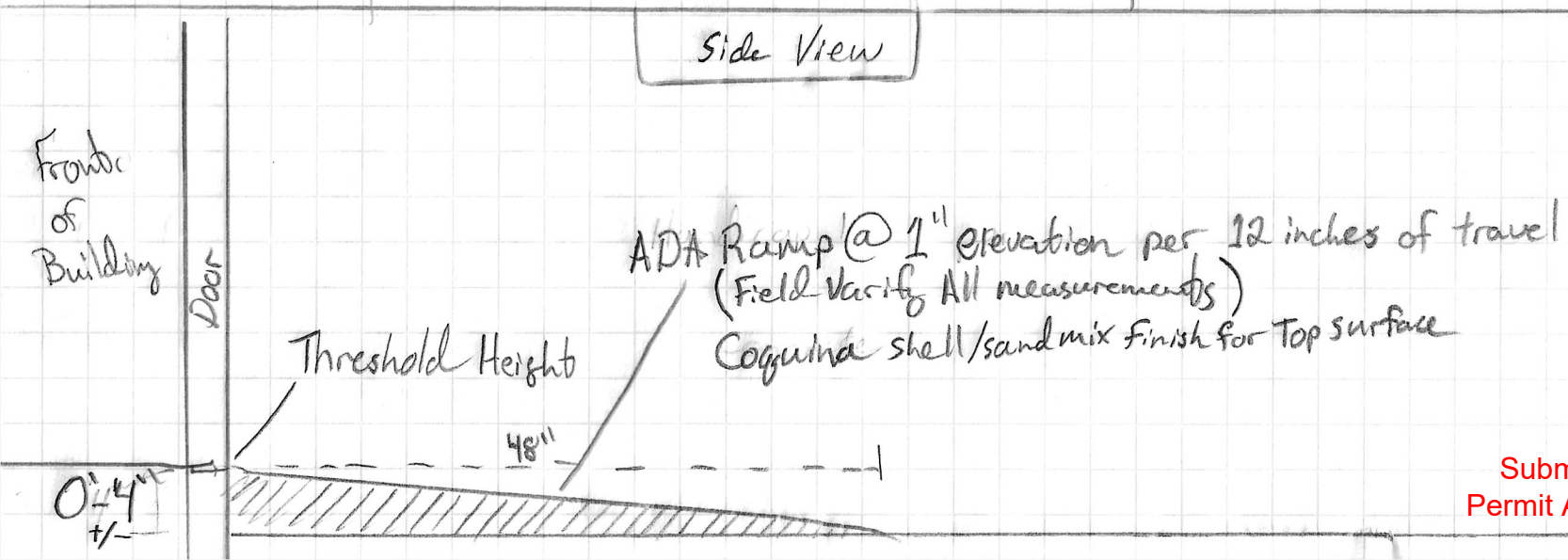

Proposed Ramp
Submitted on 1/26/26 for Building
Permit Added to application by Staff

Drawing of Existing Storefront
Submitted 2/4/2026 for Building Permit
Added to application by Staff

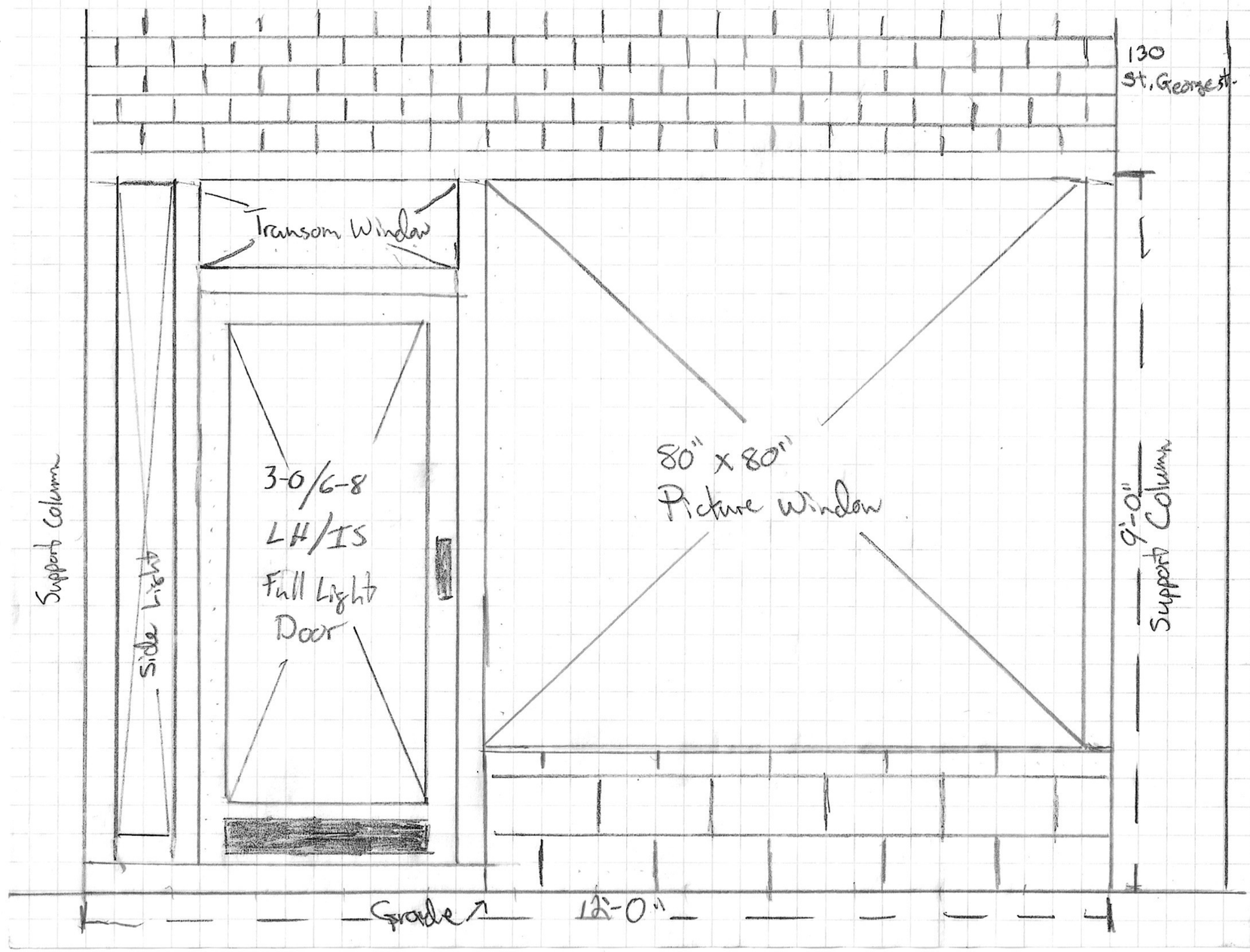

DESIGN CRITERIA

DESIGN CODE:
2023 FLORIDA BUILDING CODE, 8TH EDITION – BUILDING, EXISTING AND CURRENT REFERENCED CODES AND STANDARDS

CLASSIFICATION OF WORK:
REPAIR ---------- **EXTERIOR WALL REPAIR**

FLOOD ZONE CRITERIA: ---------- FEMA AE–7

RAIN LOAD DESIGN:
RAIN INTENSITY ---------- 4.5 IN/HR

ROOF LOADING (CONVENTIONAL): **(Cd=1.25)**
LIVE LOAD ---------- 20 PSF
DEAD LOAD (SHINGLE OR METAL) ---------- 17 PSF
DEAD LOAD (TILE) ---------- 25 PSF

ROOF LOADING (PRE–ENGINEERED TRUSS): **(Cd=1.25)**
TOP CHORD LIVE LOAD ---------- 20 PSF
TOP CHORD DEAD LOAD (SHINGLE OR METAL) ---------- 7 PSF
TOP CHORD DEAD LOAD (TILE) ---------- 20 PSF
BOTTOM CHORD LIVE LOAD ---------- 10 PSF
BOTTOM CHORD DEAD LOAD ---------- 5 PSF

PRE–ENGINEERED TRUSS LOADING NOTES
1. **UNINHABITABLE ATTICS WITH LIGHT STORAGE SHALL HAVE ROOF TRUSS BOTTOM CHORD LIVE LOAD INCREASED TO 20 PSF. CONTACT EOR IF ANY OTHER LOADING REQUIREMENTS ARE NEEDED.**
2. ROOF TRUSS MAY BE DESIGNED WITH ROOF BOTTOM CHORD LIVE LOAD (10 PSF) APPLIED NON–CONCURRENTLY WITH ROOF TOP CHORD LIVE LOAD (20 PSF)
3. FOR WIND UPLIFT, TRUSSES SHALL BE DESIGNED WITH A MIN. 5 PSF TOP AND BOTTOM CHORD DEAD LOAD.
4. REACTIONS SHALL BE REDUCED PER ASD LOAD COMBINATION D + 0.75 (L + LR)

ROOF FRAMING DEFLECTION: **(MAX: 0.75")**
LIVE LOAD ---------- L/240
TOTAL LOAD ---------- L/240

WIND LOADING NOTES:
1. FOR WIND UPLIFT, TRUSSES SHALL BE DESIGNED WITH A DEAD LOAD CONDITION OF 5 PSF TOP CHORD AND 5 PSF BOTTOM CHORD. WIND UPLIFT REACTIONS SHALL BE REDUCED PER ASD LOAD COMBINATION: 0.6D + 0.6W.

WIND LOADING: (ASCE 7–22)
ULTIMATE WIND SPEED ---------- 130
NOMINAL WIND SPEED ---------- 101
EXPOSURE CATEGORY ---------- D
BUILDING RISK CATEGORY ---------- II
BUILDING ENCLOSURE CLASSIFICATION ---------- **ENCLOSED**
INTERNAL PRESSURE COEFFICIENT ---------- **±0.18**
COMPONENTS AND CLADDING ---------- **SEE TABLES**

SCOPE OF SERVICE

MEANS AND METHODS:
THE STRUCTURAL ENGINEER OF RECORD AND FORTRESS ENGINEERING GROUP SHALL NOT HAVE CONTROL OR BE RESPONSIBLE FOR CONSTRUCTION MEANS, METHODS, TECHNIQUES, PROCEDURES, OR SEQUENCES; FOR THE ACTS OR OMISSIONS OF THE CONTRACTOR OR ANY OTHER PERSONS PERFORMING THE WORK OR FOR THE FAILURE FOR ANY OF THEM TO CONSTRUCT THE WORK IN ACCORDANCE WITH THE CONTRACT DOCUMENTS.

LIMITS OF STRUCTURAL ENGINEERING DESIGN RESPONSIBILITIES:
THE ITEMS SPECIFICALLY DESIGNED BY THE STRUCTURAL ENGINEER ARE LIMITED TO THE FOLLOWING: STRUCTURE TO SUPPORT GRAVITY LOADS, RESIST UPLIFT, AND RESIST LATERAL LOADS, AND MAINTAIN CONTINUITY FROM THE STRUCTURE TO SOILS BELOW. ITEMS NOT DESIGNED INCLUDE, BUT NOT LIMITED TO, PRE–ENGINEERED TRUSS DESIGN, TRUSS–TO–TRUSS CONNECTIONS, OR ANY ARCHITECTURAL, MECHANICAL OR ELECTRICAL SYSTEM.

THE CONTRACTOR SHALL PROVIDE ALL TEMPORARY BRACING/SHORING, TEMPORARY SUPPORTS AND OTHER SUCH ITEMS OR MEASURES NECESSARY TO PROTECT THE STRUCTURE AND ANY PERSONNEL DURING CONSTRUCTION. THE SAFETY OF THE STRUCTURE AND PERSONNEL DURING CONSTRUCTION ARE THE SOLE RESPONSIBILITY OF THE CONTRACTOR.

THE CONTRACTOR/BUILDER SHALL BE RESPONSIBLE FOR THE DESIGN/ INSTALLATION OF ALL WATERPROOFING.

RENOVATIONS, ADDITIONS AND EXISTING STRUCTURES:
INFORMATION SHOWN ON THESE DRAWINGS REGARDING EXISTING CONDITIONS HAVE BEEN OBTAINED BASED ON AVAILABLE SOURCES AT THE TIME OF DESIGN INCLUDING ASSUMPTIONS BASED ON EXPERIENCE WITH SIMILAR STRUCTURES. THE ACTUAL AS–BUILT CONDITION FOUND IN THE FIELD MAY VARY FROM INFORMATION INDICATED IN THESE DRAWINGS. CONTRACTOR SHALL VERIFY ALL EXISTING CONDITIONS AND NOTIFY ENGINEER IN WRITING BEFORE BEGINNING NEW CONSTRUCTION OF ANY INTERFERENCES AND/OR DISCREPANCIES THAT MIGHT EXIST BETWEEN THESE DRAWINGS AND/OR ACTUAL FIELD CONDITIONS. CONTRACTOR SHALL REPAIR/REPLACE ANY DAMAGED EXISTING STRUCTURAL MEMBERS DISCOVERED DURING CONSTRUCTION.

GENERAL FOUNDATION NOTES

FOOTING AND FOUNDATIONS:
FOOTINGS AND FOUNDATIONS SHALL BE IN ACCORDANCE WITH LOCAL BUILDING CODES. **FOOTINGS HAVE BEEN DESIGNED WITH A MINIMUM SOIL BEARING PRESSURE OF 2000 PSF. A SOILS INVESTIGATION REPORT BY OTHERS IS RECOMMENDED TO VERIFY SUITABLE SUBSURFACE CONDITIONS.** IF THE FOOTING ELEVATIONS SHOWN OCCUR IN A DISTURBED OR UNSTABLE SOIL, THE EOR SHALL BE NOTIFIED. SOIL SHALL BE FREE OF ORGANIC AND COHESIVE (CLAY) MATERIAL. EXISTING SOIL AND STRUCTURAL FILL SHALL BE COMPACTED TO A MIN. OF 95% MODIFIED PROCTOR IN ACCORDANCE WITH ASTM D 1557.

FOUNDATION PLAN ONLY CONVEYS STRUCTURAL INFORMATION. SEE ARCHITECTURAL PLANS FOR GENERAL FEATURES, CONDUITS, ELECTRICAL EMBEDS, STEP HEIGHTS AND OTHER NON–STRUCTURAL INFORMATION. DO NOT SCALE DRAWINGS. REFER TO ARCHITECTURAL PLANS FOR ALL DIMENSIONS.

MINIMUM CONCRETE COVER FOR REINFORCING SHALL BE 3" IN FOOTINGS. PROVIDE #3 @ 48" OC OR ROD CHAIRS PER FOUNDATION DETAILS. PROVIDE CONTINUITY OF REINFORCING AT INTERSECTIONS OF PERPENDICULAR CONCRETE ELEMENTS BY INSTALLING CORNER BARS, MINIMUM OF 40 BAR DIAMETERS INTO EACH ELEMENT. SPLICES IN REINFORCING SHALL BE 48 BAR DIAMETERS, WHERE PERMITTED.

STEM WALLS CONSTRUCTED W/ MASONRY UNITS SHALL BE COURSED W/ RUNNING BONDS. STACKED BONDS ARE NOT PERMITTED. ALL EXTERIOR WALLS SHALL BE REINFORCED FULL HEIGHT AS SPECIFIED ON PLAN AND AT CORNERS, WALL ENDS, AND WALL INTERSECTIONS. PROVIDE CONTINUITY OF REINFORCING AT INTERSECTIONS OF PERPENDICULAR MASONRY ELEMENTS BY INSTALLING CORNER BARS, MINIMUM OF 40 BAR DIAMETERS INTO EACH ELEMENT. AT STEM WALLS CONSTRUCTED OF 5 OR MORE COURSES, PROVIDE HORIZONTAL JOINT REINFORCEMENT AT 16" O.C. VERTICALLY, EVERY OTHER COURSE. VERTICAL REINFORCING SHALL BE INCREASED AS NOTED ON PLAN. LAP JOINT REINFORCING SHALL BE A MINIMUM OF 6".

SLABS ON GRADE:
CONCRETE SLABS ON GRADE SHALL BE INSTALLED OVER MINIMUM 6 MIL POLYETHYLENE VAPOR RETARDER WITH JOINTS LAPPED 6" AND SEALED OVER CLEAN, COMPACTED EARTH OR FILL WITH APPROVED CHEMICAL SOIL TREATMENT FOR PREVENTION OF SUBTERRANEAN TERMITES. SAWCUT CONTROL JOINTS SHALL BE INSTALLED THROUGHOUT ENTIRE SLAB ON GRADE. SAWCUTS ¼" THE DEPTH OF THE SLAB SHALL PLACED IN A 12'x12' GRID WITHIN 4 TO 12 HOURS OF CONCRETE PLACEMENT

GENERAL FRAMING NOTES

PRE–ENGINEERED WOOD TRUSSES:
SHALL BEAR THE SEAL OF AN ENGINEER IN THE STATE WHERE PROJECT IS BEING BUILT AND SHALL COMPLY WITH NFPA, TPI, AND AITC 100. CONTRACTOR SHALL VERIFY THAT ADEQUATE TRUSS BEARING IS INSTALLED AT ALL TRUSSES AS INDICATED IN THE TRUSS SHOP DRAWINGS. ALL TRUSS–TO–TRUSS CONNECTIONS AND TRUSS PROFILES ARE THE RESPONSIBILITY OF THE DELEGATED TRUSS ENGINEER. ALL TRUSSES SHALL HAVE TEMPORARY BRACING PER 'COMMENTARY' AND RECOMMENDATION FOR HANDLING, INSTALLING & BRACING METAL PLATE CONNECTED WOOD TRUSSES, HIB–91." AT MULTIPLE STRAP CONNECTIONS, SPREAD STRAPS TO AVOID NAILING CONFLICTS THROUGH TRUSS. WHEN USING (2) STRAPS ON SINGLE PLY TRUSSES, PLACE STRAPS DIAGONALLY ACROSS DBL. TOP PLATE FROM EA. OTHER.

WOOD FRAMING SPECIFICATIONS:
ALL WOOD FRAMING HAS BEEN DESIGNED IN ACCORDANCE WITH NATIONAL DESIGN SPECIFICATIONS (NDS) FOR WOOD CONSTRUCTION, LATEST EDITION. ALL WOOD MEMBERS EXPOSED TO WEATHER OR IN CONTACT WITH MASONRY, CONCRETE OR SOIL SHALL BE PRESSURE–TREATED. IF, ACQ OR NON–DOT BORATE PRESERVATIVE TREATMENT IS USED, ALL ATTACHED FASTENERS SHALL BE HOT DIPPED GALVANIZED. IF ACZA PRESERVATIVE IS USED, ALL ATTACHED FASTENERS SHALL BE STAINLESS STEEL.

ROOF COVERING SPECIFICATIONS:
THE CONTRACTOR SHALL BE RESPONSIBLE FOR THE DESIGN AND INSTALLATION OF THE ROOF COVERING SYSTEM. ASPHALT SHINGLES SHALL COMPLY WITH ASTM D3161 AND BE INSTALLED ACCORDING TO THE MANUFACTURER'S REQUIREMENTS. TILE ROOFS SHALL BE INSTALLED PER THE "CONCRETE AND CLAY ROOF TILE INSTALLATION MANUAL." AND THE MANUFACTURER'S REQUIREMENTS. STANDING SEAM METAL ROOFS SHALL COMPLY WITH ASTM E1514 AND BE INSTALLED ACCORDING TO THE MANUFACTURER'S REQUIREMENTS. THE CONTRACTOR SHALL BE RESPONSIBLE FOR THE DESIGN AND INSTALLATION OF ALL METAL FLASHING AND VALLEY MATERIALS.

GUARDRAILS AND HANDRAILS:
THE CONTRACTOR/BUILDER SHALL BE RESPONSIBLE FOR THE CONSTRUCTION OF ANY GUARDRAILS OR HANDRAILS NOT SPECIFICALLY DETAILED IN THESE PLANS. ALL GUARDRAILS AND HANDRAILS SHALL BE DESIGNED AND INSTALLED TO MEET THE REQUIREMENTS AND CONFORM TO THE SPECIFICATIONS OF THE **2023 FBC**.

PRE–ENGINEERED MISCELLANEOUS STRUCTURES:
ANY EYEBROW, CANOPY, ALUMINUM COMPONENT OR ANY OTHER BUILDING APPENDAGES NOT SPECIFICALLY DETAILED HEREIN SHALL BE DESIGNED BY OTHERS AT THE EXPENSE OF THE CONTRACTOR. CONTRACTOR SHALL SUBMIT SHOP DRAWINGS OF MISCELLANEOUS ATTACHED STRUCTURES TO THE MAIN STRUCTURE INDICATING CONNECTION POINTS, REACTIONS AND FASTENER REQUIREMENTS PRIOR TO FABRICATION OF MISCELLANEOUS STRUCTURE AND PRIOR TO CONSTRUCTION OF MAIN STRUCTURE. CONTRACTOR SHALL COORDINATE LOADING REQUIREMENTS WITH ANY OTHER PRE–ENGINEERED COMPONENT SUCH AS ROOF FLOOR AND ROOF TRUSS ENGINEERING.

MATERIAL SPECIFICATIONS

ANCHOR BOLTS & THREADED ROD: SHALL BE IN ACCORDANCE WITH ASTM A307 OR ASTM F1554 GRADE 36.

WASHERS: SHALL BE IN ACCORDANCE WITH ASTM A500 (GRADE B).

NUTS: SHALL BE IN ACCORDANCE WITH ASTM A563 GRADE A HEX.

METAL CONNECTORS: ALL METAL CONNECTORS WHICH ARE EXPOSED TO EXTERIOR SHALL BE GALVANIZED OR BETTER.

RETROFIT REBAR/ROD INSTALLATION: EMBEDMENT OF RODS OR REBAR DOWELS SHALL BE 12 BAR DIAMETER MINIMUM, HOLES SHALL BE ¼" LARGER THAN REBAR SIZE AND ⅛" LARGER THAN THREADED ROD SIZE. (UON)

EPOXY: SIMPSON SET–XP (MINIMUM EDGE DISTANCE PER MANUFACTURES SPECIFICATION).

REINFORCING STEEL: SHALL BE ASTM A615, GRADE 60.

STRUCTURAL STEEL: SHALL BE ASTM A992, GRADE 50.

WELDED WIRE FABRIC (WWF): SHALL BE ASTM A1064.

LAMINATED VENEER LUMBER (LVL): ALL LAMINATED VENEER LUMBER SHALL MEET OR EXCEED THE FOLLOWING DESIGN PROPERTIES – ELASTIC MODULUS (E) 2,000 KSI, BENDING STRESS (Fb) 2600 PSI, PLY WIDTH OF 1¾"

CONCRETE SPECIFICATIONS:
ALL CONCRETE HAS BEEN DESIGNED IN ACCORDANCE WITH ACI 318, AND SHALL BE CONSTRUCTED IN ACCORDANCE WITH ACI 301, 318 AND ALL OTHER APPLICABLE REFERENCED STANDARDS. ALL CONCRETE SHALL HAVE A MINIMUM COMPRESSIVE STRENGTH OF 2500 PSI AT 28 DAYS.

CONCRETE MASONRY SPECIFICATIONS:
MASONRY SHALL BE DESIGNED, CONSTRUCTED AND TESTED IN ACCORDANCE WITH ACI 530, ACI530.1 AND ASTM C90. MASONRY UNITS SHALL BE HOLLOW LOAD–BEARING, GRADE N, TYPE 1, NORMAL WEIGHT, WITH A MINIMUM COMPRESSIVE STRENGTH OF 1900 PSI (F'M=1500 PSI).

GROUT AND MORTAR SHALL BE DESIGNED, CONSTRUCTED AND TESTED IN ACCORDANCE ASTM C476, ASTM C1019, ASTM C270. GROUT SHALL HAVE A MINIMUM 28 DAY COMPRESSIVE STRENGTH OF 3000 PSI AND A MAXIMUM COURSE AGGREGATE SIZE OF ⅜" PLACED AT AN 8"–11" SLUMP. MORTAR SHALL BE TYPE M OR S.

CELLS CONTAINING VERTICAL REINFORCEMENT SHALL BE GROUTED IN 5'–0" MAXIMUM LIFTS. WHEN LIFT SHALL EXCEED 5'–0", PROVIDE CLEAN OUTS IN BOTTOM COURSE OF MASONRY WALL.

CLAY MASONRY (BRICK):
BRICK SHALL BE IN ACCORDANCE WITH ASTM C62, C216, OR C652 FOR BUILDING BRICK, FACING BRICK, & HOLLOW BRICK, RESPECTFULLY. TYPE N MORTAR MAY BE USED IN BRICK VENEER.

SHEATHING SPECIFICATIONS

TYPICAL SHEATHING NOTES:
1. SHEATHING GAPS SHALL BE MIN. ⅛" AND MAX. 5⁄16", SEE **DETAIL 3/SD1**.
2. SEE **TABLE 5/C1** FOR "NAIL SIZE LEGEND" FOR TYPICAL NAIL SPECIFICATIONS.

TABLE 1: WALL SHEATHING

SPECIFICATION	TYPICAL NAILING	SHEARWALL NAILING
MIN. 7⁄16", 24/16, APA RATED OSB **OR** PLYWOOD SHEATHING	8d COMMON @ 6" OC EDGE, 12" OC FIELD	8d COMMON @ 3" OC EDGE, 6" OC FIELD

WALL SHEATHING NOTES:
1. FLEXIBLE FINISH INCLUDES WOOD, CEMENT OR VINYL SIDING, HARDI PANEL AND BRICK. ALL OTHER SIDING SHALL BE CONSIDERED BRITTLE FINISH.
2. SHEATHING MAY BE INSTALLED HORIZONTALLY OR VERTICALLY.
3. PANEL EDGE BLOCKING IS REQUIRED AT SHEAR WALLS AND WALLS WITH BRITTLE FINISH. BLOCKING SHALL BE FLATWISE MIN 2x4 SPF#2 FASTENED EA END W/ (3)10d TOE–NAILS.

TABLE 2: ROOF SHEATHING

SPECIFICATION	TYPICAL NAILING	GABLE END NAILING
SHINGLE: MIN. 19⁄32", 40/20, APA RATED OSB **OR** PLYWOOD SHEATHING	10d RING SHANK @ 6" OC EDGE, 6" OC FIELD	10d RING SHANK @ 4" OC EDGE, 4" OC FIELD W/IN 4' OF ROOF END
TILE: MIN. 19⁄32", 40/20, APA RATED OSB **OR** PLYWOOD SHEATHING	10d RING SHANK @ 6" OC EDGE, 6" OC FIELD	10d RING SHANK @ 4" OC EDGE, 4" OC FIELD W/IN 4' OF ROOF END
METAL: MIN. 19⁄32", 40/20, APA RATED OSB **OR** PLYWOOD SHEATHING	10d RING SHANK @ 6" OC EDGE, 6" OC FIELD	10d RING SHANK @ 4" OC EDGE, 4" OC FIELD W/IN 4' OF ROOF END

ROOF SHEATHING NOTES:
1. SHEATHING TO BE INSTALLED WITH LONG DIMENSION PERPENDICULAR TO SUPPORTS.
2. PANEL EDGE BLOCKING PER MANUFACTURER RECOMMENDATIONS.

TABLE 3: PORCH CEILING SHEATHING

SPECIFICATION	TYPICAL NAILING	SHEARWALL NAILING
MIN. 19⁄32", 40/20, APA RATED OSB **OR** PLYWOOD SHEATHING	10d COMMON @ 6" OC EDGE, 12" OC FIELD	10d COMMON @ 3" OC EDGE, 6" OC FIELD

PORCH CEILING SHEATHING NOTES:
1. PANEL EDGE BLOCKING IS NOT REQUIRED.

TYPICAL MEMBER FASTENING

TABLE 4: WOOD MEMBER FASTENING SCHEDULE

MEMBER CONNECTION	TYPE	FASTENERS
TOP PLATE TO TOP PLATE	FACE NAIL	(3)ROWS 10d @ 12" OC STAGGERED
TOP PLATE LAP	FACE NAIL	(16)10d EVENLY SPACED
TOP PLATE TO STUD (BOTTOM PLY OF DOUBLE TOP PLATE END NAILED)	END NAIL	(2)10d @ 2x4 WALL
		(3)10d @ 2x6 WALL
		(4)10d @ 2x8 WALL
STUD TO BOTTOM PLATE	TOE NAIL	(3)10d @ 2x4 WALL
		(4)10d @ 2x6 WALL
		(5)10d @ 2x8 WALL
RIM BOARD TO TOP PLATE	TOE NAIL	10d @ 6" OC
CEILING JOIST TO TOP PLATE	TOE NAIL	(5)10d
CEILING JOIST TO RAFTER	FACE NAIL	(8)10d
TRUSS/RAFTER TO TOP PLATE	TOE NAIL	(2)12d COMMON
JACK RAFTER TO HIP	TOE NAIL	(3)10d
RAFTER TO RIDGE	TOE NAIL	(3)10d
BOTTOM PLATE TO RIBBON	FACE NAIL	16d COMMON @ 8" OC
BLOCKING	TOE NAIL	(3)10d @ 2x4
		(4)10d @ 2x6
		(5)10d @ 2x8

WOOD MEMBER FASTENING NOTES:
1. FASTENERS NOTED ON PLAN SHALL SUPERCEDE THE TABLE ABOVE.
2. SEE **DETAIL 4/SD1** FOR TYPICAL BUILT UP MEMBER FASTENING REQUIREMENTS.
3. SEE **TABLE 5/C1** FOR TYPICAL NAIL SPECIFICATIONS.

TABLE 5: NAIL SIZE LEGEND

PLAN REFERENCED NAIL	LENGTH	DIAMETER
8d COMMON	2½"	0.131"
8d RING SHANK	2⅜"	0.113"
10x1½"	1½"	0.148"
10d	3"	0.131"
10d COMMON	3"	0.148"
10d RING SHANK	3"	0.148"
12d COMMON	3¼"	0.148"
16d COMMON	3½"	0.162"

NAIL SIZE LEGEND NOTES:
1. USE THIS LEGEND FOR ALL NAILS NOT SPECIFICALLY NOTED WITH THE DIAMETER AND LENGTH WITHIN PLANS AND DETAILS.
2. USE BORED HOLES WHERE NEEDED TO PREVENT SPLITTING OF WOOD. BORED HOLES SHALL NOT BE GREATER THAN 75% OF THE NAIL DIAMETER.
3. NOMINAL NAIL LENGTHS AND DIAMETERS FROM **TABLE 5** SHALL BE MET PRIOR TO THE APPLICATION OF ANY PROTECTIVE COATING.

C&C WIND PRESSURES

ASCE 7–22 COMPONENT AND CLADDING DESIGN
GABLE ROOF PRESSURES

EFFECTIVE WIND AREA	POSITIVE (PSF)	ZONE 1 (PSF)	ZONE 2 (PSF)	ZONE 3 (PSF)	OVERHANG (PSF)
0 – 10 (SF)	+27.73	–55.95	–96.95	–96.95	–127.16
11 – 50 (SF)	+25.40	–48.14	–70.39	–83.17	–112.05
51 – 100 (SF)	+22.25	–40.84	–55.61	–67.73	–94.79
100+ (SF)	+19.76	–37.69	–44.33	–59.60	–85.33

ASCE 7–22 COMPONENT AND CLADDING DESIGN
HIP ROOF PRESSURES

EFFECTIVE WIND AREA	POSITIVE (PSF)	ZONE 1 (PSF)	ZONE 2 (PSF)	ZONE 3 (PSF)	OVERHANG (PSF)
0 – 10 (SF)	+22.58	–50.80	–66.24	–71.38	–101.60
11 – 50 (SF)	+19.43	–44.82	–59.60	–64.25	–93.13
51 – 100 (SF)	+15.44	–37.02	–50.97	–54.62	–81.84
100+ (SF)	+12.29	–31.05	–44.49	–47.48	–73.38

ASCE 7–22 COMPONENT AND CLADDING DESIGN
DOORS, WINDOWS, WALLS, AND SOFFIT WALL PRESSURES

LOCATIONS	EFFECTIVE WIND AREA	INTERIOR ZONE 4 (PSF)		END ZONE 5 (PSF)	
DOORS WINDOWS WALLS	0 – 10 (SF)	+30.22	–32.87	+30.22	–40.51
	11 – 50 (SF)	+27.06	–29.72	+27.06	–34.20
	51 – 100 (SF)	+25.73	–28.39	+25.73	–31.54
GARAGE DOOR	16 x 7 (FT)	NA		+25.73	–28.56
SOFFIT	NA	+30.22	–32.87	+30.22	–40.51

ENDZONE | a = 4'–0"

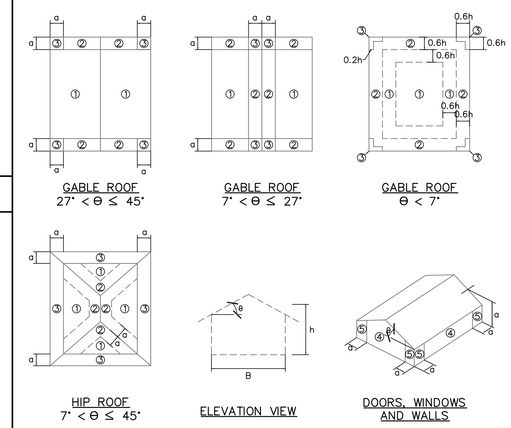

GABLE ROOF 27° < θ ≤ 45°
GABLE ROOF 7° < θ ≤ 27°
GABLE ROOF θ < 7°
HIP ROOF 7° < θ ≤ 45°
ELEVATION VIEW
DOORS, WINDOWS AND WALLS

NOTES:
1. ROOF OVERHANG LOADS SHALL BE DETERMINED BY SUMMING THE APPLICABLE ROOF ZONE PRESSURE WITH THE ADJACENT WALL ZONE PRESSURE.
2. **THE PRESSURES SHOWN ABOVE HAVE BEEN REDUCED PER ASD LOAD COMBINATION 0.6W.**
3. (+) = PRESSURE AND (–) = SUCTION. COMPONENT AND CLADDING ELEMENTS SHALL BE DESIGNED FOR BOTH POSITIVE AND NEGATIVE PRESSURES SHOWN IN TABLE ABOVE.
4. DESIGN OF WINDOW AND DOOR FASTENING TO WALL FRAMING IS THE RESPONSIBILITY OF THE WINDOW/DOOR MANUFACTURER AND SHALL MEET BOTH POSITIVE AND NEGATIVE PRESSURES SHOWN ABOVE.

SHEET INDEX

SHEET:	DESCRIPTION:
C1	DESIGN SPECIFICATIONS & NOTES
C2	DESIGN SPECIFICATIONS & NOTES
S1	FOUNDATION & WALL FRAMING PLAN
SD1	FRAMING DETAILS

VERY IMPORTANT FIELD ALTERATION AND PLAN SCALING NOTE:
PRIOR TO MAKING ANY STRUCTURAL FIELD MODIFICATIONS WHICH MAY VARY FROM THE INTENT OF THE ORIGINAL CONSTRUCTION DOCUMENTS, CONTRACTOR SHALL CONTACT FORTRESS ENGINEERING GROUP AT 904–821–7300. DO NOT SCALE DIMENSIONS FROM THESE DRAWINGS. ALL DIMENSIONS SHALL BE APPROVED BY FEG ARE SUBJECT TO ADDITIONAL DESIGN & INSPECTIONS AND FEES.***

Fortress ENGINEERING GROUP
6622 SOUTHPOINT DR S SUITE 240
JACKSONVILLE, FL 32216
904-821-7300 FL CA# 34117

REVISION		
	DATE	TYPE
#1	-	-
#2	-	-
#3	-	-

EXTERIOR WALL REPAIR PLAN
130 ST. GEORGE ST
ST. AUGUSTINE, FL 32084

DRAWN BY	SAL
CHECKED BY	SLM

STEPHEN MCCORVEY
FL PE# 88723

STEPHEN LEIGH MCCORVEY
LICENSE
No. 88723
STATE OF FLORIDA
PROFESSIONAL ENGINEER

This item has been digitally signed and sealed by Stephen L. McCorvey on the date adjacent to the seal.

Printed copies of this document are not considered signed and sealed and the signature must be verified on any electronic copies.

PRINT DATE
10/27/2025

FEG JOB#
FEG25 - 295

SHEET
C1
DESIGN SPECIFICATIONS & NOTES

TYPICAL METAL HANGERS

TABLE 1: SIMPSON SOLID SAWN HANGER SCHEDULE

STANDARD HANGERS		
CONNECTOR	CARRIED MEMBER	CARRYING MEMBER
LUS24	(2)0.148"x3"	(4)0.148"x3"
LUS26	(4)0.148"x3"	(4)0.148"x3"
HUS26	(6)0.162"x3½"	(14)0.162"x3½"
LUS28	(4)0.148"x3"	(6)0.148"x3"
HUS28	(8)0.162"x3½"	(22)0.162"x3½"
LUS210	(4)0.148"x3"	(8)0.148"x3"
HUS210	(10)0.162"x3½"	(30)0.162"x3½"
LUS24-2	(2)0.162"x3½"	(4)0.162"x3½"
HU24-2*	(2)0.148"x3"	(4)0.162"x3½"
HUS26-2	(4)0.162"x3½"	(4)0.162"x3½"
HUS28-2	(6)0.162"x3½"	(6)0.162"x3½"
HUS210-2	(8)0.162"x3½"	(8)0.162"x3½"
HUS212-2	(10)0.162"x3½"	(10)0.162"x3½"
HU26-3*	(6)0.148"x3"	(12)0.162"x3½"
HU28-3*	(6)0.148"x3"	(12)0.162"x3½"
HU210-3*	(10)0.148"x3"	(18)0.162"x3½"
HU212-3*	(10)0.148"x3"	(22)0.162"x3½"
HU28-4*	(6)0.162"x3½"	(14)0.162"x3½"
HU210-4*	(8)0.162"x3½"	(18)0.162"x3½"
SLOPED AND SKEWED HANGERS		
CONNECTOR	CARRIED MEMBER	CARRYING MEMBER
HU26	(2)0.148"x1½"	(4)0.162"x3½"
LSSJ26Z	(4)0.148"x3"	(4)0.148"x3"
HU28	(4)0.148"x1½"	(6)0.162"x3½"
LSSJ28Z	(5)0.148"x3"	(5)0.148"x3"
HU210	(4)0.148"x1½"	(8)0.162"x3½"
LSSJ210Z	(6)0.148"x3"	(6)0.148"x3"
HU212	(6)0.148"x1½"	(10)0.162"x3½"
HU24-2*	(2)0.148"x3"	(4)0.162"x3½"
HU26-2*	(6)0.148"x3"	(12)0.162"x3½"
HU28-2*	(6)0.148"x3"	(14)0.162"x3½"
HU210-2*	(10)0.148"x3"	(18)0.162"x3½"
HU212-2*	(10)0.148"x3"	(22)0.162"x3½"

TYPICAL HANGER NOTES:
1. HANGERS SHOWN ARE SIMPSON STRONG-TIE. ALTERNATIVE MANUFACTURER IS ACCEPTABLE AS LONG AS PUBLISHED VALUES ARE GREATER.
2. FOR HANGERS NOT SHOWN ABOVE, CONSULT THE SIMPSON STRONG-TIE CATALOG AND INSTALL FASTENERS THAT WILL PROVIDE THE GREATEST CAPACITY.
3. * INCLUDES CONCEALED FLANGE VERSION OF NOTED HANGER.
4. HANGERS ARE LISTED IN ORDER FROM LEAST TO GREATEST CAPACITY. ANY HANGER NOTED ON PLAN MAY BE SUBSTITUTED FOR A HANGER OF THE SAME HEIGHT AND WIDTH FURTHER DOWN THE LIST.
5. IF HANGER NOTED ON PLAN IS NOT INCLUDED IN THE CHARTS ABOVE, CONTACT EOR IF ALTERNATIVE HANGER IS REQUIRED.

TABLE 2: SIMPSON ENGINEERED WOOD HANGER SCHEDULE

STANDARD HANGERS		
CONNECTOR	CARRIED MEMBER	CARRYING MEMBER
IUS1.81/9.5	N/A	(8)0.148"x3"
IUS1.81/11.88	N/A	(10)0.148"x3"
IUS1.81/14	N/A	(14)0.148"x3"
IUS1.81/16	N/A	(16)0.148"x3"
IUS2.06/9.5	N/A	(8)0.148"x3"
IUS2.06/11.88	N/A	(10)0.148"x3"
IUS2.06/14	N/A	(12)0.148"x3"
IUS2.06/16	N/A	(14)0.148"x3"
IUS2.37/9.5	N/A	(8)0.148"x3"
IUS2.37/11.88	N/A	(10)0.148"x3"
IUS2.37/14	N/A	(14)0.148"x3"
IUS2.37/16	N/A	(16)0.148"x3"
HHUS46	(6)0.162"x3½"	(14)0.162"x3½"
HUS48	(6)0.162"x3½"	(6)0.162"x3½"
HUS410	(8)0.162"x3½"	(8)0.162"x3½"
HU410*	(10)0.148"x3"	(18)0.162"x3½"
HUS412	(10)0.162"x3½"	(10)0.162"x3½"
HU412*	(10)0.148"x3"	(22)0.162"x3½"
HU414*	(12)0.148"x3"	(24)0.162"x3½"
HU416*	(12)0.148"x3"	(26)0.162"x3½"
HU68*	(6)0.148"x3"	(14)0.162"x3½"
HU610*	(8)0.162"x3½"	(18)0.162"x3½"
HU612*	(8)0.162"x3½"	(22)0.162"x3½"
HU614*	(12)0.162"x3½"	(24)0.162"x3½"
HU616*	(12)0.162"x3½"	(26)0.162"x3½"
HU410-2*	(8)0.148"x3"	(18)0.162"x3½"
HU412-2*	(8)0.148"x3"	(22)0.162"x3½"
HU414-2*	(12)0.148"x3"	(26)0.162"x3½"

TYPICAL HANGER NOTES:
1. HANGERS SHOWN ARE SIMPSON STRONG-TIE. ALTERNATIVE MANUFACTURER IS ACCEPTABLE AS LONG AS PUBLISHED VALUES ARE GREATER.
2. FOR HANGERS NOT SHOWN ABOVE, CONSULT THE SIMPSON STRONG-TIE CATALOG AND INSTALL FASTENERS THAT WILL PROVIDE THE GREATEST CAPACITY.
3. * INCLUDES CONCEALED FLANGE VERSION OF NOTED HANGER.
4. HANGERS ARE LISTED IN ORDER FROM LEAST TO GREATEST CAPACITY. ANY HANGER NOTED ON PLAN MAY BE SUBSTITUTED FOR A HANGER OF THE SAME HEIGHT AND WIDTH FURTHER DOWN THE LIST.
5. IF HANGER NOTED ON PLAN IS NOT INCLUDED IN THE CHARTS ABOVE, CONTACT EOR IF ALTERNATIVE HANGER IS REQUIRED.

FLORIDA PRODUCT APPROAL:
FL# FOR TYPICAL SIMPSON PRODUCTS SPECIFIED ON PLAN ARE LISTED BELOW.
FL 10441, FL 10446, FL10456, FL 10531, FL 10860, FL 11473, FL 11496, FL 13872.

TYPICAL METAL CONNECTORS

TABLE 3: SIMPSON FASTENING SCHEDULE

FRAMING ANGLES		
CONNECTOR	CARRIED MEMBER	CARRYING MEMBER
LS30	(3)0.148"x1½"	(3)0.148"x1½"
A34	(4)0.131"x1½"	(4)0.131"x1½"
LS50	(4)0.148"x1½"	(4)0.148"x1½"
LS70	(5)0.148"x1½"	(5)0.148"x1½"
A35	(6)0.131"x1½"	(6)0.131"x1½"
LS90	(6)0.148"x1½"	(6)0.148"x1½"
HGA10KT	(4)¼"x1½" SDS	(4)¼"x1½" SDS
HGAM10KT	(4)¼"x1½" SDS	(4)¼"x2¾" TITEN TURBO
HURRICANE CLIPS AND TIES		
CONNECTOR	RAFTER/STUD	TOP/BOTTOM PLATE
H3	(4)0.131"x2½"	(4)0.131"x2½"
H2.5A	(5)0.131"x1½"	(5)0.131"x1½"
DSP	(8)0.148"x3"	(6)0.148"x3"
FLAT AND TWIST STRAPS		
CONNECTOR	UPPER MEMBER	LOWER MEMBER/FOUNDATION
MTS12	(5)0.148"x2½"	(5)0.148"x2½"
LSTA18	(7)0.148"x2½"	(7)0.148"x2½"
HTSM16	(8)0.148"x1½"	(4)¼"x2¼" TITEN TURBO
HTS16	(8)0.148"x1½"	(8)0.148"x1½"
HTSM20	(8)0.148"x1½"	(4)¼"x2¼" TITEN TURBO
HTS20	(8)0.148"x1½"	(8)0.148"x1½"
MSTAM24	(9)0.148"x2½"	(5)¼"x2¼" TITEN TURBO
MSTA24	(9)0.148"x2½"	(9)0.148"x2½"
MSTAM36	(13)0.148"x2½"	(8)¼"x2¼" TITEN TURBO
MSTA36	(13)0.148"x2½"	(13)0.148"x2½"
CS16	(5)0.148"x2½"	(5)0.148"x2½"
HOLDDOWNS AND BASE ANCHORS		
CONNECTOR	POST/STUDS	FOUNDATION
DTT2Z	(8)¼"x2½" SDS	½" TR EPOXIED 4"
ABU44Z	(12)0.162"x3½"	⅝" TR EPOXIED 6"
LTTP2	(12)0.148"x2½"	½" TR EPOXIED 4"
ABU66Z	(12)0.162"x3½"	⅝" TR EPOXIED 6"
ABU88Z	(18)0.162"x3½"	(2)⅝" TR EPOXIED 6"
HTT5	(26)0.162"x2½"	½" TR EPOXIED 7½"

CONNECTOR NOTES:
1. FOR CONNECTORS NOT SHOWN ABOVE, CONSULT THE SIMPSON STRONG-TIE CATALOG AND INSTALL FASTENERS THAT WILL PROVIDE THE GREATEST CAPACITY.
2. CONNECTORS SHOWN ARE SIMPSON STRONG-TIE. ALTERNATIVE MANUFACTURER IS ACCEPTABLE AS LONG AS PUBLISHED VALUES ARE GREATER.
3. CONNECTORS ARE LISTED IN ORDER FROM LEAST TO GREATEST CAPACITY. ANY CONNECTOR NOTED ON PLAN MAY BE SUBSTITUTED FOR A CONNECTOR OF THE SAME TYPE FURTHER DOWN THE LIST.

TABLE 4: ROOF ANGLES

ANGLE OF SLOPED ROOF	
ROOF PITCH	ROOF ANGLE
1/12	4.8°
2/12	9.5°
3/12	14°
4/12	18.4°
5/12	22.6°
6/12	26.6°
7/12	30.3°
8/12	33.7°
9/12	36.9°
10/12	39.8°
11/12	42.5°
12/12	45°
13/12	47.3°
14/12	49.4°

CONNECTOR NOTES:
1. THESE ANGLES ARE TO BE USED WHEN FIELD-ADJUSTABLE HANGERS ARE NOT INSTALLED.

HANGER IDENTIFICATION

HU210X SKR45 SLD26

- HU210X — BASE HANGER MODEL
- SKR — SKEW IDENTIFIER: SKR = SKEWED RIGHT, SKL = SKEWED LEFT
- 45 — ANGLE OF SKEW
- SLD — SLOPE IDENTIFIER: SLU = SLOPED UP, SLD = SLOPED DOWN
- 26 — ANGLE OF SLOPE

FLORIDA PRODUCT APPROAL:
FL# FOR TYPICAL SIMPSON PRODUCTS SPECIFIED ON PLAN ARE LISTED BELOW.
FL 10441, FL 10446, FL10456, FL 10531, FL 10860, FL 11473, FL 11496, FL 13872.

TYPICAL PLAN ABBREVIATIONS

ADJ	ADJACENT	LVL	LAMINATED VENEER LUMBER
BM	BEAM	MANUF	MANUFACTURER
BOT	BOTTOM	MONO	MONOLITHIC
BRG	BEARING	OC	ON CENTER
CMU	CONC. MASONRY UNIT	OSB	ORIENTED STRAND BOARD
CONC	CONCRETE	PERP	PERPENDICULAR
CONT	CONTINUOUS	PRE ENG	PRE-ENGINEERED
DBL	DOUBLE	PSF	POUNDS PER SQUARE FOOT
EA	EACH	PSI	POUNDS PER SQUARE INCH
EE	EACH END	PSL	PARALLEL STRAND LUMBER
EOR	ENGINEER OF RECORD	PT	PRESSURE TREATED
EQ	EQUAL	REINF	REINFORCING
EW	EACH WAY	REQD	REQUIRED
EXT	EXTERIOR	SF	SQUARE FOOT
FDN	FOUNDATION	SPF	SPRUCE PINE FUR
FT	FOOT	SYP	SOUTHERN YELLOW PINE
FTG	FOOTING	TR	THREADED ROD
GT	GIRDER TRUSS	TYP	TYPICAL
HGR	HANGER	UON	UNLESS OTHERWISE NOTED
HDR	HEADER	VERT	VERTICAL
HORIZ	HORIZONTAL		

VERY IMPORTANT FIELD ALTERATION AND PLAN SCALING NOTE:
PRIOR TO MAKING ANY STRUCTURAL FIELD MODIFICATIONS WHICH MAY VARY FROM THE INTENT OF THE ORIGINAL CONSTRUCTION DOCUMENTS, CONTRACTOR SHALL CONTACT FORTRESS ENGINEERING GROUP AT 904-821-7300. DO NOT SCALE DIMENSIONS FROM THESE DRAWINGS. ALL DIMENSIONS SHALL BE APPROVED BY THE ARCHITECT OR PROJECT CONTRACTOR. ***ANY FIELD MODIFICATIONS MADE PRIOR TO BEING APPROVED BY FEG ARE SUBJECT TO ADDITIONAL DESIGN & INSPECTIONS AND FEES.***

Fortress ENGINEERING GROUP
6622 SOUTHPOINT DR S SUITE 240
JACKSONVILLE, FL 32216
904-821-7300 FL CA# 34117

REVISION		
	DATE	TYPE
#1	-	-
#2	-	-
#3	-	-

EXTERIOR WALL REPAIR PLAN
130 ST. GEORGE ST
ST. AUGUSTINE, FL 32084

DRAWN BY	SAL
CHECKED BY	SLM

STEPHEN MCCORVEY
FL PE# 88723

STEPHEN LEIGH MCCORVEY LICENSE No. 88723 STATE OF FLORIDA PROFESSIONAL ENGINEER

This item has been digitally signed and sealed by Stephen L. McCorvey on the date adjacent to the seal.

Printed copies of this document are not considered signed and sealed and the signature must be verified on any electronic copies.

PRINT DATE
10/27/2025

FEG JOB#
FEG25 - 295

SHEET
C2
DESIGN SPECIFICATIONS & NOTES

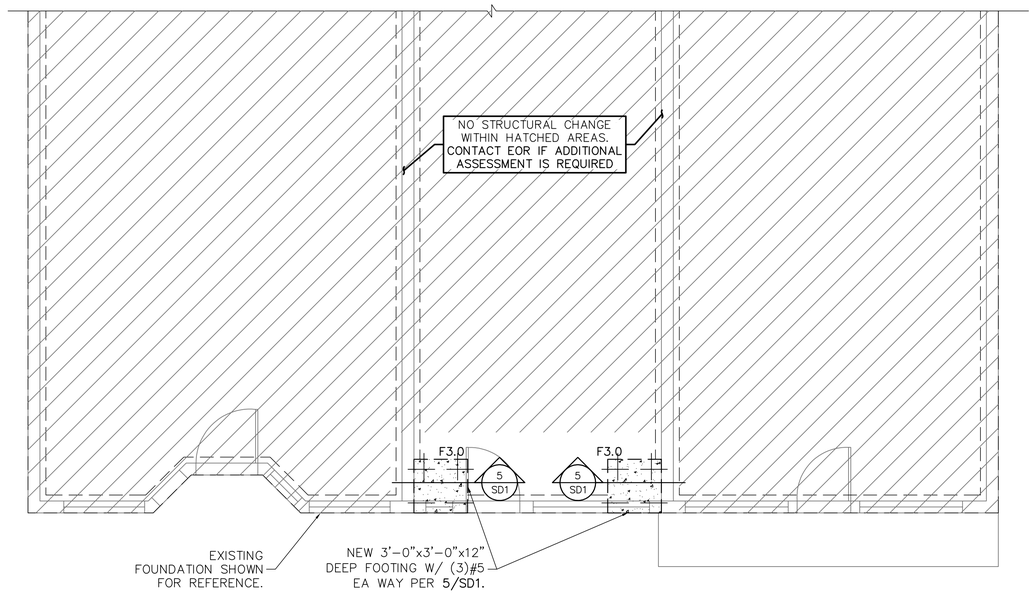

FOUNDATION PLAN

SCALE : ¼"=1'-0"

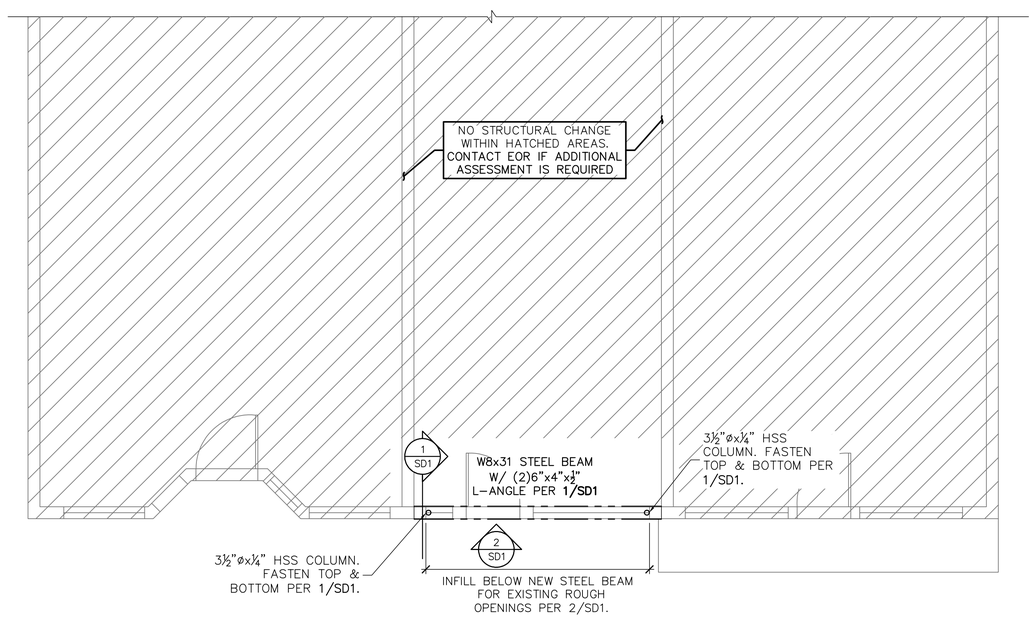

WALL FRAMING PLAN

SCALE : ¼"=1'-0"

IMPORTANT NOTES FOR RENOVATIONS, ADDITIONS AND EXISTING STRUCTURES

INFORMATION SHOWN ON THESE DRAWINGS REGARDING EXISTING CONDITIONS HAVE BEEN OBTAINED BASED ON AVAILABLE SOURCES AT THE TIME OF DESIGN INCLUDING ASSUMPTIONS BASED ON EXPERIENCE WITH SIMILAR STRUCTURES. THE ACTUAL AS-BUILT CONDITION FOUND IN THE FIELD MAY VARY FROM INFORMATION INDICATED IN THESE DRAWINGS. CONTRACTOR SHALL VERIFY ALL EXISTING CONDITIONS AND NOTIFY ENGINEER IN WRITING BEFORE BEGINNING NEW CONSTRUCTION OF ANY INTERFERENCES AND/OR DISCREPANCIES THAT MIGHT EXIST BETWEEN THESE DRAWINGS AND/OR ACTUAL FIELD CONDITIONS. CONTRACTOR SHALL REPAIR/REPLACE ANY DAMAGED EXISTING STRUCTURAL MEMBERS DISCOVERED DURING CONSTRUCTION. THE CONTRACTOR SHALL PROVIDE ALL TEMPORARY BRACING/SHORING, TEMPORARY SUPPORTS AND OTHER SUCH ITEMS OR OTHER MEASURES NECESSARY TO PROTECT THE STRUCTURE AND ANY PERSONNEL DURING CONSTRUCTION. SAFETY OF THE STRUCTURE AND PERSONNEL DURING CONSTRUCTION ARE THE SOLE RESPONSIBILITY OF THE CONTRACTOR.

FEMA RELATED DESIGN CRITERIA

FEMA (BFE) = **FEMA AE 7**

GENERAL FOUNDATION NOTES

THE STRUCTURAL ENGINEER DID NOT ESTABLISH FINISHED FLOOR ELEVATIONS. THE FINISHED FLOOR ELEVATION SHALL MEET THE MINIMUM REQUIRED ELEVATIONS REQUIRED BY THE FRC & LOCAL BUILDING CODES. IT IS THE RESPONSIBILITY OF THE ARCHITECT AND/OR CONTRACTOR TO ESTABLISH THE FFE AND COORDINATE THAT IT MEETS ALL REQUIREMENTS PRESCRIBED IN THE FLORIDA RESIDENTIAL CODE FRC 2023, FBC 2023 AND ALL LOCAL BUILDING CODES

VERY IMPORTANT FIELD ALTERATION AND PLAN SCALING NOTE:
PRIOR TO MAKING ANY STRUCTURAL FIELD MODIFICATIONS WHICH MAY VARY FROM THE INTENT OF THE ORIGINAL CONSTRUCTION DOCUMENTS, CONTRACTOR SHALL CONTACT FORTRESS ENGINEERING GROUP AT 904-821-7300. DO NOT SCALE DIMENSIONS FROM THESE DRAWINGS. ALL DIMENSIONS SHALL BE APPROVED BY THE ARCHITECT OR PROJECT CONTRACTOR. ***ANY FIELD MODIFICATIONS MADE PRIOR TO BEING APPROVED BY FEG ARE SUBJECT TO ADDITIONAL DESIGN & INSPECTIONS AND FEES.***

Fortress ENGINEERING GROUP
6622 SOUTHPOINT DR S SUITE 240
JACKSONVILLE, FL 32216
904-821-7300 FL CA# 34117

REVISION		
	DATE	TYPE
#1	-	-
#2	-	-
#3	-	-

EXTERIOR WALL REPAIR PLAN
130 ST. GEORGE ST
ST. AUGUSTINE, FL 32084

DRAWN BY	SAL
CHECKED BY	SLM

STEPHEN MCCORVEY
FL PE# 88723

STEPHEN LEIGH MCCORVEY LICENSE No. 88723 STATE OF FLORIDA PROFESSIONAL ENGINEER

This item has been digitally signed and sealed by Stephen L. McCorvey on the date adjacent to the seal.

Printed copies of this document are not considered signed and sealed and the signature must be verified on any electronic copies.

PRINT DATE
10/27/2025

FEG JOB#
FEG25 - 295

SHEET

S1

FOUNDATION & WALL FRAMING PLAN

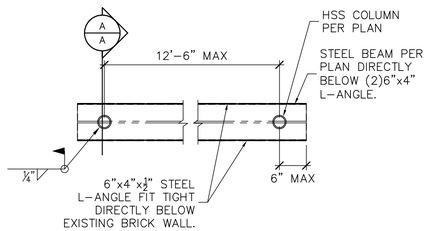

PLAN VIEW

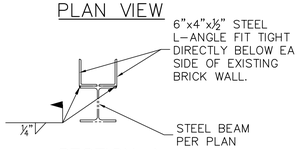

SECTION A-A

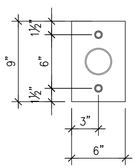

BASE PLATE DETAIL

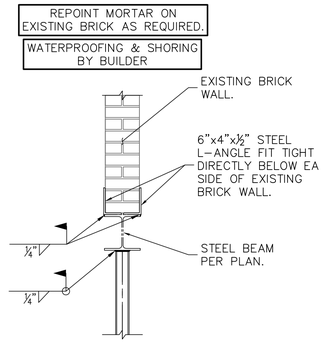

SECTION VIEW A-A

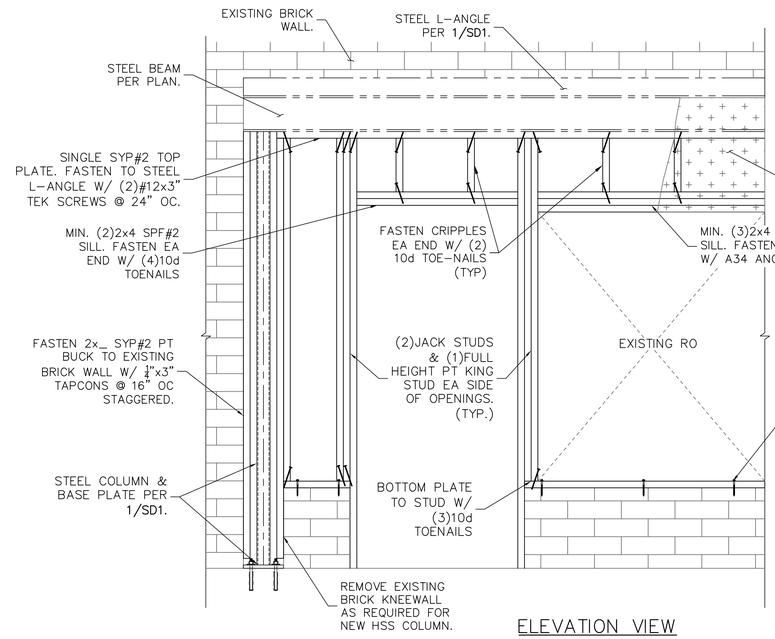

ELEVATION VIEW

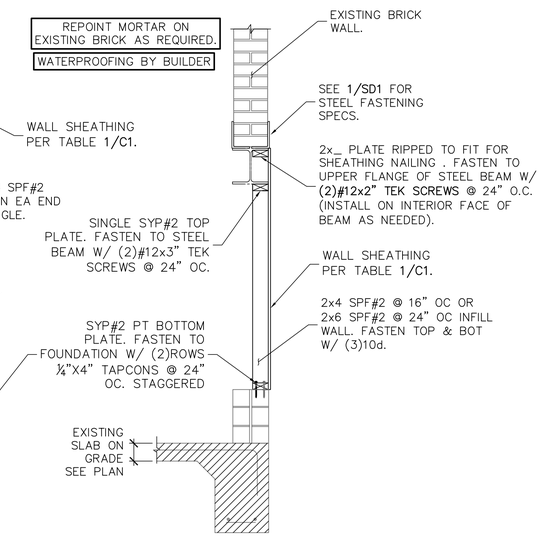

SECTION VIEW

1 SD1 STEEL BEAM W/ ANGLE & HSS COLUMN CONNECTION

TYPICAL, APPLY WHERE APPLICABLE

2 SD1 WOOD INFILL WALL

TYPICAL, APPLY WHERE APPLICABLE

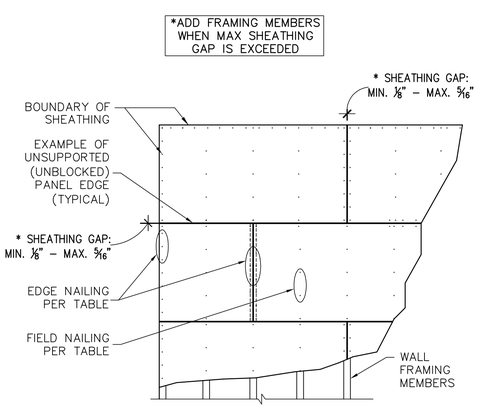

3 SD1 WALL SHEATHING LAYOUT

TYPICAL, APPLY WHERE APPLICABLE

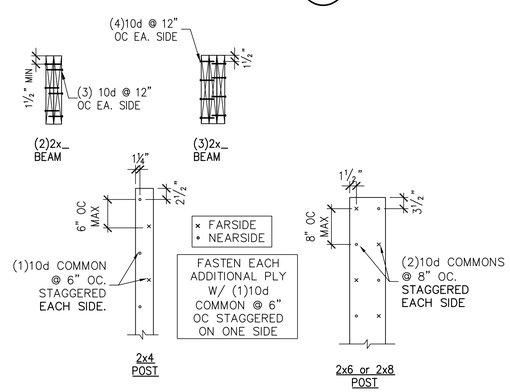

NOTES:
1. TYPICAL CONNECTION AT STUD COLUMNS, JACK-TO-KING ASSEMBLIES, CORNER POSTS, ETC.
2. SEE FASTENMASTER FOR FLATLOK INSTALLATION RECOMMENDATIONS

4 SD1 BUILT UP MEMBER FASTENING

TYPICAL, APPLY WHERE APPLICABLE

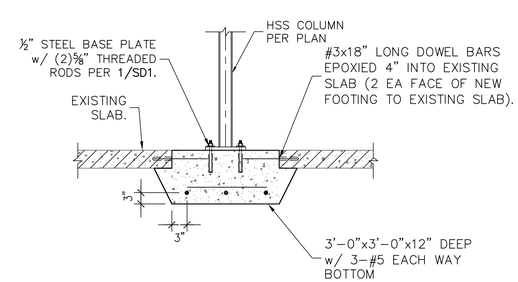

5 SD1 NEW FOOTING DETAIL

SCALE: 3/8"=1'-0"

Fortress ENGINEERING GROUP
6622 SOUTHPOINT DR S SUITE 240
JACKSONVILLE, FL 32216
904-821-7300 FL CA# 34117

REVISION		
	DATE	TYPE
#1	-	-
#2	-	-
#3	-	-

EXTERIOR WALL REPAIR PLAN
130 ST. GEORGE ST
ST. AUGUSTINE, FL 32084

DRAWN BY	SAL
CHECKED BY	SLM

STEPHEN MCCORVEY
FL PE# 88723

STEPHEN LEIGH MCCORVEY LICENSE No. 88723 STATE OF FLORIDA PROFESSIONAL ENGINEER

This item has been digitally signed and sealed by Stephen L. McCorvey on the date adjacent to the seal.

Printed copies of this document are not considered signed and sealed and the signature must be verified on any electronic copies.

PRINT DATE
10/27/2025

FEG JOB#
FEG25 - 295

SHEET
SD1
FRAMING DETAILS

VERY IMPORTANT FIELD ALTERATION AND PLAN SCALING NOTE:
PRIOR TO MAKING ANY STRUCTURAL FIELD MODIFICATIONS WHICH MAY VARY FROM THE INTENT OF THE ORIGINAL CONSTRUCTION DOCUMENTS, CONTRACTOR SHALL CONTACT FORTRESS ENGINEERING GROUP AT 904-821-7300.
DO NOT SCALE DIMENSIONS FROM THESE DRAWINGS. ALL DIMENSIONS SHALL BE APPROVED BY THE ARCHITECT OR PROJECT CONTRACTOR. ***ANY FIELD MODIFICATIONS MADE PRIOR TO BEING APPROVED BY FEG ARE SUBJECT TO ADDITIONAL DESIGN & INSPECTIONS AND FEES.***

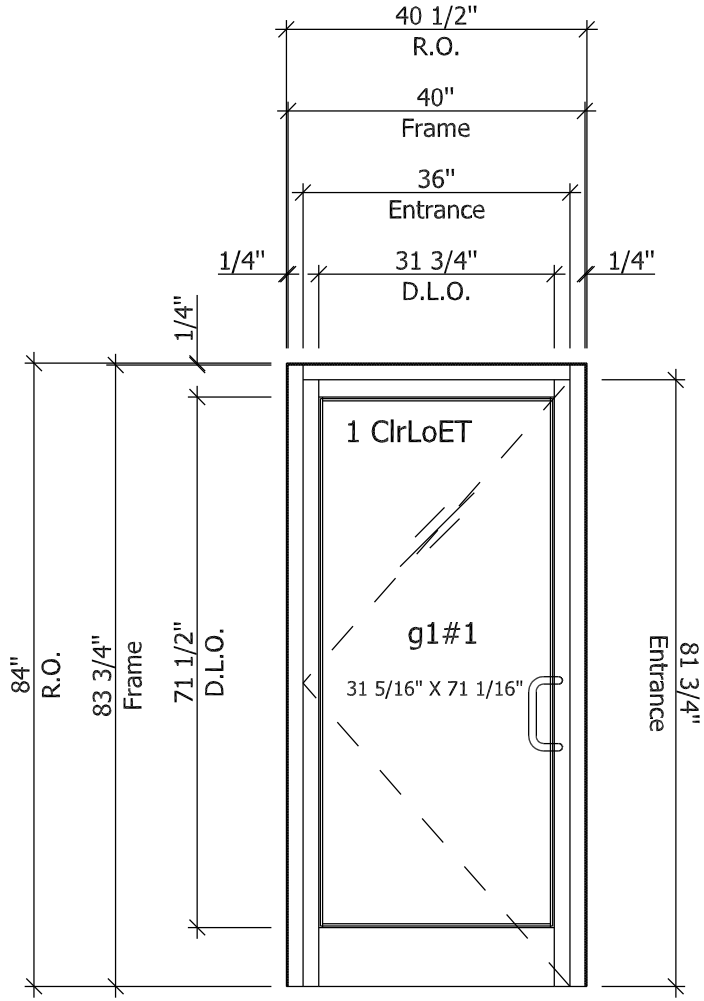

1

130 St George St - Black-(SGD) - Black- 3068 Hinges,
SrfClsr, MSLock (1Thus)
Frame: YES 45 FI : Storefront : Screw Spline

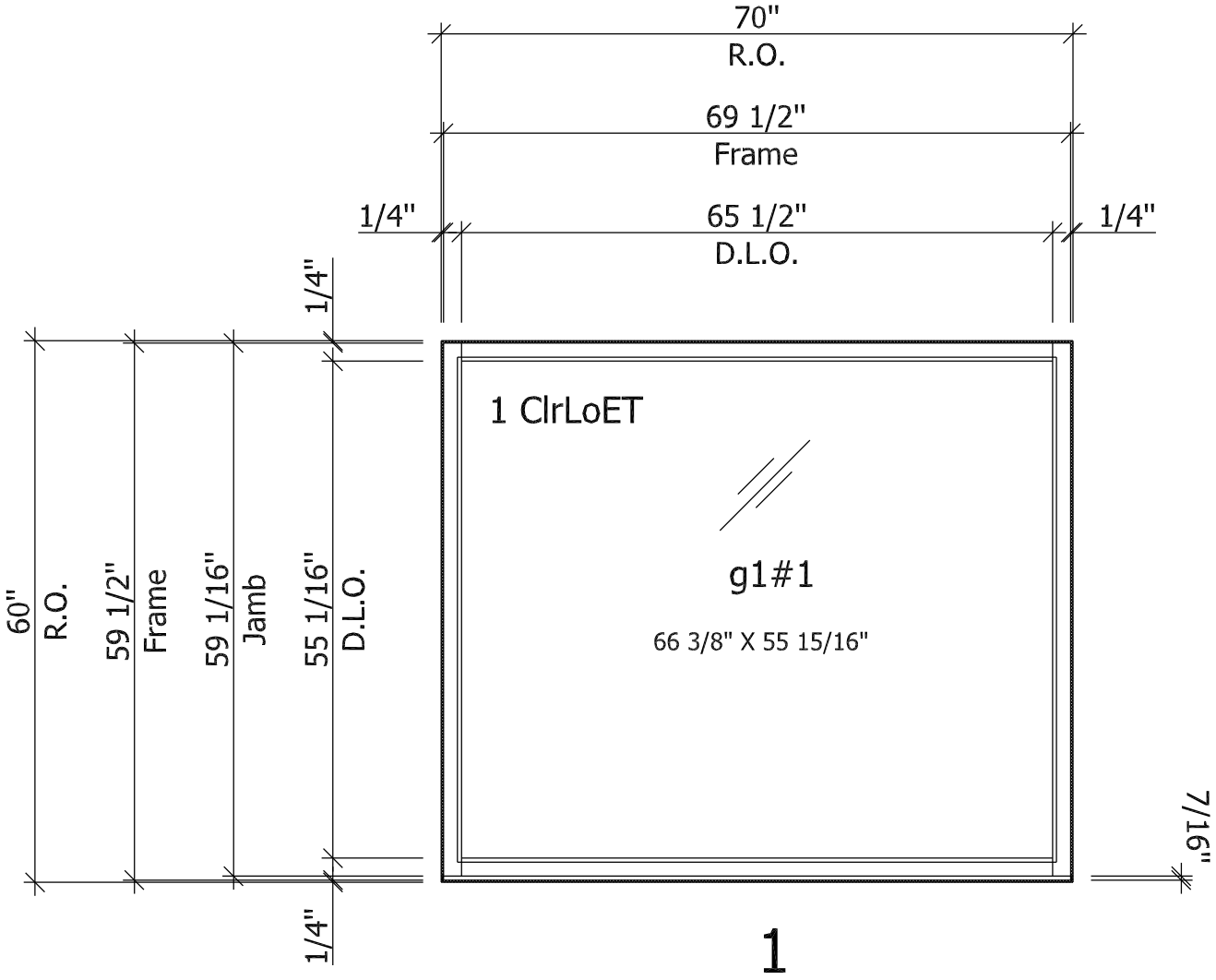

130 St George St - Black-(Fixed Light) - Black- (1Thus)
Frame: YES 45 FI : Storefront : Screw Spline

Submitted on 1/26/26 for Building Permit
Added to application by Staff

YKK ap®

www.ykkap.com

Landmark Hospital - Naples, FL

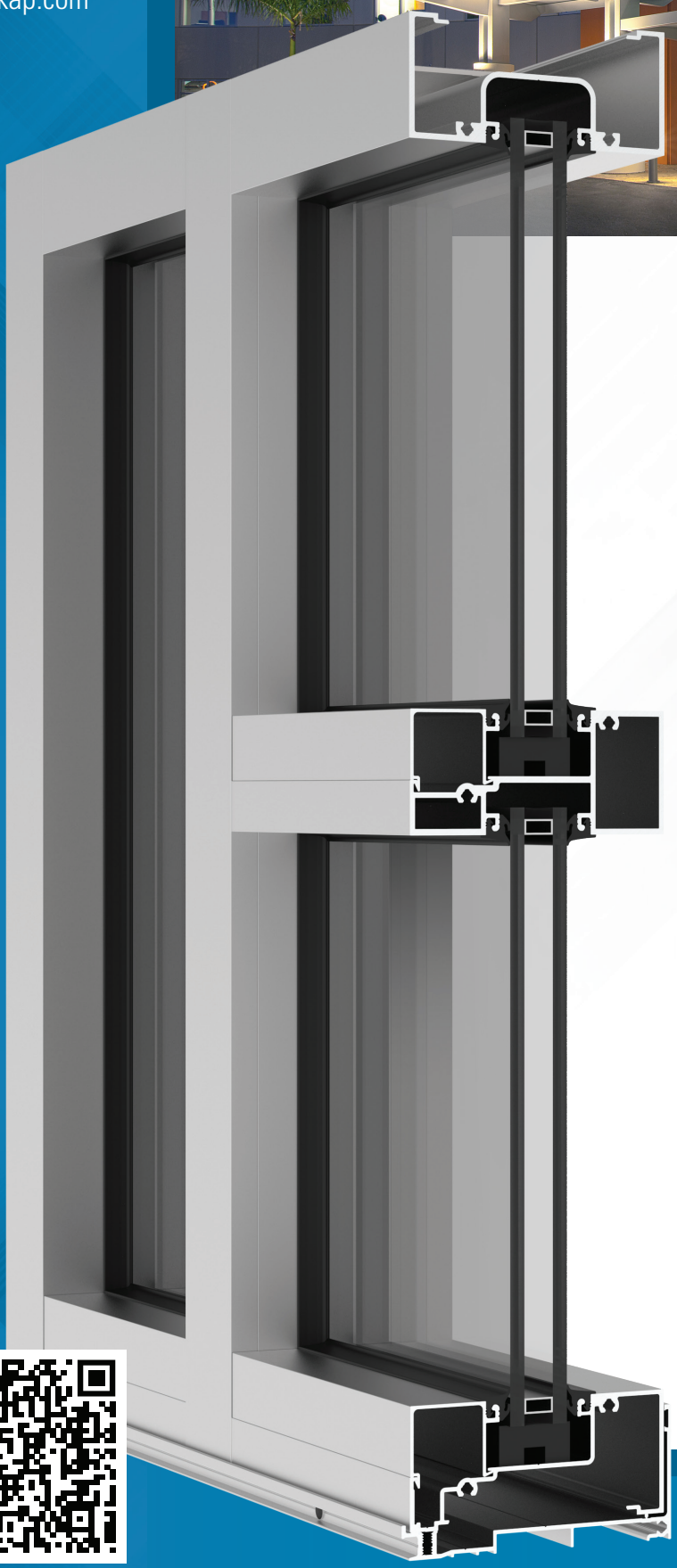

YES 45 FI

Flush Glazed, Center Set Storefront System with Insulating Glass

The **YES 45 FI** is a center set, flush glazed framing system developed for 1" insulating glass and other types of infill panels of varying thicknesses. The system will accommodate our hinged storefornt mullion, as well as an expansion mullion; these mullions allow more creative freedom where curves and angles become a functional part of the design.

- Outside and Inside Glazing options
- 1" Standard Insulating Glazing with several glass infill options
- High Performance Sill Flashing
  - No blind seals
  - Tall back leg for enhanced water resistance
  - Patented 3-point attachment of end dam
- Screw Spline and Shear Block options, along with a Can/Ribbon configuration
- Integrates with our YKK AP Entrances and Sun Control Systems

Configuration:

Glazing	Glass Setting	Installation
Outside or Inside	Center Set	Screw Spline, Shear Block or Can/Ribbon

Thermal Values:

U-Factor:	Values as low as **0.41***
CRF:	Minimum **33**frame and **58**glass

*Based on NFRC 100. Lower values may be achieved through further simulation.

YES 45 FI SPECS

Base Depth	4-1/2"	
Sightline	2"	
Config	Outside & Inside Glazed / Center Set	
Tested Glass	1" IGU with Low-E (C.O.G. U-Factor: 0.29)	
Test	**Results**	**Standards**
Air Infiltration	0.06 CFM/FT^2 (1.10 m^3/h·m^2) @ 6.24 PSF (299 Pa)	ASTM E 283
Water Infiltration	**Static:** 12 PSF (575 Pa)	ASTM E 331 AAMA 501
Acoustical (1" IGU)	**Standard STC:** 32 **Standard OITC:** 27	ASTM E 90 ASTM E 1425
	Laminated STC: 37 **Laminated OITC:** 30	

Thermal Performance

Mullion Depth (1" IGU)	U-Factor - BTU/hr·ft^2·°F						CRF	
2" x 4-1/2"	0.49	0.48	0.46	0.45	0.43	0.41	33	58
Center of Glass	**0.30**	**0.28**	**0.26**	**0.24**	**0.22**	**0.20**	**Frame**	**Glass**
AAMA 507 & NFRC 100							AAMA 1503	

Finish Options

Type	Standard
Factory Anodized	AAMA 612
Organic Paints	AAMA 2604 AAMA 2605

Various System Options

Sidelite Bases, Glass Infills, Expansion Mullion, 90°, 135° and 158° Static Mullions, Hinged Mullions

Thermal Imaging

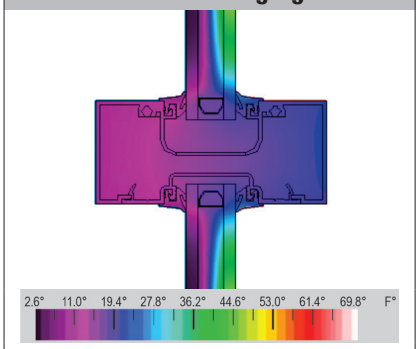

Frame temperature values are based on 0°F exterior and 70°F interior air temperatures.

Sill Flashing Design

- 2" back leg on sill flashing – enhanced water resistance in the field and in water testing
- Three point attachment of end dam, with a foldable tab and two screws into flashing splines
- No sill anchoring required if end reaction is less than 500 lbs
- No secondary penetration of sill and flashing when properly sealed

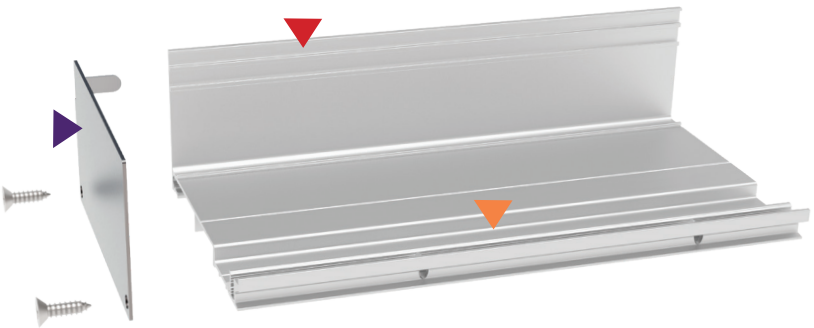

Hinged Mullions

With the use of our hinged mullion setup, the YES 45 system direction can be changed to allow angles and curves to create more a aesthetic and functional design with your building project. The 3 mullion options available are: 93-133 degrees, 134-170 degrees and 165-180 degrees. Combined with a 90, 135 or 158 degree static mullion, the design possibilities are endless.

You can view details for the hinged mullions on the **Product Guide**.

Glass Infill Options

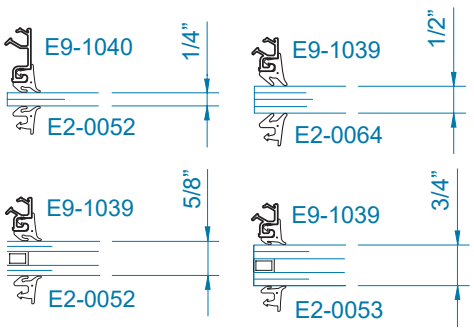

Can/Ribbon Configuration

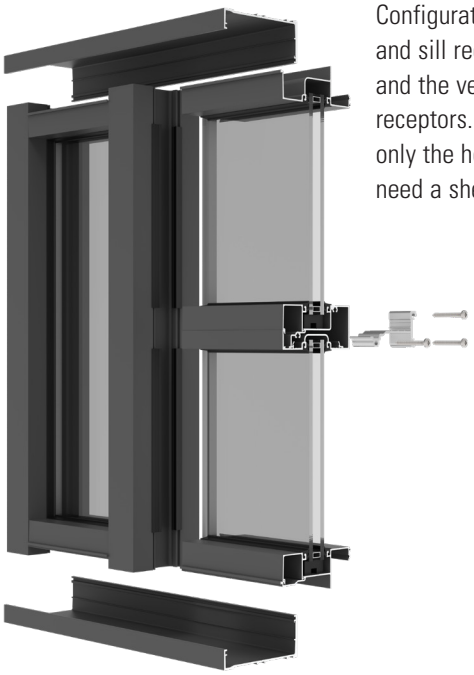

Configuration where the head and sill receptors are continuous and the verticals snap into the receptors. For more stability, only the horizontal mullions need a shear block.

Additional information including CAD details, CSI specs, test reports and installation instructions are found on the Product Guide by clicking this link or visiting **www.ykkap.com/commercial/productguide**

©2025 YKK AP America Inc.

Submitted on 1/26/26 for Building Permit
Added to application by Staff

6/30/2023 10:38 AM

YKK AP America Inc.

YES 45 FI ALUMINUM STOREFRONT SYSTEM (NON-HVHZ) (NON-IMPACT)

INSTALLATION NOTES:

1. SEE SHEET 6 FOR ANCHOR TYPE REQUIREMENTS, MINIMUM EMBEDMENT, AND MINIMUM EDGE DISTANCES. ALL ANCHOR REQUIREMENTS MUST BE ADHERED TO. ANY DEVIATIONS FROM ANCHOR REQUIREMENTS REQUIRES SEPARATE EVALUATION AND APPROVAL.

2. ONE (1) INSTALLATION ANCHOR IS REQUIRED AT EACH ANCHOR LOCATION SHOWN.

3. THE NUMBER OF INSTALLATION ANCHORS DEPICTED IS THE MINIMUM NUMBER OF ANCHORS TO BE USED FOR PRODUCT INSTALLATION.

4. INSTALL INDIVIDUAL INSTALLATION ANCHORS WITHIN A TOLERANCE OF ±1/2 INCH OF THE DEPICTED LOCATION IN THE ANCHOR LAYOUT DETAIL (I.E., WITHOUT CONSIDERATION OF TOLERANCES). TOLERANCES ARE NOT CUMULATIVE FROM ONE INSTALLATION ANCHOR TO THE NEXT.

5. SHIM AS REQUIRED AT EACH INSTALLATION ANCHOR WITH LOAD BEARING SHIM(S). MAXIMUM ALLOWABLE SHIM STACK TO BE 3/8 INCH. SHIM WHERE SPACE OF 1/16 INCH OR GREATER OCCURS. SHIM(S) SHALL BE CONSTRUCTED OF HIGH DENSITY PLASTIC OR BETTER.

6. MINIMUM EMBEDMENT AND EDGE DISTANCE EXCLUDE WALL FINISHES, INCLUDING BUT NOT LIMITED TO STUCCO, FOAM, BRICK VENEER, AND SIDING.

7. INSTALLATION ANCHORS AND ASSOCIATED HARDWARE MUST BE MADE OF CORROSION RESISTANT MATERIAL OR HAVE A CORROSION RESISTANT COATING.

8. FOR HOLLOW BLOCK AND GROUT FILLED BLOCK, DO NOT INSTALL INSTALLATION ANCHORS INTO MORTAR JOINTS. EDGE DISTANCE IS MEASURED FROM FREE EDGE OF BLOCK OR EDGE OF MORTAR JOINT INTO FACE SHELL OF BLOCK.

9. INSTALLATION ANCHORS SHALL BE INSTALLED IN ACCORDANCE WITH ANCHOR MANUFACTURER'S INSTALLATION INSTRUCTIONS, AND ANCHORS SHALL NOT BE USED IN SUBSTRATES WITH STRENGTHS LESS THAN THE MINIMUM STRENGTH SPECIFIED BY THE ANCHOR MANUFACTURER.

10. INSTALLATION ANCHOR CAPACITIES FOR PRODUCTS HEREIN ARE BASED ON SUBSTRATE MATERIALS WITH THE FOLLOWING PROPERTIES:
    A. WOOD - MINIMUM SPECIFIC GRAVITY OF 0.55.
    B. CONCRETE -MINIMUM COMPRESSIVE STRENGTH OF 3000 PSI.
    C. MASONRY - CMU UNIT STRENGTH CONFORMS TO ASTM C-90, WITH MIN. COMPRESSIVE STRENGTH OF 2000 PSI AND GROUT CONFORMS TO ASTM C 476, MIN. GROUT COMPRESSIVE STRENGTH OF 2000 PSI.
    D. STEEL - MINIMUM YIELD STRENGTH OF 36 KSI. MINIMUM 12 GA. WALL THICKNESS.
    E. STEEL - MINIMUM YIELD STRENGTH OF 36 KSI. MINIMUM 18 GA. WALL THICKNESS WITH 2X WOOD BACKING.
    F. ALUMINUM - MINIMUM 1/8 INCH THICK 6063-T5 ALUMINUM.

GENERAL NOTES:

1. THE PRODUCT SHOWN HEREIN IS DESIGNED AND MANUFACTURED TO COMPLY WITH THE CURRENT FLORIDA BUILDING CODE (FBC), EXCLUDING HVHZ AND HAS BEEN EVALUATED ACCORDING TO THE FOLLOWING:
    - AAMA 501-15
    - ASTM E283-19
    - ASTM E330-14
    - ASTM E331-00(16)

2. ADEQUACY OF THE EXISTING STRUCTURAL CONCRETE/MASONRY, 2X FRAMING AND METAL STUD FRAMING AS A MAIN WIND FORCE RESISTING SYSTEM CAPABLE OF WITHSTANDING AND TRANSFERRING APPLIED PRODUCT LOADS TO THE FOUNDATION IS THE RESPONSIBILITY OF THE ENGINEER OR ARCHITECT OF RECORD FOR THE PROJECT OF INSTALLATION.

3. 1X AND 2X BUCKS (WHEN USED) SHALL BE DESIGNED AND ANCHORED TO PROPERLY TRANSFER ALL LOADS TO THE STRUCTURE. BUCK DESIGN AND INSTALLATION IS THE RESPONSIBILITY OF THE ENGINEER OR ARCHITECT OF RECORD FOR THE PROJECT OF INSTALLATION.

4. THE INSTALLATION DETAILS DESCRIBED HEREIN ARE GENERIC AND MAY NOT REFLECT ACTUAL CONDITIONS FOR A SPECIFIC SITE. IF SITE CONDITIONS CAUSE INSTALLATION TO DEVIATE FROM THE REQUIREMENTS DETAILED HEREIN, A LICENSED ENGINEER OR ARCHITECT SHALL PREPARE SITE SPECIFIC DOCUMENTS FOR USE WITH THIS DOCUMENT.

5. APPROVED IMPACT PROTECTIVE SYSTEM **IS REQUIRED** ON THIS PRODUCT IN AREAS REQUIRING IMPACT RESISTANCE. SEE SHEET 3 FOR GLAZING DETAIL. GLASS SHALL MEET THE REQUIREMENTS OF ASTM E 1300.

6. STOREFRONT FRAME MATERIAL: ALUMINUM 6063-T5

7. ALL STRUCTURAL MATERIALS & DISSIMILAR METALS SHALL BE PROTECTED, TREATED, PAINTED, COATED, AND/OR ISOLATED AS REQUIRED IN THE APPLICABLE SECTIONS OF THE CURRENT FLORIDA BUILDING CODE AND REFERENCED DESIGN SPECIFICATIONS.

TABLE OF CONTENTS

SHEET	SHEET DESCRIPTION
1	INSTALLATION & GENERAL NOTES
2	ELEVATION
3	GLASS AND MULLION LOAD TABLE & GLAZING DETAIL
4	DOOR MULLION LOAD TABLE
5	DOOR MULLION LOAD TABLE
6	ANCHOR LOAD TABLE & ANCHOR LAYOUT
7	VERTICAL SECTIONS
8	HORIZONTAL SECTIONS
9	HORIZONTAL SECTIONS
10	COMPONENTS & BILL OF MATERIALS

INSTRUCTIONS FOR USE:

1. DETERMINE DESIGN WIND LOAD REQUIREMENTS BASED ON WIND VELOCITY, BLDG, HEIGHT, WIND ZONE USING APPLICABLE ASCE 7 STANDARD.
2. SEE CHART ON SHEET 3 FOR DESIGN LOAD CAPACITY OF DESIRED GLASS SIZE. GLASS SELECTION SHALL BE IN ACCORDANCE WITH ASTM E1300.
3. CHECK MULLION CAPACITY FOR A GIVEN SPACING AND HEIGHT USING CHART ON SHEETS 3, 4, AND 5, THE CAPACITY SHOULD EXCEED THE DESIGN LOAD.
4. USING CHART ON SHEET 6 SELECT ANCHOR OPTION WITH DESIGN RATING MORE THAN DESIGN LOAD SPECIFIED IN STEP 1 ABOVE.
5. THE LOWEST VALUE RESULTING FROM STEP 2, 3 AND 4 SHALL APPLY TO ENTIRE SYSTEM.

YKK AP AMERICA
1229 HWY 441 BYPASS
DUBLIN, GEORGIA 31021
PH: (478)277-1955 FAX: (678)838-6001

TITLE: YES 45 FI ALUMINUM STOREFRONT SYSTEM (NON-HVHZ) (NON-IMPACT)
INSTALLATION & GENERAL NOTES

PREPARED BY:
BUILDING DROPS, INC.
398 E. DANIA BEACH BLVD., STE. 338
DANIA BEACH, FL 33004
PH: (954)399-8478
FAX: (954)744.4738
WEB: www.buildingdrops.com

REMARKS	BY	DATE
A-VALIDATOR'S COMM.	AR	10.12.17
B-2023 FBC CODE UPDATE	MS	04.21.23

THE INSTALLATION DETAILS DESCRIBED HEREIN ARE GENERIC AND MAY NOT REFLECT ACTUAL CONDITIONS FOR A SPECIFIC SITE. IF SITE CONDITIONS CAUSE INSTALLATION TO DEVIATE FROM THE REQUIREMENTS DETAILED HEREIN, A LICENSED ENGINEER OR ARCHITECT SHALL PREPARE SITE SPECIFIC DOCUMENTS FOR USE WITH THIS DOCUMENT.

Digitally signed by Hermes F. Norero, P.E.
Reason: I am approving this document
Date: 2023.08.02 11:20:51 -04'00'

HERMES F. NORERO
LICENSE
No. 73778
STATE OF
FLORIDA
PROFESSIONAL ENGINEER

HERMES F. NORERO, P.E.
FLORIDA P.E. No. 73778
BUILDING DROPS, INC.
398 E. DANIA BEACH BLVD. # 338
DANIA BEACH, FL 33004
FBPE CERT. OF AUTHORIZATION No. 29578

FL #: FL12926

DATE: 08.10.17

DWG. BY: RV | CHK. BY: HFN

SCALE: NTS

DWG. #: YKK216

SHEET: 1 OF 10

s:\projects\ykk ap america, inc\cc-23-0226.1 - fbc 2023 (8th edition) commercial code change\dwgs\fl12926\ykk216.dwg

Submitted on 1/26/26 for Building Permit
Added to application by Staff

6/30/2023 10:38 AM

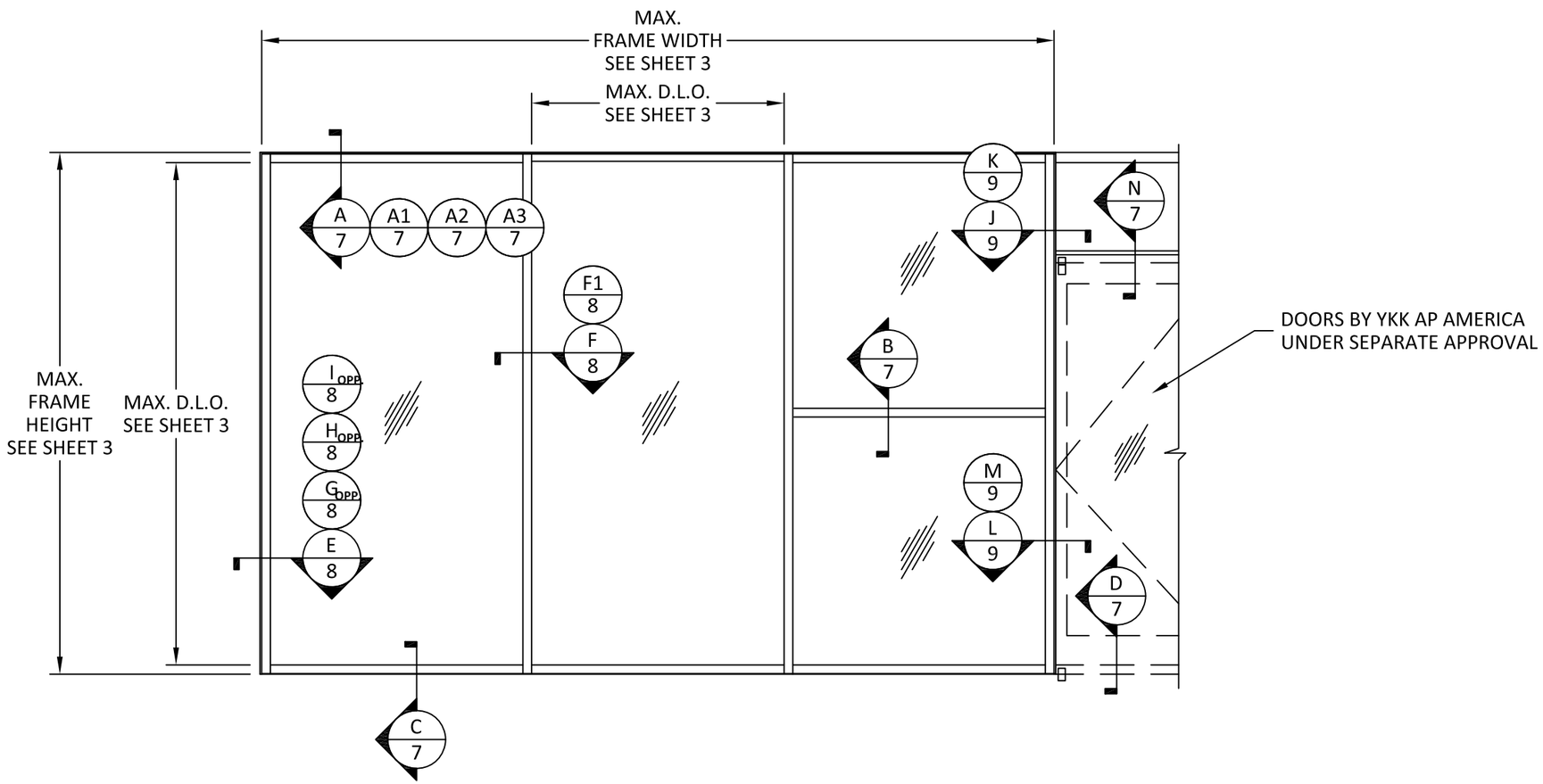

ELEVATION

TYPICAL YES 45 FI STOREFRONT

YKK AP AMERICA
1229 HWY 441 BYPASS
DUBLIN, GEORGIA 31021
PH: (478)277-1955 FAX: (678)838-6001

TITLE: YES 45 FI ALUMINUM STOREFRONT SYSTEM (NON-HVHZ) (NON-IMPACT)
ELEVATION

PREPARED BY:
BUILDING DROPS, INC.
398 E. DANIA BEACH BLVD., STE. 338
DANIA BEACH, FL 33004
PH: (954)399-8478
FAX: (954)744.4738
WEB: www.buildingdrops.com

REMARKS	BY	DATE
A-VALIDATOR'S COMM.	AR	10.12.17
B-2023 FBC CODE UPDATE	MS	04.21.23

THE INSTALLATION DETAILS DESCRIBED HEREIN ARE GENERIC AND MAY NOT REFLECT ACTUAL CONDITIONS FOR A SPECIFIC SITE. IF SITE CONDITIONS CAUSE INSTALLATION TO DEVIATE FROM THE REQUIREMENTS DETAILED HEREIN, A LICENSED ENGINEER OR ARCHITECT SHALL PREPARE SITE SPECIFIC DOCUMENTS FOR USE WITH THIS DOCUMENT.

HERMES F. NORERO LICENSE No. 73778 STATE OF FLORIDA PROFESSIONAL ENGINEER

HERMES F. NORERO, P.E.
FLORIDA P.E. No. 73778
BUILDING DROPS, INC
398 E. DANIA BEACH BLVD. # 338
DANIA BEACH, FL 33004
FBPE CERT. OF AUTHORIZATION No. 29578

FL #: FL12926

DATE: 08.10.17

DWG. BY: RV | CHK. BY: HFN

SCALE: NTS

DWG. #: YKK216

SHEET: 2 OF 10

s:\projects\ykk ap america, inc\cc-23-0226.1 - fbc 2023 (8th edition) commercial code change\dwgs\fl12926\ykk216.dwg

Submitted on 1/26/26 for Building Permit
Added to application by Staff

6/30/2023 10:38 AM

GLASS LOAD TABLE

GLASS LOAD CAPACITY (PSF)		
NOMINAL DIMS. (IN)		INSUL. GLASS
DLO WIDTH	DLO HEIGHT	EXT. (+) INT. (-)
24	60	56.0
30		46.0
36		38.3
42		32.9
48		28.8
54		25.6
60		23.0
66		25.3
70		26.8
24	66	54.7
30		46.0
36		38.3
42		32.9
48		28.8
54		25.6
60		23.0
66		20.9
70		22.2
24	72	53.7
30		45.3
36		38.3
42		32.9
48		28.8
54		25.6
60		23.0
66		20.9
24	78	52.9
30		44.4
36		38.3
42		32.9
48		28.8
69		25.6
60		23.0
61		22.6
24	84	52.2
30		43.6
36		38.0
42		32.9
48		28.8
54		25.6
56		24.6

GLASS LOAD CAPACITY (PSF)		
NOMINAL DIMS. (IN)		INSUL. GLASS
DLO WIDTH	DLO HEIGHT	EXT. (+) INT. (-)
24	90	51.7
30		43.0
36		37.3
42		32.9
48		28.8
53		26.0
24	96	51.2
30		42.5
36		36.7
42		32.8
48		28.8
49		28.2
24	102	50.8
30		42.0
36		36.3
42		32.2
46		30.0
24	104	50.6
30		41.9
36		36.1
42		32.1
46		30.0
24	108	50.4
30		41.6
36		35.8
42		31.8
24	114	50.1
30		41.3
36		35.5
41		32.0
24	116	50.0
30		41.1
36		35.3
41		31.8

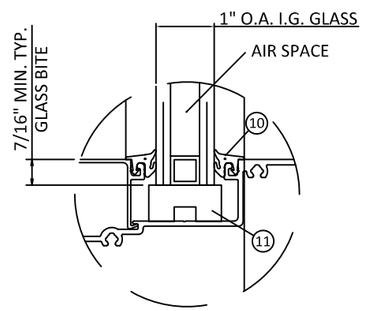

GLAZING DETAIL

GLAZING NOTES:
1. GLASS TYPE AND THICKNESS SHALL COMPLY WITH ASTM E1300 REQUIREMENTS AS WELL AS APPLICABLE SAFETY GLAZING REQUIREMENTS PER THE FBC. THICKNESS, TEMPER, AND SAFETY GLAZING REQUIREMENTS SHALL BE REVIEWED ON A SITE SPECIFIC BASIS.
2. SETTING BLOCK DUROMETER HARDNESS OF 70-90 (SHORE A) AS REFERENCED IN FBC CHAPTER 24.
3. SETTING BLOCKS TO BE LOCATED AT 1/4 SPAN LENGTH FOR GLASS WIDER THAN 36" AS PER FBC CHAPTER 24.
4. D.L.O. AND DESIGN PRESSURES MAY NOT EXCEED MAX VALUES IN GLASS CHARTS.

ALUMINUM BOX SPACER:
AROUND THE PERIMETER OF THE GLASS

PRIMARY SEALANT:
POLYISOBUTYLENE (PIB)

SECONDARY SEALANT:
STRUCTURAL SILICONE INTENDED FOR FABRICATION OF INSULATED GLASS UNITS.

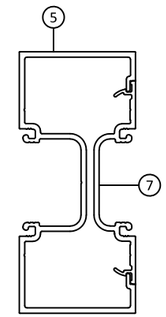

STANDARD MULLION M1

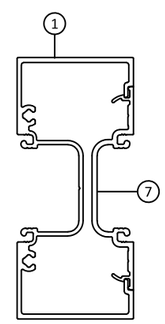

STANDARD MULLION M2

MULLION LOAD TABLE

MULLION DESIGN LOAD CAPACITY - PSF		
NOMINAL DIMS.		DESIGN PRESSURE
WIDTH (W)	FRAME HEIGHT	EXT. (+) INT. (-)
24	60	56.0
30		56.0
36		56.0
42		56.0
48		54.0
54		48.0
60		43.2
66		39.3
72		36.0
24	66	56.0
30		56.0
36		56.0
42		56.0
48		49.1
54		43.6
60		39.3
66		35.7
72		32.7
24	72	56.0
30		56.0
36		56.0
42		51.4
48		45.0
54		40.0
60		36.0
66		32.7
72		30.0
24	78	56.0
30		56.0
36		55.4
42		47.5
48		41.5
54		36.9
60		33.2
66		30.2
24	84	56.0
30		56.0
36		51.4
42		44.1
48		38.6
54		34.3
60		30.9

MULLION DESIGN LOAD CAPACITY - PSF		
NOMINAL DIMS.		DESIGN PRESSURE
WIDTH (W)	FRAME HEIGHT	EXT. (+) INT. (-)
24	90	56.0
30		56.0
36		48.0
42		41.1
48		36.0
54		32.0
24	96	56.0
30		54.0
36		45.0
42		38.6
48		33.8
54		30.0
24	102	56.0
30		50.8
36		42.4
42		36.3
48		31.8
24	108	56.0
30		48.0
36		40.0
42		34.3
48		30.0
24	114	51.0
30		40.8
36		34.0
42		29.2
24	120	43.7
30		35.0
36		29.2
42		25.0

YKK AP AMERICA
1229 HWY 441 BYPASS
DUBLIN, GEORGIA 31021
PH: (478)277-1955 FAX: (678)838-6001

TITLE: YES 45 FI ALUMINUM STOREFRONT SYSTEM (NON-HVHZ) (NON-IMPACT) GLASS AND MULLION LOAD TABLE & GLAZING DETAIL

PREPARED BY: BUILDING DROPS, INC.
398 E. DANIA BEACH BLVD., STE. 338
DANIA BEACH, FL 33004
PH: (954)399-8478
FAX: (954)744.4738
WEB: www.buildingdrops.com

REMARKS	BY	DATE
A-VALIDATOR'S COMM.	AR	10.12.17
B-2023 FBC CODE UPDATE	MS	04.21.23

THE INSTALLATION DETAILS DESCRIBED HEREIN ARE GENERIC AND MAY NOT REFLECT ACTUAL CONDITIONS FOR A SPECIFIC SITE. IF SITE CONDITIONS CAUSE INSTALLATION TO DEVIATE FROM THE REQUIREMENTS DETAILED HEREIN, A LICENSED ENGINEER OR ARCHITECT SHALL PREPARE SITE SPECIFIC DOCUMENTS FOR USE WITH THIS DOCUMENT.

HERMES F. NORERO LICENSE No. 73778 STATE OF FLORIDA PROFESSIONAL ENGINEER
HERMES F. NORERO, P.E.
FLORIDA P.E. No. 73778
BUILDING DROPS, INC.
398 E. DANIA BEACH BLVD. # 338
DANIA BEACH, FL 33004
FBPE CERT. OF AUTHORIZATION No. 29578

FL #: FL12926

DATE: 08.10.17

DWG. BY: RV | CHK. BY: HFN

SCALE: NTS

DWG. #: YKK216

SHEET: 3 OF 10

s:\projects\ykk ap america, inc\cc-23-0226.1 - fbc 2023 (8th edition) commercial code change\dwgs\fl12926\ykk216.dwg

Submitted on 1/26/26 for Building Permit
Added to application by Staff

6/30/2023 10:38 AM

DOOR MULLION LOAD TABLE

DOOR MULLION LOAD CAPACITY			
NOMINAL DIMS.		TYPE 'M3'	TYPE 'M4'
WIDTH (W) INCHES	LENGTH - L INCHES	EXT. (+) INT. (-)	EXT. (+) INT. (-)
30	81.75	84.6	100.0
36		70.5	100.0
42		60.4	97.6
48		52.9	85.4
54		47.0	75.9
30	85.75	76.9	100.0
36		64.1	100.0
42		54.9	88.7
48		48.0	77.6
54		42.7	69.0
30	91.75	67.1	100.0
36		56.0	90.4
42		48.0	77.5
48		42.0	67.8
54		37.3	60.3
30	97.75	59.2	95.6
36		49.3	79.7
42		42.3	68.3
48		37.0	59.7
51.875		34.2	55.3

DOUBLE DOOR

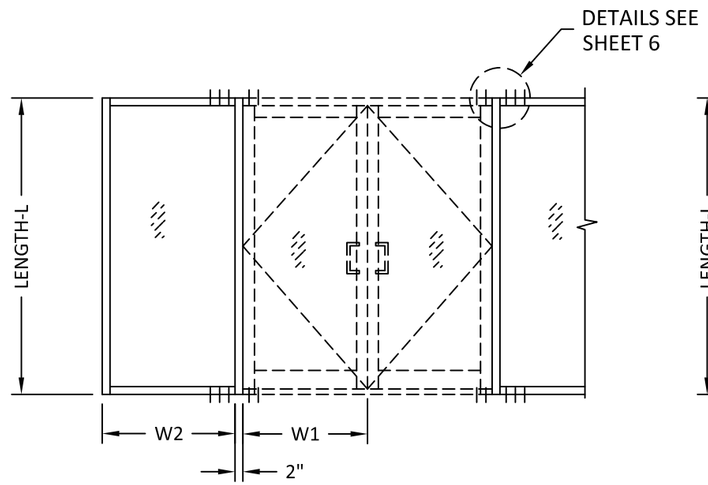

SINGLE DOOR

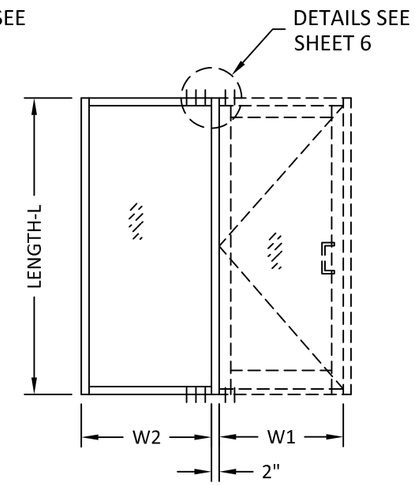

SINGLE DOOR W/ TRANSOM

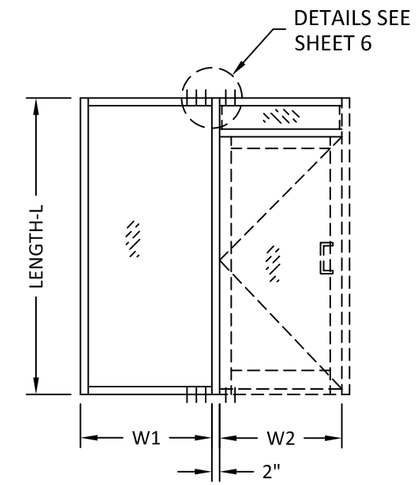

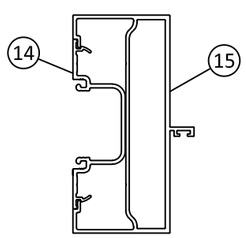

TYPE 'M3'
NO REINFORCING

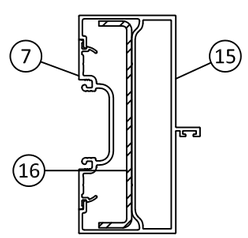

TYPE 'M4'
LIGHT REINFORCING

$$\text{WIDTH (W)} = \frac{W1 + W2}{2} + 2''$$

ELEVATIONS ABOVE SHOW NUMBER OF ANCHORS REQD. AT HEAD/SILL OF DOOR MULLION FOR VARIOUS CONFIGURATIONS. SEE SHEET 6 FOR DETAIL.

YKK AP AMERICA
1229 HWY 441 BYPASS
DUBLIN, GEORGIA 31021
PH: (478)277-1955 FAX: (678)838-6001

TITLE: YES 45 FI ALUMINUM STOREFRONT SYSTEM (NON-HVHZ) (NON-IMPACT)
DOOR MULLION LOAD TABLE

PREPARED BY: BUILDING DROPS, INC.
398 E. DANIA BEACH BLVD., STE. 338
DANIA BEACH, FL 33004
PH: (954)399-8478
FAX: (954)744.4738
WEB: www.buildingdrops.com

REMARKS	BY	DATE
A-VALIDATOR'S COMM.	AR	10.12.17
B-2023 FBC CODE UPDATE	MS	04.21.23

THE INSTALLATION DETAILS DESCRIBED HEREIN ARE GENERIC AND MAY NOT REFLECT ACTUAL CONDITIONS FOR A SPECIFIC SITE. IF SITE CONDITIONS CAUSE INSTALLATION TO DEVIATE FROM THE REQUIREMENTS DETAILED HEREIN, A LICENSED ENGINEER OR ARCHITECT SHALL PREPARE SITE SPECIFIC DOCUMENTS FOR USE WITH THIS DOCUMENT.

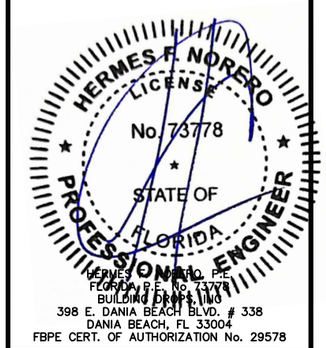

FL #: FL12926

DATE: 08.10.17

DWG. BY: RV | CHK. BY: HFN

SCALE: NTS

DWG. #: YKK216

SHEET: 4 OF 10

s:\projects\ykk ap america, inc\cc-23-0226.1 - fbc 2023 (8th edition) commercial code change\dwgs\fl12926\ykk216.dwg

Submitted on 1/26/26 for Building Permit
Added to application by Staff

6/30/2023 10:38 AM

DOOR MULLION LOAD TABLE

LIGHT REINFORCING

DOOR MULLION LOAD CAPACITY - LIGHT REINFORCING			
NOMINAL DIMS.			LOADS - PSF
WIDTH (W1)	WIDTH (W2) INCHES	FRAME HEIGHT INCHES	EXT. (+) INT. (-)
60	30	102	58.5
	36		54.9
	42		51.6
	48		48.8
	54		46.2
	60		43.9
66	30		54.9
	36		51.6
	42		48.8
	48		46.2
	54		43.9
	60		41.8
72	30		51.6
	36		48.8
	42		46.2
	48		43.9
	54		41.8
	60		39.9
84	30		46.2
	36		43.9
	42		41.8
	48		39.9
60	30	108	52.2
	36		48.9
	42		46.1
	48		43.5
	54		41.2
	60		39.2
66	30		48.9
	36		46.1
	42		43.5
	48		41.2
	54		39.2
	60		37.3
72	30		46.1
	36		43.5
	42		41.2
	48		39.2
	54		37.3
84	30		41.2
	36		39.2
	42		37.3

DOOR MULLION LOAD CAPACITY - LIGHT REINFORCING			
NOMINAL DIMS.			LOADS - PSF
WIDTH (W1)	WIDTH (W2) INCHES	FRAME HEIGHT INCHES	EXT. (+) INT. (-)
60	30	114	46.9
	36		43.9
	42		41.3
	48		39.0
	54		37.0
	60		35.1
66	30		43.9
	36		41.3
	42		39.0
	48		37.0
	54		35.1
72	30		41.3
	36		39.0
	42		37.0
	48		35.1
84	30		37.0
	36		35.1
60	30	120	42.3
	36		39.6
	42		37.3
	48		35.2
	54		33.4
66	30		39.6
	36		37.3
	42		35.2
	48		33.4
72	30		37.3
	36		35.2
	42		33.4
84	30		33.4

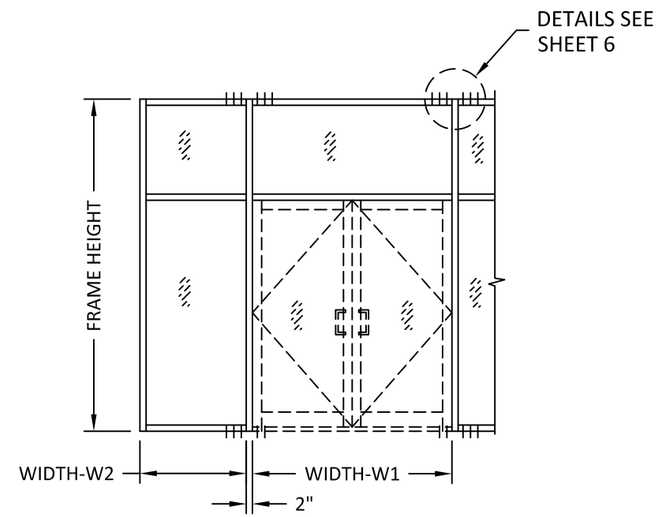

DOUBLE DOOR W/ TRANSOM

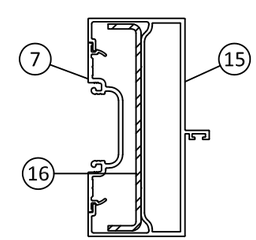

TYPE 'M4'
LIGHT REINFORCING

$$\text{WIDTH (W)} = \frac{W1 + W2}{2} + 2$$

ELEVATION ABOVE SHOWS NUMBER OF ANCHORS REQD. AT HEAD/SILL OF DOOR MULLION FOR VARIOUS CONFIGURATIONS. SEE SHEET 6 FOR DETAIL.

YKK AP AMERICA
1229 HWY 441 BYPASS
DUBLIN, GEORGIA 31021
PH: (478)277-1955 FAX: (678)838-6001

TITLE: YES 45 FI ALUMINUM STOREFRONT SYSTEM (NON-HVHZ) (NON-IMPACT)
DOOR MULLION LOAD TABLE

PREPARED BY: BUILDING DROPS, INC.
398 E. DANIA BEACH BLVD., STE. 338
DANIA BEACH, FL 33004
PH: (954)399-8478
FAX: (954)744.4738
WEB: www.buildingdrops.com

REMARKS	BY	DATE
A-VALIDATOR'S COMM.	AR	10.12.17
B-2023 FBC CODE UPDATE	MS	04.21.23

THE INSTALLATION DETAILS DESCRIBED HEREIN ARE GENERIC AND MAY NOT REFLECT ACTUAL CONDITIONS FOR A SPECIFIC SITE. IF SITE CONDITIONS CAUSE INSTALLATION TO DEVIATE FROM THE REQUIREMENTS DETAILED HEREIN, A LICENSED ENGINEER OR ARCHITECT SHALL PREPARE SITE SPECIFIC DOCUMENTS FOR USE WITH THIS DOCUMENT.

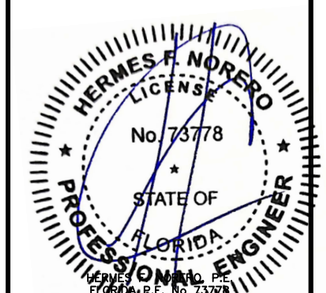

FL #: FL12926

DATE: 08.10.17

DWG. BY: RV | CHK. BY: HFN

SCALE: NTS

DWG. #: YKK216

SHEET: 5 OF 10

s:\projects\ykk ap america, inc\cc-23-0226.1 - fbc 2023 (8th edition) commercial code change\dwgs\fl12926\ykk216.dwg

Submitted on 1/26/26 for Building Permit
Added to application by Staff

ANCHOR LOAD TABLE

ANCHOR LOAD CAPACITY - PSF EXT. (+) & INT. (-)			
NOMINAL DIMS.		ANCHORS	ANCHORS
WIDTH (W)	FRAME HEIGHT	TYPE 'A'	TYPE 'B'
24.0	60.0	90.6	108.0
30.0		72.5	108.0
36.0		60.4	96.1
42.0		51.8	82.4
48.0		45.3	72.1
54.0		40.3	64.1
60.0		36.3	57.7
66.0		33.0	52.4
72.0		30.2	48.1
24.0	66.0	82.4	108.0
30.0		65.9	104.9
36.0		54.9	87.4
42.0		47.1	74.9
48.0		41.2	65.5
54.0		36.6	58.3
60.0		33.0	52.4
66.0		30.0	47.7
72.0		27.5	43.7
24.0	72.0	75.5	108.0
30.0		60.4	96.1
36.0		50.3	80.1
42.0		43.2	68.7
48.0		37.8	60.1
54.0		33.6	53.4
60.0		30.2	48.1
66.0		27.5	43.7
72.0		25.2	40.1
24.0	78.0	69.7	108.0
30.0		55.8	88.7
36.0		46.5	73.9
42.0		39.8	63.4
48.0		34.9	55.5
54.0		31.0	49.3
60.0		27.9	44.4
66.0		25.4	40.3
24.0	84.0	64.7	103.0
30.0		51.8	82.4
36.0		43.2	68.7
42.0		37.0	58.9
48.0		32.4	51.5
54.0		28.8	45.8
60.0		25.9	41.2

ANCHOR LOAD CAPACITY - PSF EXT. (+) & INT. (-)			
NOMINAL DIMS.		ANCHORS	ANCHORS
WIDTH (W)	FRAME HEIGHT	TYPE 'A'	TYPE 'B'
24.0	90.0	60.4	96.1
30.0		48.3	76.9
36.0		40.3	64.1
42.0		34.5	54.9
48.0		30.2	48.1
54.0		26.9	42.7
24.0	96.0	56.6	90.1
30.0		45.3	72.1
36.0		37.8	60.1
42.0		32.4	51.5
48.0		28.3	45.1
54.0		25.2	40.1
24.0	102.0	53.3	84.8
30.0		42.6	67.9
36.0		35.5	56.5
42.0		30.5	48.5
48.0		26.7	42.4
24.0	108.0	50.3	80.1
30.0		40.3	64.1
36.0		33.6	53.4
42.0		28.8	45.8
48.0		25.2	40.1
24.0	114.0	47.7	75.9
30.0		38.2	60.7
36.0		31.8	50.6
42.0		27.3	43.4
24.0	120.0	45.3	72.1
30.0		36.3	57.7
36.0		30.2	48.1
42.0		25.9	41.2

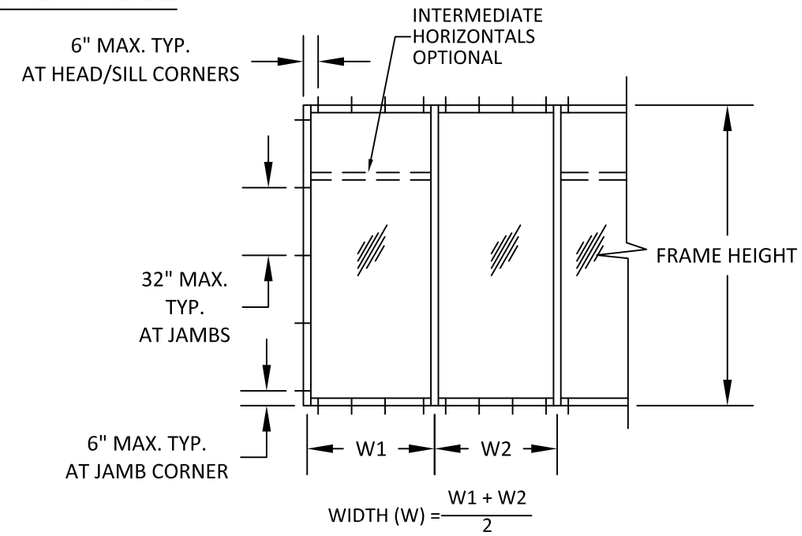

HEAD/SILL ANCHORS SPACING:

OPTION #1 (SHOWN ABOVE):
ANCHORS AT 16" O.C. MAX.

OPTION #2 (SHOWN BELOW):
ONE ANCHOR AT EACH SIDE OF MULLION
(1) INTERMEDIATE ANCHOR REQD. AT HEAD AND SILL
ONLY WHEN SPACING IN BETWEEN MULLIONS EXCEEDS 48 INCHES.

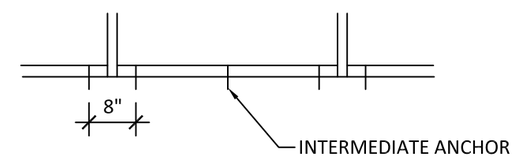

TYPICAL ANCHORS

TYPE A

#14 WOOD SCREW:
INTO 2BY WOOD BUCKS OR WOOD STRUCTURES (MIN. S.G. = 0.55) 1-1/2" MIN. PENETRATION INTO WOOD

1/4" DIA. TAPCON BY ITW' (Fu= 125 KSI, Fy= 100 KSI)
1/4" DIA. ULTRACON+ BY DEWALT' (Fu= 177 KSI, Fy= 155 KSI)
THRU 1BY BUCKS INTO CONC. OR MASONRY
1-1/4" MIN. EMBED INTO CONC. OR MASONRY
DIRECTLY INTO CONC. OR MASONRY
1-3/4" MIN. EMBED INTO CONC. OR MASONRY

TYPE B

1/4" DIA. TEKS OR SELF DRILLING SCREWS (GRADE 5 CRS)
INTO FBC APPROVED MULLIONS (MIN. THK = .090")
(NO SHIM SPACE)
INTO METAL STRUCTURES
STEEL : 18 GA.(.048) MIN. (Fy = 33 KSI MIN.)
ALUMINUM : 1/8: THK. MIN. (6063-T5 MIN.)
STEEL IN CONTACT WITH ALUMINUM TO BE PLATED OR PAINTED)

ANCHOR EDGE DISTANCE
INTO CONCRETE AND MASONRY = 2-1/2" MIN.
INTO WOOD STRUCTURE = 3/4" MIN.
INTO METAL STRUCTURE = 3/4" MIN.

CONCRETE AT HEAD, SILL OR JAMB f'c = 3000 PSI MIN.
C-90 HOLLOW/FILLED BLOCK AT JAMBS f'm = 2000 PSI MIN.

SEALANTS:
ALL FRAME CORNERS SEALED WITH JOINT SEALANT

YKK AP AMERICA
1229 HWY 441 BYPASS
DUBLIN, GEORGIA 31021
PH: (478)277-1955 FAX: (678)838-6001

TITLE: YES 45 FI ALUMINUM STOREFRONT SYSTEM (NON-HVHZ) (NON-IMPACT)
ANCHOR LOAD TABLE & ANCHOR LAYOUT

PREPARED BY: BUILDING DROPS, INC.
398 E. DANIA BEACH BLVD., STE. 338
DANIA BEACH, FL 33004
PH: (954)399-8478
FAX: (954)744.4738
WEB: www.buildingdrops.com

REMARKS	BY	DATE
A-VALIDATOR'S COMM.	AR	10.12.17
B-2023 FBC CODE UPDATE	MS	04.21.23

THE INSTALLATION DETAILS DESCRIBED HEREIN ARE GENERIC AND MAY NOT REFLECT ACTUAL CONDITIONS FOR A SPECIFIC SITE. IF SITE CONDITIONS CAUSE INSTALLATION TO DEVIATE FROM THE REQUIREMENTS DETAILED HEREIN, A LICENSED ENGINEER OR ARCHITECT SHALL PREPARE SITE SPECIFIC DOCUMENTS FOR USE WITH THIS DOCUMENT.

HERMES F. NORERO LICENSE No. 73778 STATE OF FLORIDA PROFESSIONAL ENGINEER
HERMES F. NORERO, P.E.
FLORIDA P.E. No. 73778
BUILDING DROPS, INC
398 E. DANIA BEACH BLVD. # 338
DANIA BEACH, FL 33004
FBPE CERT. OF AUTHORIZATION No. 29578

FL #: FL12926
DATE: 08.10.17
DWG. BY: RV
CHK. BY: HFN
SCALE: NTS
DWG. #: YKK216
SHEET: 6 OF 10

6/30/2023 10:38 AM
s:\projects\ykk ap america, inc\cc-23-0226.1 - fbc 2023 (8th edition) commercial code change\dwgs\fl12926\ykk216.dwg

Submitted on 1/26/26 for Building Permit
Added to application by Staff

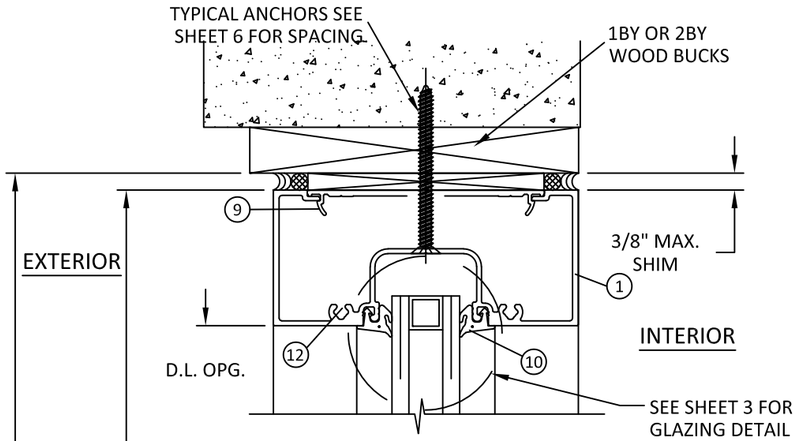

A/7 VERTICAL SECTION
HEAD

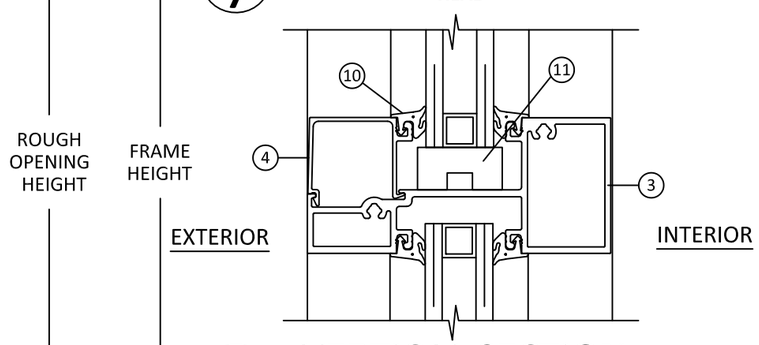

B/7 VERTICAL SECTION
HORIZONTAL INTERMEDIATE

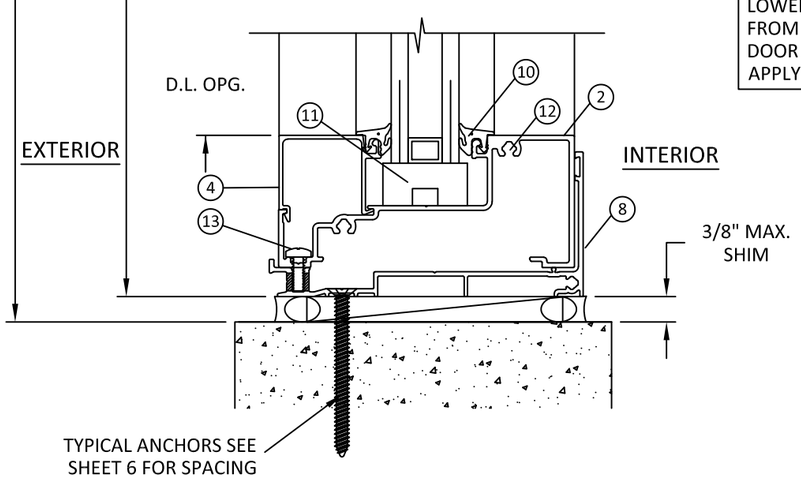

C/7 VERTICAL SECTION
SILL

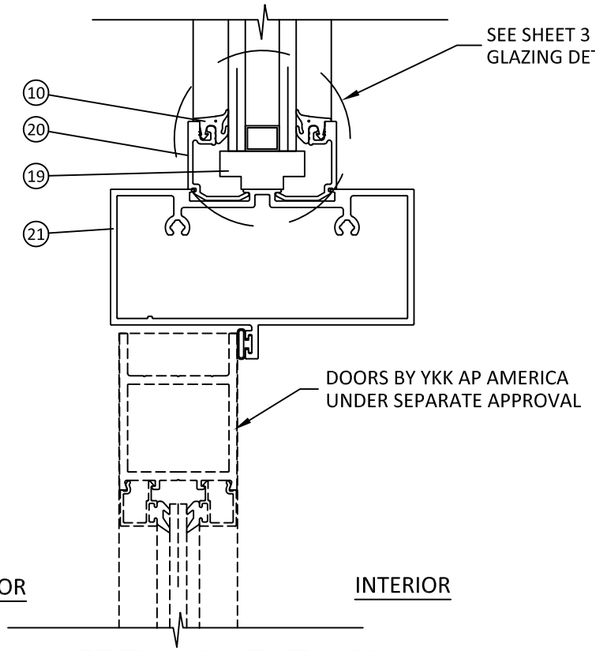

N/7 VERTICAL SECTION
DOOR HEAD W/ TRANSOM

MULLION CONNECTION TO DOOR SILL
SEE SEPARATE YKK AP AMERICA DOOR APPROVAL FOR COMPONENT SIZES, INSTALLATION DETAILS AND DESIGN LOAD RATING. LOWER DESIGN PRESSURE FROM STOREFRONT OR DOOR APPROVAL WILL APPLY TO ENTIRE SYSTEM.

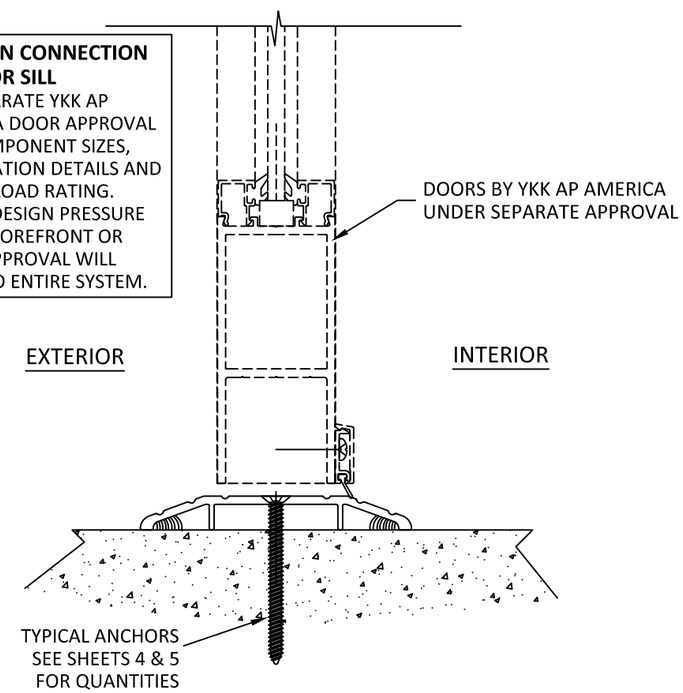

D/7 VERTICAL SECTION
DOOR SILL

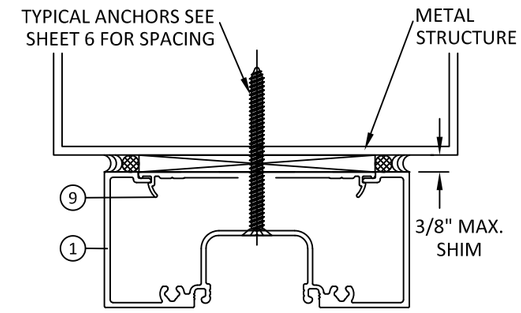

A1/7 VERTICAL SECTION
HEAD

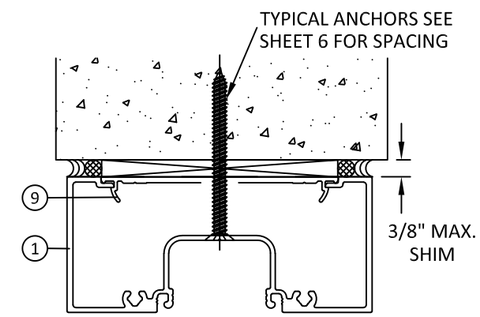

A2/7 VERTICAL SECTION
HEAD

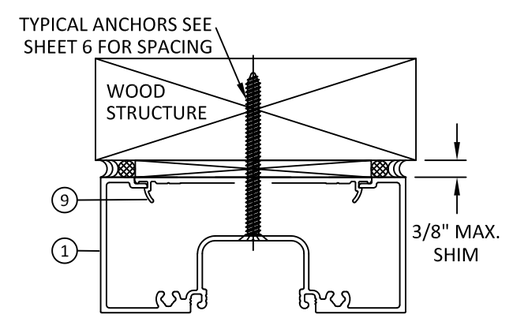

A3/7 VERTICAL SECTION
HEAD

YKK AP AMERICA
1229 HWY 441 BYPASS
DUBLIN, GEORGIA 31021
PH: (478)277-1955 FAX: (678)838-6001

TITLE: YES 45 FI ALUMINUM STOREFRONT SYSTEM (NON-HVHZ) (NON-IMPACT)
VERTICAL SECTIONS

PREPARED BY: BUILDING DROPS, INC.
398 E. DANIA BEACH BLVD., STE. 338
DANIA BEACH, FL 33004
PH: (954)399-8478
FAX: (954)744.4738
WEB: www.buildingdrops.com

REMARKS	BY	DATE
A-VALIDATOR'S COMM.	AR	10.12.17
B-2023 FBC CODE UPDATE	MS	04.21.23

THE INSTALLATION DETAILS DESCRIBED HEREIN ARE GENERIC AND MAY NOT REFLECT ACTUAL CONDITIONS FOR A SPECIFIC SITE. IF SITE CONDITIONS CAUSE INSTALLATION TO DEVIATE FROM THE REQUIREMENTS DETAILED HEREIN, A LICENSED ENGINEER OR ARCHITECT SHALL PREPARE SITE SPECIFIC DOCUMENTS FOR USE WITH THIS DOCUMENT.

HERMES F. NORERO LICENSE No. 73778 STATE OF FLORIDA PROFESSIONAL ENGINEER
HERMES F. NORERO, P.E.
FLORIDA P.E. No. 73778
BUILDING DROPS, INC
398 E. DANIA BEACH BLVD. # 338
DANIA BEACH, FL 33004
FBPE CERT. OF AUTHORIZATION No. 29578

FL #: FL12926
DATE: 08.10.17
DWG. BY: RV
CHK. BY: HFN
SCALE: NTS
DWG. #: YKK216
SHEET: 7 OF 10

6/30/2023 10:38 AM
s:\projects\ykk ap america, inc\cc-23-0226.1 - fbc 2023 (8th edition) commercial code change\dwgs\fl12926\ykk216.dwg

Submitted on 1/26/26 for Building Permit
Added to application by Staff

6/30/2023 10:39 AM

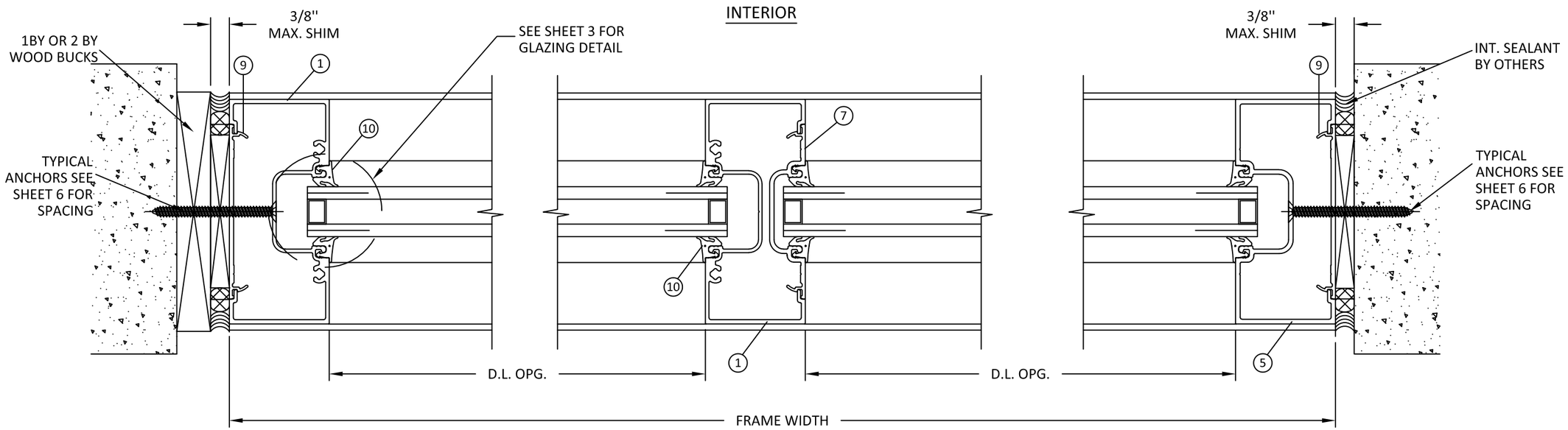

E/8 **HORIZONTAL SECTION**
JAMB

F/8 **HORIZONTAL SECTION**
INTERMEDIATE

G/8 **HORIZONTAL SECTION**
JAMB

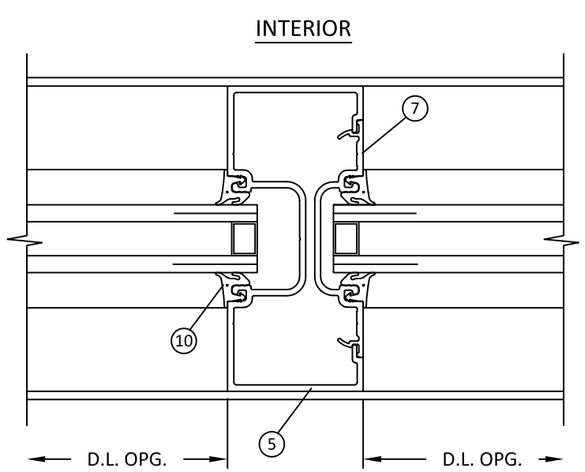

F1/8 **HORIZONTAL SECTION**
INTERMEDIATE

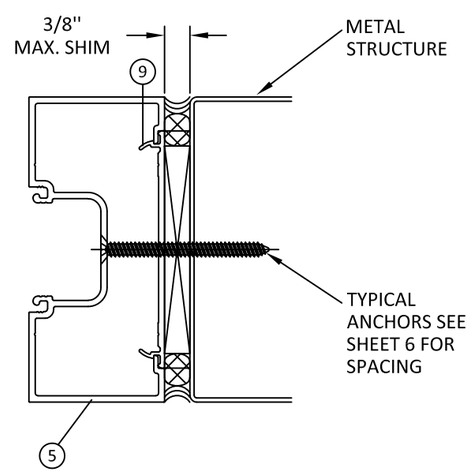

H/8 **HORIZONTAL SECTION**
JAMB

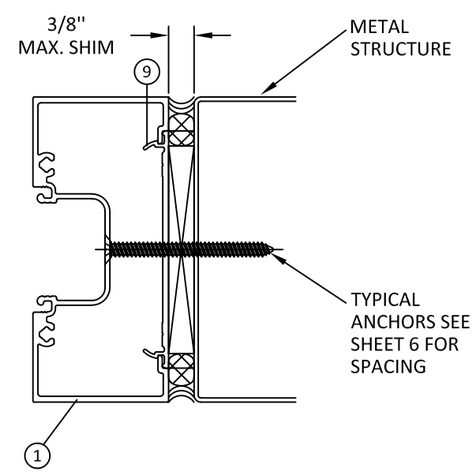

I/8 **HORIZONTAL SECTION**
JAMB/MULLION

YKK AP AMERICA
1229 HWY 441 BYPASS
DUBLIN, GEORGIA 31021
PH: (478)277-1955 FAX: (678)838-6001

TITLE: YES 45 FI ALUMINUM STOREFRONT SYSTEM (NON-HVHZ) (NON-IMPACT)
HORIZONTAL SECTIONS

PREPARED BY:
BUILDING DROPS, INC.
398 E. DANIA BEACH BLVD., STE. 338
DANIA BEACH, FL 33004
PH: (954)399-8478
FAX: (954)744.4738
WEB: www.buildingdrops.com

REMARKS	BY	DATE
A-VALIDATOR'S COMM.	AR	10.12.17
B-2023 FBC CODE UPDATE	MS	04.21.23

THE INSTALLATION DETAILS DESCRIBED HEREIN ARE GENERIC AND MAY NOT REFLECT ACTUAL CONDITIONS FOR A SPECIFIC SITE. IF SITE CONDITIONS CAUSE INSTALLATION TO DEVIATE FROM THE REQUIREMENTS DETAILED HEREIN, A LICENSED ENGINEER OR ARCHITECT SHALL PREPARE SITE SPECIFIC DOCUMENTS FOR USE WITH THIS DOCUMENT.

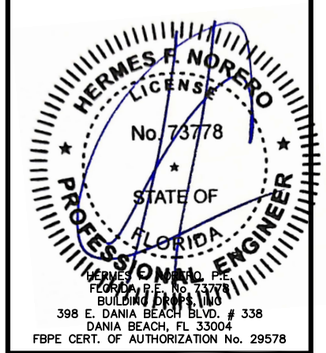

FL #: FL12926

DATE: 08.10.17

DWG. BY: RV | CHK. BY: HFN

SCALE: NTS

DWG. #: YKK216

SHEET: 8 OF 10

s:\projects\ykk ap america, inc\cc-23-0226.1 - fbc 2023 (8th edition) commercial code change\dwgs\fl12926\ykk216.dwg

Submitted on 1/26/26 for Building Permit
Added to application by Staff

6/30/2023 10:39 AM

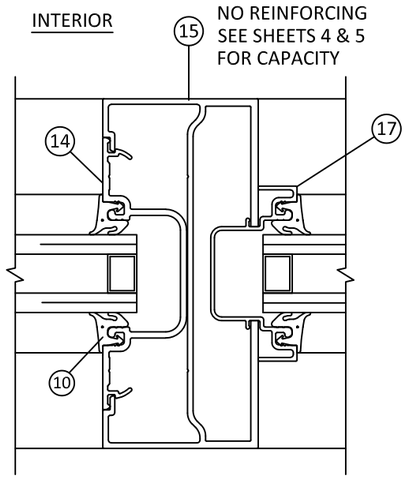

J/9 HORIZONTAL SECTION

VERTICAL INTERMEDIATE
NO REINFORCEMENT

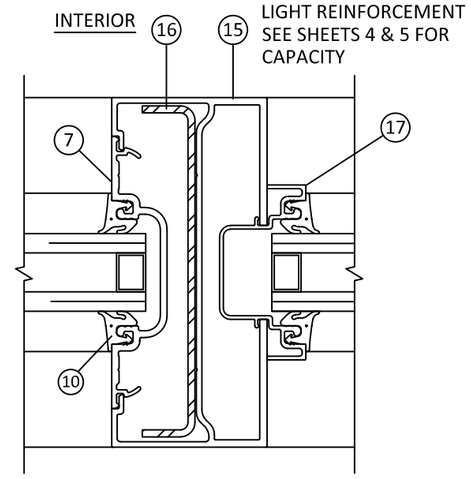

K/9 HORIZONTAL SECTION

VERTICAL INTERMEDIATE
LIGHT REINFORCEMENT

NOTE: WHERE REINFORCEMENT (ITEM #16) IS USED ADJACENT TO DOOR OPENING, USE SHALLOW POCKET FILLER (ITEM #7). AT OPPOSITE SIDE OF DLO, USE OF THE DEEP POCKET FILLER (ITEM #14) OR MULLION (ITEM #1 OR 5) IS REQUIRED.

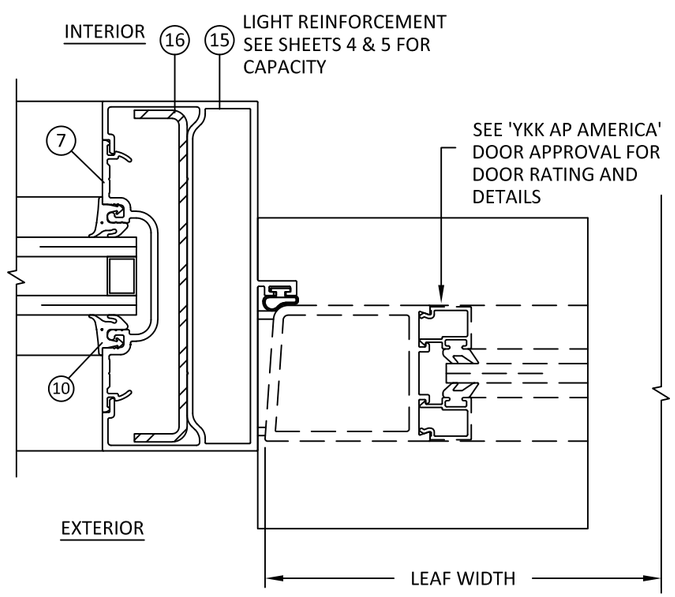

L/9 HORIZONTAL SECTION

VERTICAL INTERMEDIATE
LIGHT REINFORCEMENT

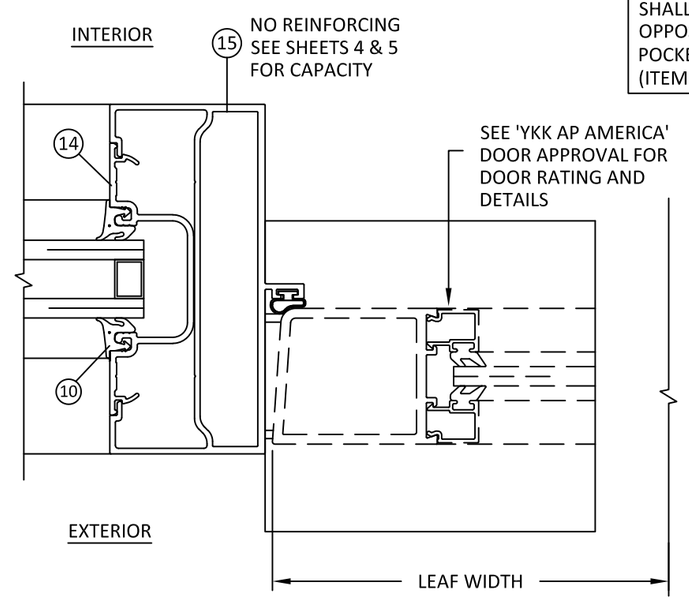

M/9 HORIZONTAL SECTION

VERTICAL INTERMEDIATE
NO REINFORCEMENT

YKK AP AMERICA
1229 HWY 441 BYPASS
DUBLIN, GEORGIA 31021
PH: (478)277-1955 FAX: (678)838-6001

TITLE: YES 45 FI ALUMINUM STOREFRONT SYSTEM (NON-HVHZ) (NON-IMPACT)
HORIZONTAL SECTIONS

PREPARED BY: BUILDING DROPS, INC.
398 E. DANIA BEACH BLVD., STE. 338
DANIA BEACH, FL 33004
PH: (954)399-8478
FAX: (954)744.4738
WEB: www.buildingdrops.com

REMARKS	BY	DATE
A-VALIDATOR'S COMM.	AR	10.12.17
B-2023 FBC CODE UPDATE	MS	04.21.23

THE INSTALLATION DETAILS DESCRIBED HEREIN ARE GENERIC AND MAY NOT REFLECT ACTUAL CONDITIONS FOR A SPECIFIC SITE. IF SITE CONDITIONS CAUSE INSTALLATION TO DEVIATE FROM THE REQUIREMENTS DETAILED HEREIN, A LICENSED ENGINEER OR ARCHITECT SHALL PREPARE SITE SPECIFIC DOCUMENTS FOR USE WITH THIS DOCUMENT.

HERMES F. NORERO LICENSE No. 73778 STATE OF FLORIDA PROFESSIONAL ENGINEER

HERMES F. NORERO, P.E.
FLORIDA P.E. No. 73778
BUILDING DROPS, INC
398 E. DANIA BEACH BLVD. # 338
DANIA BEACH, FL 33004
FBPE CERT. OF AUTHORIZATION No. 29578

FL #: FL12926

DATE: 08.10.17

DWG. BY: RV | CHK. BY: HFN

SCALE: NTS

DWG. #: YKK216

SHEET: 9 OF 10

s:\projects\ykk ap america, inc\cc-23-0226.1 - fbc 2023 (8th edition) commercial code change\dwgs\fl12926\ykk216.dwg

Submitted on 1/26/26 for Building Permit
Added to application by Staff

6/30/2023 10:39 AM

BILL OF MATERIALS

ITEM	PART No.	DESCRIPTION	MATERIAL	MANUF./SUPPLIER/REMARKS
1	E9-1013	HEAD/JAMB/ VERTICAL	6063-T5	YKK AP AMERICA
2	E9-1089	SILL HORIZONTAL	6063-T5	YKK AP AMERICA
3	E9-1016	HORIZONTAL	6063-T5	YKK AP AMERICA
4	E9-1015	GLASS STOP	6063-T5	YKK AP AMERICA
5	E9-1011	JAMB VERTICAL	6063-T5	YKK AP AMERICA
7	E9-1012	SHALLOW POCKET FILLER	6063-T5	YKK AP AMERICA
8	E9-1068	SILL FLASHING	6063-T5	YKK AP AMERICA
9	E1-1054	FLAT FILLER	6063-T5	YKK AP AMERICA
10	E2-0052	GLAZING GASKET	EPDM	YKK AP AMERICA
11	E2-0020	SETTING BLOCK	EPDM	-
12	PM-1220-SS	# 12 x 1-1/4" PHMS	ZINC PLATED STEEL	-
13	PM-1008-SS	# 10 x 1/2" PHMS	STAINLESS STEEL	-
14	E9-1019	DEEP POCKET FILLER	6063-T5	YKK AP AMERICA
15	E9-0411	DOOR JAMB	6063-T5	YKK AP AMERICA
16	E1-0194	REINFORCING CHANNEL (Fy=38 KSI)	STEEL	.679 X 4.269 X .679 X .104"
17	E9-0435	TRANSOM GLAZING POCKET	6063-T5	YKK AP AMERICA
18	E2-0051	AIRTIGHT GASKET	SANTOPRENE	-
19	E2-0056	SETTING BLOCK	EPDM	-
20	E9-0413	TRANSOM GLAZING STOP	6063-T5	YKK AP AMERICA
21	E9-0412	SINGLE ACTING TRANSOM BAR	6063-T5	YKK AP AMERICA

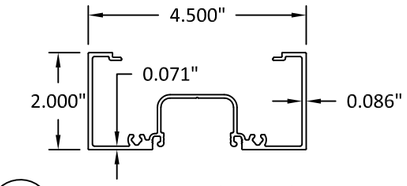

1 FRAME HEAD/ JAMB/ VERTICAL

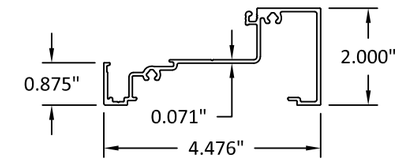

2 SILL

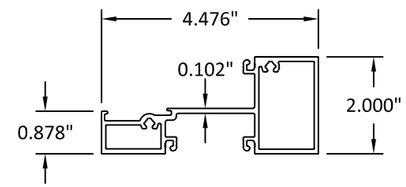

3 HORIZONTAL

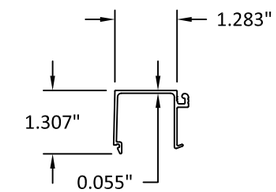

4 GLASS STOP

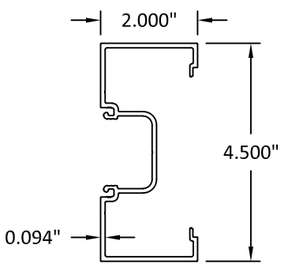

5 JAMB/ VERTICAL

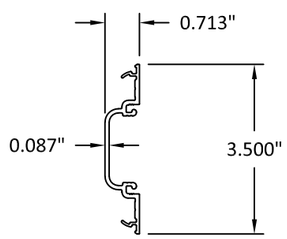

7 SHALLOW POCKET FILLER

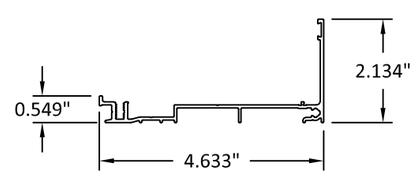

8 SILL FLASHING

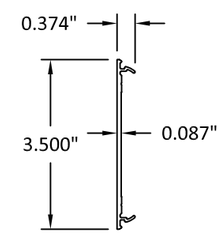

9 FLAT FILLER

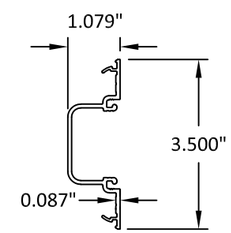

14 DEEP POCKET FILLER

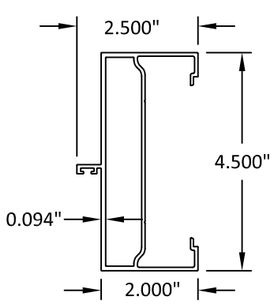

15 DOOR JAMB

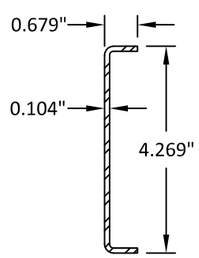

16 DOOR MULLION REINFORCING CHANNEL

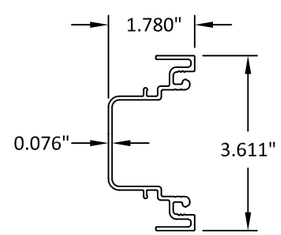

17 TRANSOM GLAZING POCKET

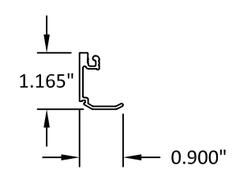

20 TRANSOM GLAZING STOP

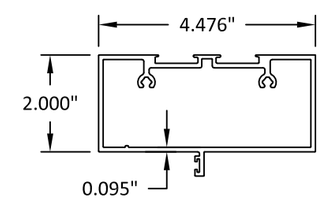

21 SINGLE ACTING TRANSOM BAR

YKK AP AMERICA
1229 HWY 441 BYPASS
DUBLIN, GEORGIA 31021
PH: (478)277-1955 FAX: (678)838-6001

TITLE: YES 45 FI ALUMINUM STOREFRONT SYSTEM (NON-HVHZ) (NON-IMPACT)
COMPONENTS & BILL OF MATERIALS

PREPARED BY: BUILDING DROPS, INC.
398 E. DANIA BEACH BLVD., STE. 338
DANIA BEACH, FL 33004
PH: (954)399-8478
FAX: (954)744.4738
WEB: www.buildingdrops.com

REMARKS	BY	DATE
A-VALIDATOR'S COMM.	AR	10.12.17
B-2023 FBC CODE UPDATE	MS	04.21.23

THE INSTALLATION DETAILS DESCRIBED HEREIN ARE GENERIC AND MAY NOT REFLECT ACTUAL CONDITIONS FOR A SPECIFIC SITE. IF SITE CONDITIONS CAUSE INSTALLATION TO DEVIATE FROM THE REQUIREMENTS DETAILED HEREIN, A LICENSED ENGINEER OR ARCHITECT SHALL PREPARE SITE SPECIFIC DOCUMENTS FOR USE WITH THIS DOCUMENT.

HERMES F. NORERO LICENSE No. 73778 STATE OF FLORIDA PROFESSIONAL ENGINEER
HERMES F. NORERO, P.E.
FLORIDA P.E. No. 73778
BUILDING DROPS, INC.
398 E. DANIA BEACH BLVD. # 338
DANIA BEACH, FL 33004
FBPE CERT. OF AUTHORIZATION No. 29578

FL #: FL12926

DATE: 08.10.17

DWG. BY: RV | CHK. BY: HFN

SCALE: NTS

DWG. #: YKK216

SHEET: 10 OF 10

s:\projects\ykk ap america, inc\cc-23-0226.1 - fbc 2023 (8th edition) commercial code change\dwgs\fl12926\ykk216.dwg

CITY OF ST. AUGUSTINE HISTORIC ARCHITECTURAL REVIEW BOARD

STAFF REPORT AND RECOMMENDATION

Prepared for March 19, 2026 Meeting

Application HP2026-0010 Address: 17 Salt Run Court

Cabe Nolan – Applicant and Owner

Project description: To demolish three (3) residential buildings, constructed c.1936, that are recorded in the Florida Master Site File and not located in a district.

Architectural Style:	Minimal Traditional	Florida Master Site File:	SJ06322
National Register:	N/A	Construction date:	c. 1936
Archaeology Zone:	N/A	Zoning District:	RG-1
Parcel number:	1578500000		
Agenda Item:	7(a)	Previous Action(s):	N/A

STAFF SUMMARY AND ANALYSIS:

This long, irregular parcel with three residential structures currently addressed 17, 21, and 23 Salt Run Court is located the northeast corner of Salt Run Court and Ocean Way on Anastasia Island. The property addresses and street names have changed over time. Until 1996, Salt Run Court was named Matanzas Avenue. According to the St. Johns County Property Appraiser, all three structures were built c. 1936; however, Sanborn Fire insurance map updated place the two cottages (21 and 23) as being built between 1955 and 1965 based upon comparisons between the 1955 update to the 1930 Sanborn Map and the 1965 update. Once all three structures were on the property, they were addressed from Ocean Way as 14, 16-1/2, and 16 respectively. Polk City Directory research notes the cottages a being 16a and 16b by the mid-1980s.

The primary structure, 17 Salt Run Court, has seen several alterations over time. The Sanborn Maps indicate a garage apartment structure with a masonry ground floor garage space and wood frame residence above. Permitting records show the building underwent large renovations between 1986 and 1994 which converted the ground floor garage into living space and later added a ground floor great room, entryway, and 1-car garage. The building now features an asphalt shingle side gable roof with a lower shed roof over the first floor on the front elevation and 1-story front gabled entry porch and garage. The upper story cladding appears to be aluminum or vinyl siding with a shell-dash finish below. Windows are primarily 1/1 vinyl and aluminum replacements.

The cottages addressed 21 and 23 Salt Run Court appear to retain much of their historic integrity. Their asphalt shingle roofs are irregular in pattern with board and batten accents in the offset front gables and gabled entry stoop roofs. The exterior cladding for both cottages is a smooth, painted stucco with solid concrete block foundations. Windows are primarily 6/6 sash windows, though one side elevation of each building also features 2/2 wood windows with horizontal muntins.

The applicant is seeking approval for demolition of all three structures; however, the applicant has expressed intent to rehabilitate, rather than demolish, the two cottages unless they are structurally unable to remain.

Detailed analysis and additional comments can be found in the staff responses to the Demolition Review Criteria on page 3 of this staff report. Any full demolition of a structure aged 50 years or older requires review and approval by the HARB.

STAFF RECOMMENDATION:

Based on a review of the AGHP and without the support of evidence to the contrary, staff finds that the board can **APPROVE** a **Certificate of Demolition** at **17 Salt Run Court** because the structures proposed for demolition are not local landmarks or otherwise designated as a historic buildings with the following condition:

1. If demolition of the cottages is pursued, applicant must make a good-faith effort to salvage useable materials including windows, doors, structural wood, and interior wood paneling and flooring per seciton 28-89(6).

Candice Seymour

Candice Seymour, Historic Preservation Planner

SUMMARY SCOPE OF WORK:

1. Demolition of three residential buildings

DEMOLITION REVIEW CRITERIA (AGHP):

1. Whether or not the structure is within or is immediately facing a locally designated historic preservation zoning district. N/A

2. The contribution of the structure to the mass and scale of the streetscape. The primary two-story structure is set back from the street, though it is larger in mass and scale than the immediately adjacent cottages. The cottages are similar in mass and scale to several others along Ocean Way.

3. The impact of the loss of the structure on the streetscape. The primary building does not have a unique typology for the area and has undergone such extensive alteration that it's original appearance as a garage apartment is unclear. While the cottages also do not have a unique typology for the area, they appear to retain much of their historic appearance and are more compatible with nearby structures that were likely built around the same time.

4. Whether or not the structure will be replaced and the impact of a replacement structure, or lack thereof, on the streetscape. The applicant proposes to replace the primary residence with a new residence. It is their intent to rehabilitate the cottages; however, if rehabilitation is determined to be infeasible, he is proposing to replicate both cottages on the same building footprints. A site plan was provided showing the proposed building footprint for the new primary residence. No design requirements are in place for this area; however, it is encouraged not to replicate historic styles and to use inspiration of the immediate context area to design a compatible building with respect to height, mass, scale, rhythms, materials, site plans, etc. Any redevelopment plans must consider the Tree and Landscape Ordinance and meet zoning requirements.

5. The historical or cultural merit of the structure. Only the primary building is recorded on the Florida Master Site File, though the cottages are mentioned in the survey form. The property is not located in a district. No historic or cultural associations are known with the property that would qualify any or all of the structures for listing individually although the cottages could contribute to a district if one were created. Polk City Directory research first lists the property as an unaddressed residence on Matanzas Avenue in 1955 inhabited by Theodore Sikes, a Field Manager at Sinclair Refining, and his wife Pauline. Other residents include a city firefighter, an employee of Fairchilds, an employee of Florida East Coast Railway, and an employee of Scarlette O'Hara's. There are several instances (1965, 1970, 1975, and 1985) where one or all of the addresses are listed as housing transients or being vacant.

6. The impact of the loss of the structure on the historical or cultural integrity of the city, district and neighborhood. The building is not designated as historic and is not eligible for individual designation, according to the Florida Master Site File. Although the primary structure has been altered significantly altered, the two cottages could contribute to a district if one were extant.

7. Whether or not the structure is representative of a style or type of architecture or a method of construction.
17 Salt Run Court is an example of a Garage Apartment that has been heavily altered over time. The cottages are representative of the Minimal Traditional style.

8. ***Whether or not the structure is one of the last surviving examples of its style or type of architecture or a method of construction.*** The building typologies are commonly found in St. Augustine, primarily on Anastasia Island, though converted garage apartments can also be found in other St. Augustine neighborhoods.

9. ***Whether or not the structure is of such design, craftsmanship or materials that it either could not be reproduced, or could be reproduced only with great difficulty or expense. The condition of the structure, and the possibility of rehabilitating or relocating the structure.*** The concrete block structures do not have a unique architectural style or characteristics that would be difficult to reproduce but new construction will be significantly different in appearance. On the cottages, staff observed several interior and exterior materials that could be salvaged if rehabilitation and/or demolition require their removal including the wood windows and interior ceiling planks.

10. ***The justification for the proposed demolition.*** The owner/applicant seeks to redevelop the property with a new single-family home to replace the primary structure on the lot. They intend to rehabilitate the cottages, but are asking for demolition approval just in case they unable to be retained. Staff did not observe any outwardly visible signs of deterioration on the cottages during their site visit. If demolition of the cottages is necessary, the applicant intends to reconstruct the cottages on the same building footprints.

APPLICATION REQUIREMENTS, ELIGIBILITY FOR DEMOLITION REVIEW, CONDITIONS FOR DEMOLITION APPROVAL:

Eligibility for Demolition Review (Section 28-87(3), CoSA Code of Ordinances)

The review of all applications for demolition or partial demolition permits for historic or regulated structures. Also, review all applications for demolition or partial demolition permits for primary structures within historic preservation zoning districts and National Register districts for potential designation as an historic landmark, and review of partial demolition permits for regulated structures not eligible for administrative approval. Privately owned single-family residential structures that qualify for complete demolition by statute and are not otherwise exempt pursuant to F.S. ch. 553.79(25), will be processed consistent with state law.

National Register Status (Section 28-89(7), CoSA Code of Ordinances)

Applications for certificate of demolition of a building or structure that is of exceptional significance including a local historic landmark, has been a contributing property to a National Register of Historic Places District or has been individually listed on the National Register of Historic Places shall require the following with the burden of proof to be on the applicant. The board may also require the following of structures considered to be contributing to the historical character of the city: 1) requiring submittal of a condition assessment report performed by a qualified professional; 2) requiring the applicant to prove "undue economic hardship" to justify demolition; and 3) allowing HARB the option to deny the demolition request if an undue economic hardship is not proven and removal of the building or structure will be detrimental to the historic and architectural character of the city.

Local Landmark Designation (Section 28-87(3) & (10), CoSA Code of Ordinances)

HARB is assigned the authority of reviewing all applications for demolition or partial demolition permits for historic or regulated structures. Also, review all applications for demolition or partial demolition permits for primary structures within historic preservation zoning districts and National Register districts for potential designation as an historic landmark"… for potential designation as an historical landmark. "Local historic landmarks" are defined as a building, object, site or structure of the highest historical, architectural, cultural or archaeological importance and whose demolition, removal, relocation, or alteration would constitute an irreplaceable loss to the character and quality of the city.

Conditions for Demolition Approval (Section 28-89(6), CoSA Code of Ordinances)

HARB has the discretion in its review of an application for Certificate of Demolition to require, as conditions for approval, one or more of the following:

- Architectural Salvage **-** *As a condition of issuing a certificate of demolition, the board may require, at the applicant's expense, salvage and preservation of significant building materials, architectural details and ornaments, fixtures, and the like for reuse in restoration of other historic properties.*
- Archival Documentation - *The board may also require at the applicant's expense the recording of the structure for archival purposes prior to demolition. The recording may include, but shall not be limited to, photographs and measured drawings.*

~~~~~~~~~~~~~~~~~

The buildings were built by1960 and are thus more than 50 years old. The buildings are not in a Historic Preservation Zoning District or National Register Historic District, or individually listed on the National Register of Historic Places but the primary structure is recorded in the Florida Master Site File.

The requirements for review have been sufficiently met.
~~~~~~~~~~~~~~~~~

Additional References for Demolition Review From City Code:

Sec 28-89(3) (as revised in 2024): In the case of the proposed demolition of an existing historic structure, or a project that constitutes partial demolition of a historic structure that the removal of such structure or architectural features will not be detrimental to the historic and architectural character of the city or that, balancing the interest of the city in preserving the integrity of the city and interest of the owner of the property.

a. Approval of the plans for demolition in the latter event the board may issue an order postponing demolition for a period of not to exceed twelve (12) months after which the owner must reapply. The board may issue a second postponement with the total postponement period not to exceed two (2) twelve-month periods. If the board concludes that the demolition should be postponed, it shall, before issuing any final order with respect to such postponement, afford the applicant an opportunity to appear before the board to offer any evidence they may desire to present concerning the proposed order. Within the period of postponement, the board shall ascertain what the city or other agency or organization may do to preserve such structure and shall make recommendations to that effect to the city commission or otherwise cause the structure to be preserved. This section shall not apply to any permit for demolition which has been applied for, in proper form, prior to the effective date of this section.
b. If the building or structure is of exceptional significance including a local historic landmark, is a contributing property to a National Register of Historic Places District or has been individually listed on the National Register of Historic Places, the board can deny the demolition if the board finds the removal of such building or structure will be detrimental to the historic and architectural character of the city and the applicant has not proven the denial will cause an undue economic hardship.

Sec 28-87(10) under (HARB) Responsibilities:
Designate historic landmarks. As utilized herein the term "local historic landmark" shall mean a building, object, site, or structure of the highest historical, architectural, *cultural, or archaeological importance and whose demolition, removal, relocation, or alteration would constitute an irreplaceable loss to the character and quality of the city. In the event the historic architectural review board desires not to issue a demolition or partial demolition permit for a structure that it finds could meet the criteria for a historic landmark*, the historic architectural review board shall initiate proceedings for designation of the structure as a historic landmark. *In the designation of a historic landmark,* the historic architectural review board shall evaluate the subject property using criteria and standards established by the National Register of Historical Places for national landmarks, or if evaluating the structure as a potential local historic landmark substituting the importance of the resource to the city and state rather than the nation as a whole. No property shall be designated as a historic landmark without first providing the owner of the proposed historic landmark with notice and an opportunity to be heard in the same manner as that provided for a rezoning of property. In addition, consistent with F.S. ch. 553.79(25), a local landmark designation for a privately owned single-family residential structure that qualifies for complete demolition by statute must include the consent of its owner. Any determination of the historic architectural review board shall be subject to appeal by any affected person to the city commission without any fee being charged or levied.

UNREASONABLE OR UNDUE ECONOMIC HARDSHIP:
Defined as an onerous and excessive financial burden that would be placed upon a property owner by the denial of a certificate of demolition or a similar burden which would be placed on a property owner by conditions which the Commission seeks to place on the granting of a certificate. (Section 28-2 CoSA Code of Ordinances)
Is applicant entitled to a Certificate of Demolition independent of any hardship? ☑ Yes ☐ No
Did applicant submit evidence of undue economic hardship? ☐ Yes ☑ No

In any instance where an undue economic hardship, as defined in this chapter, is claimed by a property owner, the property owner may submit to the board any or all of the following information before the board makes a decision on the application for certificate of demolition: (Section 28-89(7)b, CoSA Code of Ordinances)

(Materials submitted by applicant noted with a checked box)

- ☐ 1. An estimate of the cost of the proposed construction, alteration, demolition, or removal;
- ☐ 2. The estimated market value of the property in its current condition; after completion of the proposed construction, alteration, demolition, or removal; and, in the case of a proposed demolition, after renovation of the existing property for continued use;
- ☐ 3. In the case of a proposed demolition, an estimate from an architect, developer, licensed contractor, real estate consultant, appraiser, or other real estate professional experienced in rehabilitation as to the economic feasibility of rehabilitation or reuse of the existing structure on the property;
- ☐ 4. The annual gross income from the property for the previous two (2) years; itemized operating and maintenance expenses for the previous two (2) years; and depreciation deduction and annual cash flow before and after debt service, if any, during the same period;
- ☐ 5. The remaining balance on any mortgage or other financing secured by the property and annual debt service, if any, for the previous two (2) years;
- ☐ 6. All appraisals obtained within the previous two (2) years by the owner or applicant in connection with the purchase, financing, or ownership of the property;
- ☐ 7. Any listing of the property for sale or rent, price asked, and offers received, if any, within the previous two (2) years;
- ☐ 8. The assessed value of the property according to the two (2) most recent assessments;
- ☐ 9. The real estate taxes for the previous two (2) years;
- ☐ 10. The form of ownership or operation of the property, whether an individual, sole proprietorship, for profit or not-for-profit corporation, limited partnership, joint venture, or other;

Any other information considered necessary by the board to a determination as to whether the property does yield or may yield a reasonable return to the property owner. The board may require that the property owner furnish such additional information as the board believes is relevant to the board's determination of any alleged undue economic hardship. No decision of the board shall result in undue economic hardship for the property owner. In any case where undue economic hardship is claimed, the board shall make two (2) specific findings. First, the board shall determine if the owner would be entitled to a certificate of demolition without consideration of undue economic hardship. Second, the board shall determine whether the owner demonstrated an undue economic hardship.

Additional information requested by HARB as per above:

LIST OF ATTACHMENTS:

1. Staff Photographs
2. Florida Master Site File survey
3. Sanborn Map(s)
4. Polk City Directory Research

Staff Photographs
17 Salt Run Court

Front (west) Elevation

Staff Photographs
17 Salt Run Court

Front (west) Elevation

Staff Photographs
17 Salt Run Court

Staff Photographs
17 Salt Run Court

North Elevation

Staff Report pg. 11

Staff Photographs
17 Salt Run Court

Staff Report pg. 12

Staff Photographs
17 Salt Run Court

Staff Photographs
17 Salt Run Court

South Elevation

Staff Report pg. 14

Staff Photographs
17 Salt Run Court

Interior

Staff Photographs
17 Salt Run Court

Staff Report pg. 16

Staff Photographs
17 Salt Run Court

Interior

Staff Photographs
17 Salt Run Court

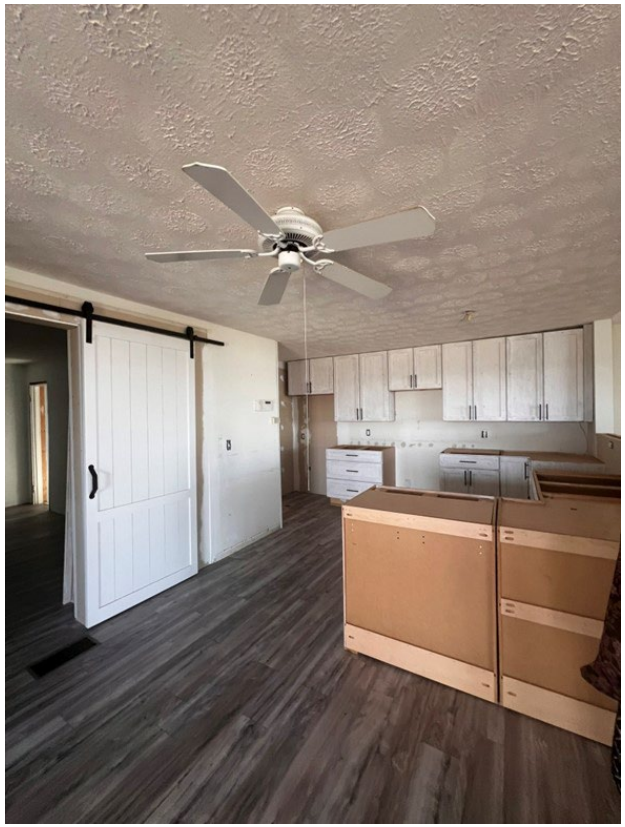

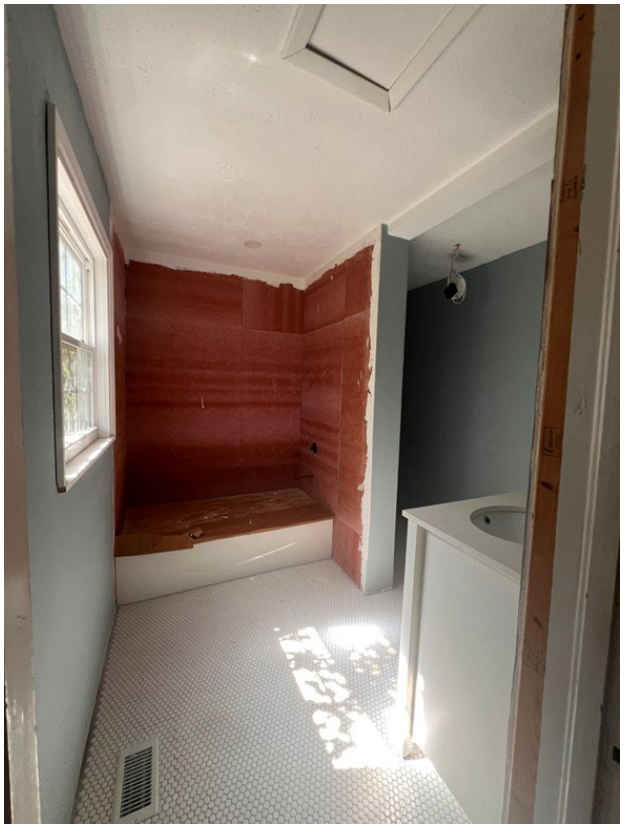

Interior

Staff Photographs
17 Salt Run Court

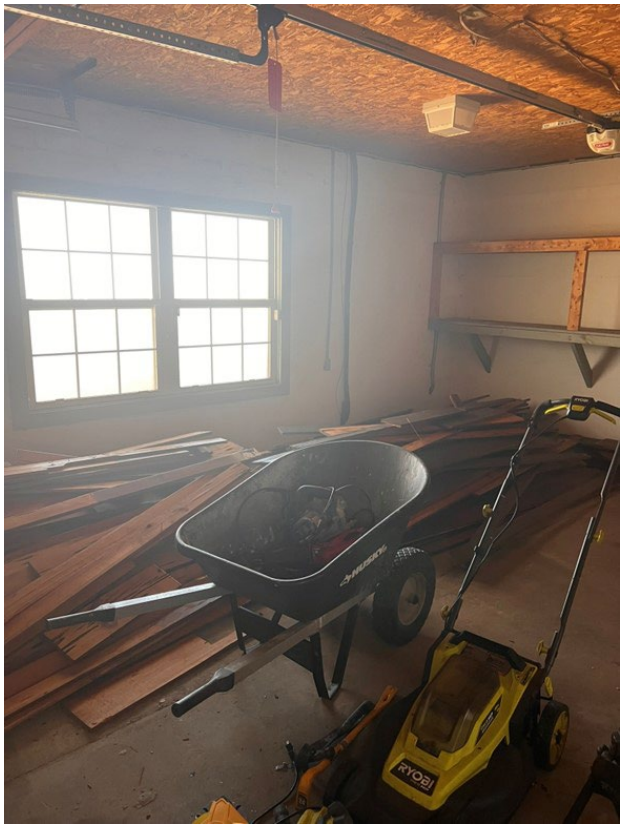

Interior

Staff Photographs
21 Salt Run Court

Front (west) Elevation

Staff Photographs
21 Salt Run Court

Front (west) Elevation

Staff Report pg. 21

Staff Photographs
21 Salt Run Court

Staff Report pg. 22

Staff Photographs
21 Salt Run Court

Staff Report pg. 23

Staff Photographs
21 Salt Run Court

Staff Report pg. 24

Staff Photographs
21 Salt Run Court

Interior

Staff Photographs
21 Salt Run Court

Staff Photographs
23 Salt Run Court

Front (west) Elevation

Staff Photographs
23 Salt Run Court

Staff Report pg. 28

Staff Photographs
23 Salt Run Court

Staff Report pg. 29

Staff Photographs
23 Salt Run Court

Staff Report pg. 30

Staff Photographs
23 Salt Run Court

Interior

Staff Photographs
23 Salt Run Court

Staff Report pg. 32

Staff Photographs
17 Salt Run Court

Context

Staff Photographs
17 Salt Run Court

Context

☒ Original
☐ Update

HISTORICAL STRUCTURE FORM
FLORIDA MASTER SITE FILE
Version 4.0 1/07

Site #8 SJ06322
Field Date 5-15-2015
Form Date 5-15-2015
Recorder #

Shaded Fields represent the minimum acceptable level of documentation.
Consult the *Guide to Historical Structure Forms* for detailed instructions.

Site Name(s) (address if none) 17 Salt Run Court — Multiple Listing (DHR only)
Survey Project Name Architecturial Survey of Anastasia Is. Structure — Survey # (DHR only)
National Register Category (please check one) ☒building ☐structure ☐district ☐site ☐object
Ownership: ☐private-profit ☐private-nonprofit ☐private-individual ☒private-nonspecific ☐city ☐county ☐state ☐federal ☐Native American ☐foreign ☐unknown

LOCATION & MAPPING

	Street Number	Direction	Street Name	Street Type	Suffix Direction
Address:	17		Salt Run	Court	

Cross Streets (nearest / between)
USGS 7.5 Map Name ST. AUGUSTINE — USGS Date 1988 — Plat or Other Map
City / Town (within 3 miles) St. Augustine — In City Limits? ☒yes ☐no ☐unknown — County St. Johns
Township 7S — Range 30E — Section 58 — ¼ section: ☐NW ☐SW ☐SE ☐NE Irregular-name:
Tax Parcel # 1578500000 — Landgrant
Subdivision Name Davis Shores — Block — Lot
UTM Coordinates: Zone ☐16 ☐17 Easting ☐☐☐☐☐☐ Northing ☐☐☐☐☐☐☐
Other Coordinates: X: Y: Coordinate System & Datum
Name of Public Tract (e.g., park)

HISTORY

Construction Year: 1936 ☐approximately ☐year listed or earlier ☐year listed or later
Original Use Private Residence (House/Cottage/Cabin) — From (year): — To (year):
Current Use Private Residence (House/Cottage/Cabin) — From (year): — To (year):
Other Use — From (year): — To (year):
Moves: ☐yes ☒no ☐unknown Date: Original address
Alterations: ☒yes ☐no ☐unknown Date: Nature Windows ext fabric
Additions: ☒yes ☐no ☐unknown Date: Nature 2nd story addition and decks
Architect (last name first): Builder (last name first):
Ownership History (especially original owner, dates, profession, etc.)

Is the Resource Affected by a Local Preservation Ordinance? ☐yes ☒no ☐unknown Describe

DESCRIPTION

Style Minimal Traditional — Exterior Plan Rectangular — Number of Stories 1
Exterior Fabric(s) 1. Stucco 2. Aluminum 3. shell stucco
Roof Type(s) 1. Gable 2. Shed 3.
Roof Material(s) 1. Asphalt shingles 2. 3.
Roof secondary strucs. (dormers etc.) 1. 2.
Windows (types, materials, etc.) split palladian windows/ paired 6/6 vinyl, single 1/1 vinyl

Distinguishing Architectural Features (exterior or interior ornaments) 1st floor min detail, central single entry single car garage.

Ancillary Features / Outbuildings (record outbuildings, major landscape features; use continuation sheet if needed.) (2) 1 BR cottages w/ gable /shed roofs, con. block foundation w/ single 6/6 wood DHS & raised muntins, stucco B&B exterior, small stoop w/ gable roof

DHR USE ONLY	OFFICIAL EVALUATION	DHR USE ONLY
NR List Date ☐Owner Objection	SHPO – Appears to meet criteria for NR listing: ☐yes ☐no ☐insufficient info Date Init. KEEPER – Determined eligible: ☐yes ☐no Date NR Criteria for Evaluation: ☐a ☐b ☐c ☐d (see *National Register Bulletin 15*, p. 2)	

HISTORICAL STRUCTURE FORM

Site #8 SJ06322

DESCRIPTION (continued)

Chimney: No. 1 Chimney Material(s): 1. _____ 2. Siding Aluminum
Structural System(s): 1. _____ 2. _____ 3. _____
Foundation Type(s): 1. Slab 2. _____
Foundation Material(s): 1. Concrete Block 2. _____
Main Entrance (stylistic details) Single 6 panel door with single pane side lights.

Porch Descriptions (types, locations, roof types, etc.) 2 story dock facing water under gable roof with wood posts railing and lattice - small front stoop facing street with gable roof and stucco posts.

Condition (overall resource condition): ☐excellent ☐good ☒fair ☐deteriorated ☐ruinous
Narrative Description of Resource Original #17 A, B, C now #17, #21, #23 -- all same owner.

Archaeological Remains _____ ☐Check if Archaeological Form Completed

RESEARCH METHODS (check all that apply)

☒FMSF record search (sites/surveys) ☒library research ☐building permits ☒Sanborn maps
☐FL State Archives/photo collection ☐city directory ☐occupant/owner interview ☐plat maps
☒property appraiser / tax records ☒newspaper files ☒neighbor interview ☐Public Lands Survey (DEP)
☐cultural resource survey (CRAS) ☒historic photos ☐interior inspection ☐HABS/HAER record search
☒other methods (describe) Windshield Survey
Bibliographic References (give FMSF manuscript # if relevant, use continuation sheet if needed) _____

OPINION OF RESOURCE SIGNIFICANCE

Appears to meet the criteria for National Register listing individually? ☐yes ☒no ☐insufficient information
Appears to meet the criteria for National Register listing as part of a district? ☒yes ☐no ☐insufficient information
Explanation of Evaluation (**required**, whether significant or not; use separate sheet if needed) Original Bldg A has been altered but original style evident; B and C now #21, 23 are contributing.

Area(s) of Historical Significance (see *National Register Bulletin 15*, p. 8 for categories: e.g. "architecture", "ethnic heritage", "community planning & development", etc.)
1. _____ 3. _____ 5. _____
2. _____ 4. _____ 6. _____

DOCUMENTATION

Accessible Documentation Not Filed with the Site File - including field notes, analysis notes, photos, plans and other important documents
1) Document type _____ Maintaining organization _____
Document description _____ File or accession #'s _____
2) Document type _____ Maintaining organization _____
Document description _____ File or accession #'s _____

RECORDER INFORMATION

Recorder Name Patricia Davenport Affiliation Environmental Services, Inc.
Recorder Contact Information 7220 Financial Way, Ste. 100 Jacksonville, FL 32256/ 904-470-2200/pdavenport@esinc
(address / phone / fax / e-mail)

Required Attachments

❶ USGS 7.5' MAP WITH STRUCTURE LOCATION PINPOINTED IN RED
❷ LARGE SCALE STREET, PLAT OR PARCEL MAP (available from most property appraiser web sites)
❸ PHOTO OF MAIN FACADE, ARCHIVAL B&W PRINT OR DIGITAL IMAGE FILE
If submitting an image file, it must be included on disk or CD AND in hard copy format (plain paper is acceptable). Digital image must be at least 1600 x 1200 pixels, 24-bit color, jpeg or tiff.

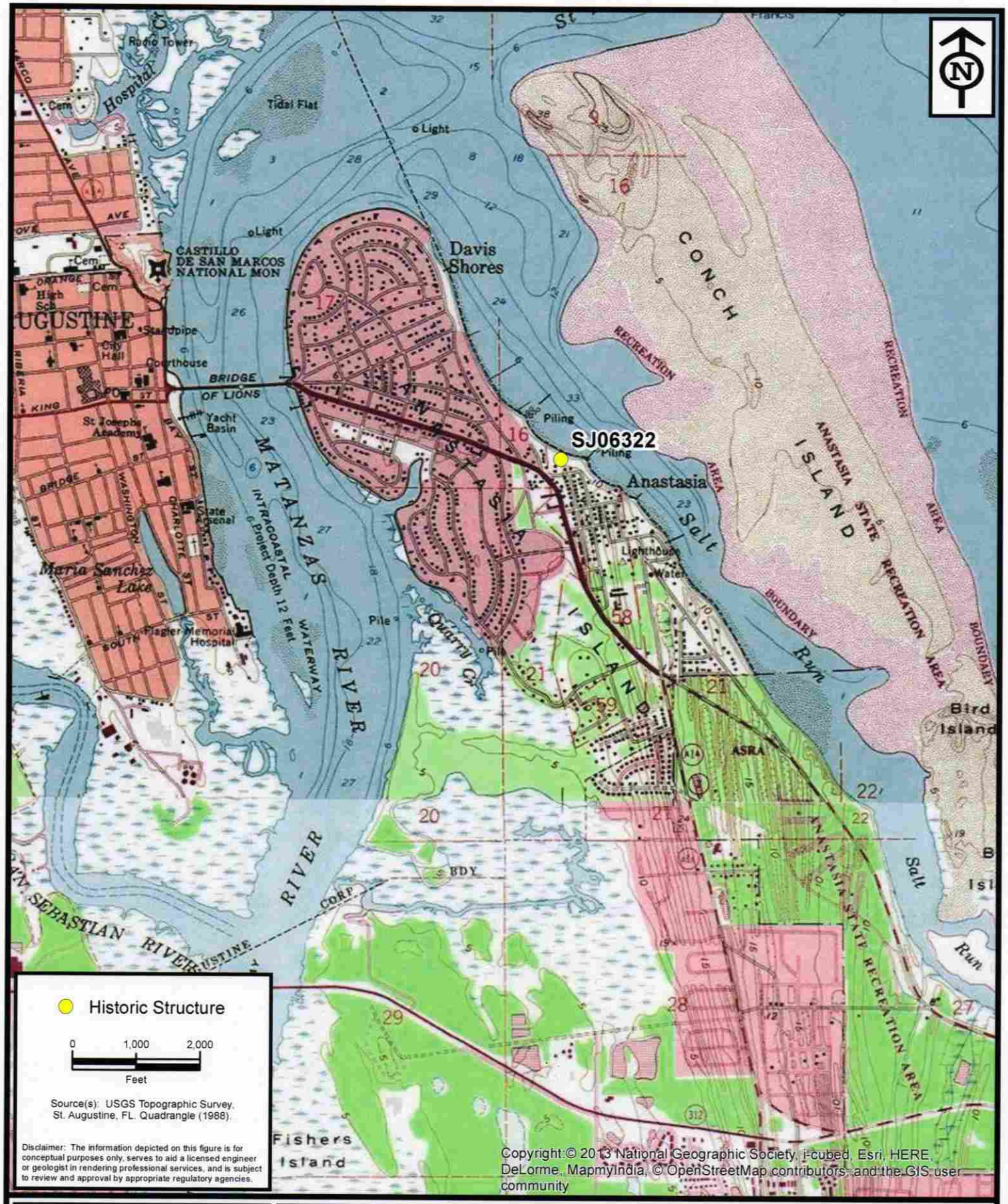

ENVIRONMENTAL SERVICES, INC.
7220 Financial Way, Suite 100
Jacksonville, Florida 32256
(904) 470-2200
(904) 470-2112 Fax
www.environmentalservicesinc.com

Project Location - SJ06322

City of St. Augustine
Historic Structure Survey

St. Johns County, Florida

Project:	AJ15055.00
Date:	May. 2015
Drwn/Chkd:	KWB/JRN
Figure:	1

Path: P:\GIS_Projects\AJ\2015\055\00\fig\FMSF Current 20150511\location\Project Location_SJ06322.mxd Date: 5/11/2015 2:12:10 PM

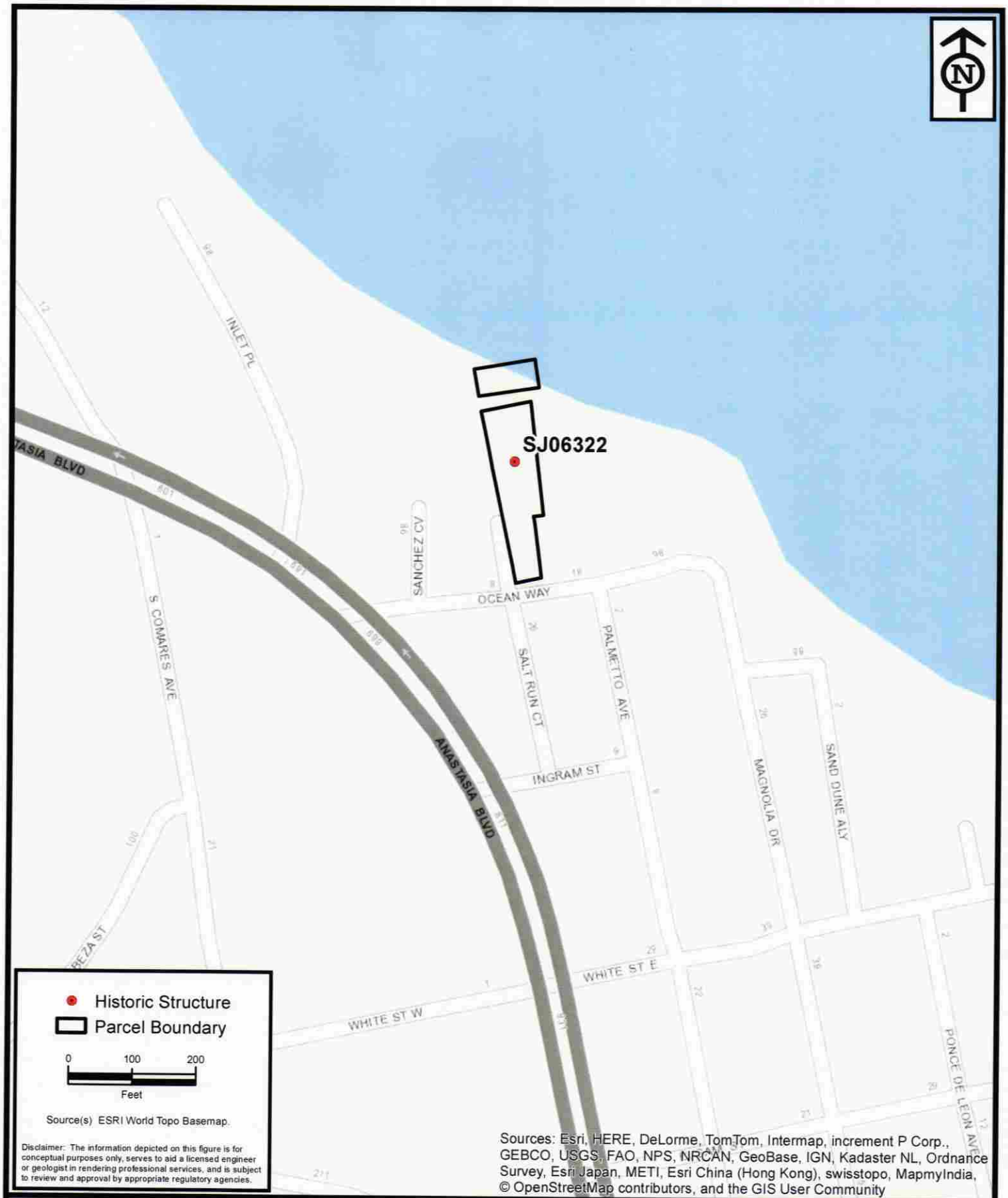

ENVIRONMENTAL SERVICES, INC.
7220 Financial Way, Suite 100
Jacksonville, Florida 32256
(904) 470-2200
(904) 470-2112 Fax
www.environmentalservicesinc.com

Parcel Location - SJ06322

City of St. Augustine
Historic Structure Survey

St. Johns County, Florida

Project:	AJ15055.00
Date:	May. 2015
Drwn/Chkd:	KWB/JRN
Figure:	2

Path: P:\GIS_Projects\AJ\2015\055\00\fig\FMSF Current 20150511\site\Parcel Location_SJ06322.mxd Date: 5/13/2015 1:37:20 PM

17
17
GOOSE COTTAGE
Secured by
ADT
800 ADT ASAP

21

SANBORN MAPS
17 Salt Run Court (14 & 16 Ocean Way)

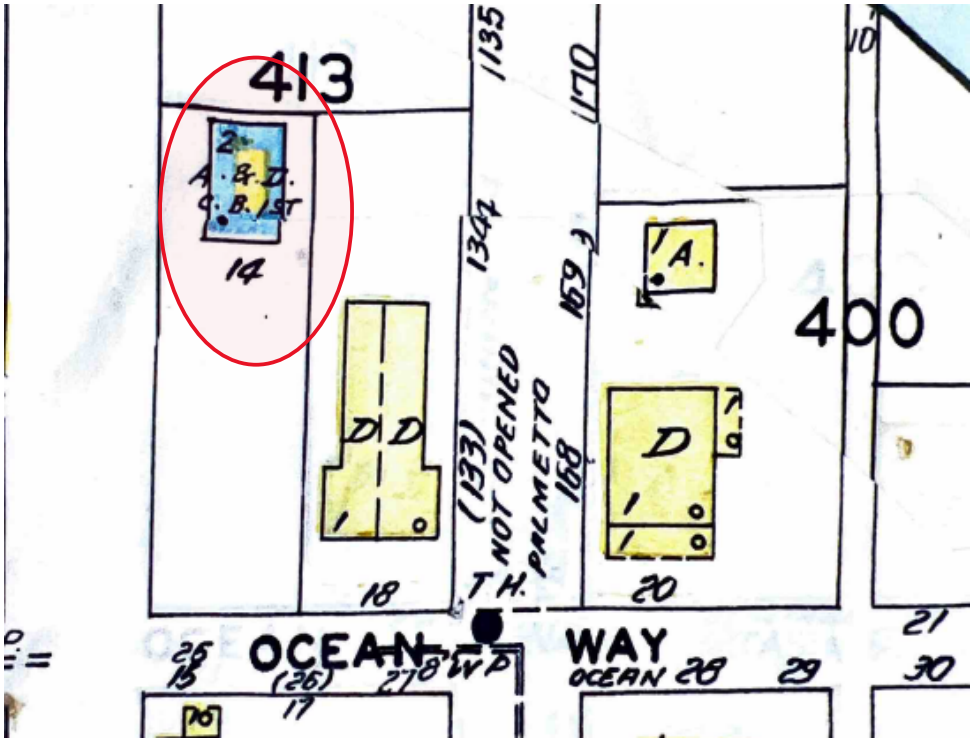

1930 updated to 1955

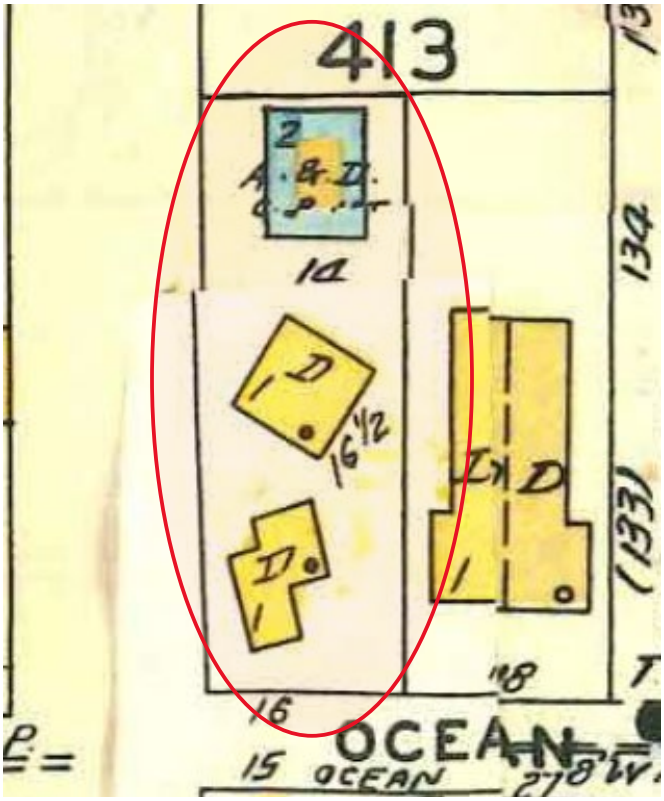

1930 updated to 1960

17 Salt Run Court (formerly 14 & 16 Ocean Way c. 1936)
SAHS POLK CITY DIRECTORY RESEARCH

DATE(S)	NAME	SYMBOLS	PROFESSION
*1955	Theodore B. Sikes (w: Pauline A.)		Field Manager, Sinclair Refining
+1960	16: James Williams		City Firefighter
1965	16: Transients		
1970	14: VACANT		
	16: William H. Burnett		Employee, Fairchilds
	16: George J. Lane		Not Listed
	16: Neil A Meir		Assistant to Auditor, F.E.C.
1975	14: VACANT		
	16: VACANT		
1980	No Listing		
1985	16a: Gale Smith		Employee, Scarlett O'Hara's
	16b: VACANT		
1990	16: Mrs. Collee H. Pitts	(o)	Teacher, St. Johns Couty Schools
	16a: Leland Richboury		Party Chief, Loren Jones Engineering Company

\+ First numeric entry found for original address
* No numeric, property listed as Matanzas Avenue (changed to Salt Run Court in 1996)
(o) Owner

CITY OF ST. AUGUSTINE
HISTORIC ARCHITECTURAL REVIEW BOARD APPLICATION

Certificate of Demolition (Full)

Case Number: HP2026-0010 **Meeting Date: Thursday, March 19, 2026**

1. NAME OF APPLICANT: Cabe Nolan
   Business (if applicable):
   Address: 6 Sanchez Cove
   City: Saint Augustine State: FL Zip Code: 32080
   Daytime Telephone: Available upon request E-Mail Address: Available upon request

2. NAME OF PROPERTY OWNER: Cabe Nolan
   Business (if applicable):
   Address: 6 Sanchez Cove
   City: Saint Augustine State: FL Zip Code: 32080
   Daytime Telephone: Available upon request E-Mail Address: Available upon request

3. PROJECT LOCATION: 17 SALT RUN CT, Saint Augustine, FL, 32080

4. LEGAL DESCRIPTION: 1-58 CARVERS ANASTASIA W PT LOTS 1 THRU 6 BLK 23 - 72.05 X 172.37 X 18.86 X 105.7 X 37.13 & LOT 1 BLK 24 OR1004/1241 & 1078/1321(C/D) & 1952/1984 & 4830/1503 & 6155/1815(D/C) & 6155/1807(L/A) & 6155/1804(P/R)

5. SCOPE OF WORK: to demolish three (3) residential buildings, constructed c.1936, that are recorded in the Florida Master Site File and not located in a district.

Information attached by applicant includes:

- Application Agreement
- Photographs of Existing Conditions
- Property Survey with Proposed Building Footprint

Received February 13, 2026
Planning and Building Dept.

HARB APPLICATION AGREEMENT

In filling out this application:

- **I understand that it becomes part of the Public Record of the City of St. Augustine and hereby certify that all information contained herein is accurate to the best of my knowledge.**
- **I further understand that if this application is for an *Opinion of Appropriateness*, I must still obtain a *Certificate of Appropriateness* before applicable permits can be issued for project work to begin. If this application is for a *Certificate of Appropriateness, Demolition*, or *Partial Demolition*, and it is approved, I am required to obtain other development approvals, archaeological review, and a building permit as necessary prior to starting project work.**
- **Once a hearing date has been set and a legal notice has been published or posted, I, or an authorized representative, must be prepared to present the request at the scheduled hearing date. The cost of subsequent hearings requiring re-noticing due to continuance will be assessed to the applicant.**
- **I have been made aware that applications must be sufficiently complete at the time of submittal or may be delayed to a future meeting. Relevant information necessary for application review shall include but not be limited to the items referenced in the "Plan Requirements" section of the Architectural Guidelines for Historic Preservation (AGHP) depending on the scope and scale of the project. The minimum application requirements are marked as required submittal documents in this online application. Contact Planning Staff if the project is unique and needs to be addressed in a different manner. Minor details may be submitted in the portal up to 10 days before the meeting and HARB will determine if additional materials may be presented at the meeting.**

All applicants/owners of record must sign the application agreement. If the property applicant/owner is a governmental agency; licensed business or company; incorporated organization; or an administered estate, an authorized agent may sign. If the applicant is different than the property owner, the application must be signed by both parties. An Authorization Form signed by the property owner(s) and notarized, must be submitted only in the absence of the property owner's signature or where an authorized agent signs in lieu of the property owner.

Project Address: 17 Salt Run Ct., St. Augustine, FL 32080

Applicant's Name: Cabe Nolan Applicant's Signature: _____

Owner's Name: Cabe Nolan Owner's Signature: _____

Owner's Name: _____ Owner's Signature: _____

Owner's Name: _____ Owner's Signature: _____

(Can add additional signature page if needed)

Florida Statute 286.0105 states that a person appealing any decision by this board at any meeting regarding this application may need a verbatim record of the proceedings which includes testimony and evidence upon which the appeal is to be based.

Received February 13, 2026
Planning and Building Dept.

Received February 13, 2026
Planning and Building Dept.

Received February 13, 2026
Planning and Building Dept.

Received February 13, 2026
Planning and Building Dept.

Received February 13, 2026
Planning and Building Dept.

Received February 13, 2026
Planning and Building Dept.

Received February 13, 2026
Planning and Building Dept.

Received February 13, 2026
Planning and Building Dept.

Received February 13, 2026
Planning and Building Dept.

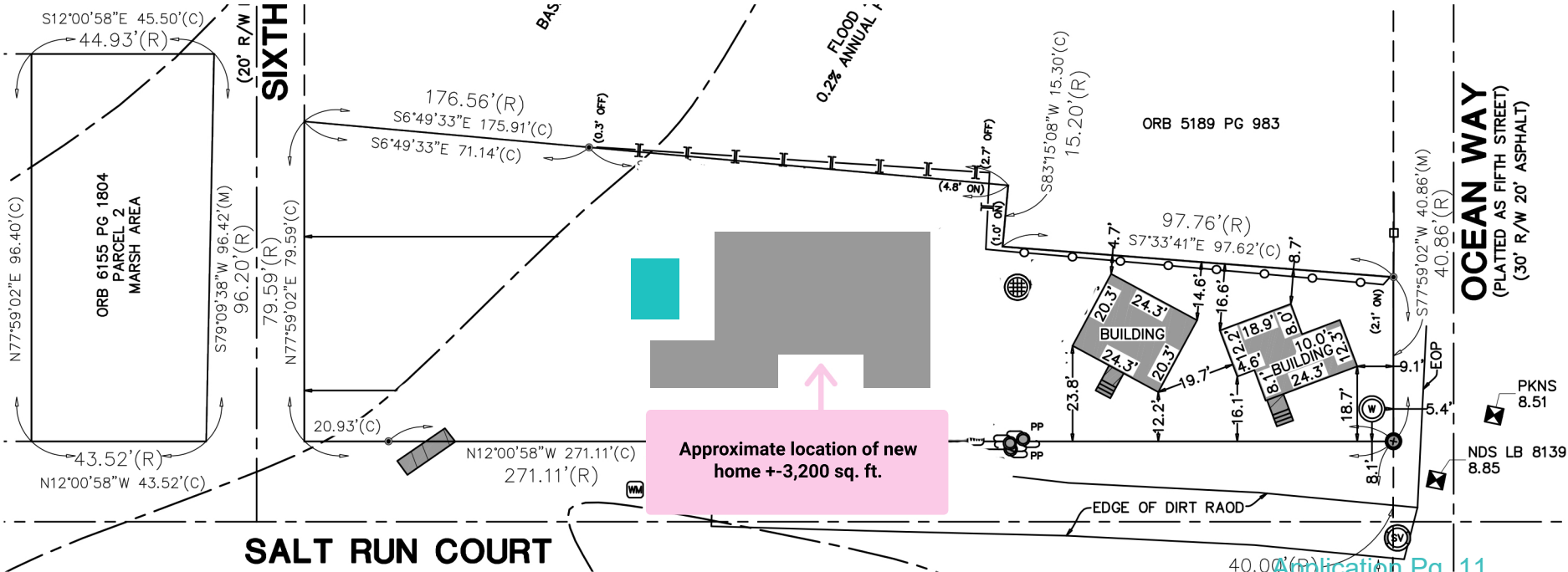

CITY OF ST. AUGUSTINE HISTORIC ARCHITECTURAL REVIEW BOARD

STAFF REPORT AND RECOMMENDATION

Prepared for March 19, 2026 Meeting

Application HP2026-0014 Address: 27 Sevilla Street

Florida Specialty Roofing Services, LLC – Applicant
Ancient City Baptist Church – Owner

Project description: For partial demolition of a church building, constructed in 1895, that is recorded in the Florida Master Site File and contributing to the Model Land Company National Register Historic District, including removal of existing roofing materials on the main church structure and towers and replacement with roof covering of a different design.

Architectural Style:	Romanesque Revival	Florida Master Site File:	SJ00336
National Register:	Model Land Company NRHD: Contributing	Construction date:	1895
Archaeology Zone:	IIE	Zoning District:	RS-1
Parcel number:	2051100000		
Agenda Item:	7(b)	Previous Action(s):	N/A

STAFF SUMMARY AND ANALYSIS:

This Romanesque Revival church building is located on the northwest corner of Sevilla and Carrera Streets and is contributing to the Model Land Company National Register Historic District.

The applicant is seeking approval to replace the existing roof materials on the primary church structures with a Brava synthetic slate shingle material.

Detailed analysis and additional comments can be found in the staff responses to the Demolition Review Criteria on page 3 of this staff report. Any partial demolition of a structure that contributes to a National Register Historic District and entails permanent removal of an exterior architectural feature or replacement with a new feature that does not meet the criteria for in-kind replacement requires review and approval by the HARB.

STAFF RECOMMENDATION:

Based on a review of the AGHP and without the support of evidence to the contrary, staff finds that the board can **APPROVE** a **Certificate of Demolition for Partial Demolition** at **27 Sevilla Street** if the HARB can make the following findings related to the proposed replacement roof material:

1. It maintains the historic character and integrity of the structure and is compatible with the historic structure's building envelope; and,
2. It meets the Secretary of the Interior's Standards for Rehabilitation #9 as a compatible contemporary material that closely replicates slate roof shingles, although the proposed shingles may be thicker, wider, and have a different edge that the slate material originally on the roof.

Candice Seymour

Candice Seymour, Historic Preservation Planner

SUMMARY SCOPE OF WORK:

1. Partial demolition to include:
    a. Removal of existing asphalt and cementitious roof materials on the primary church building and towers.
    b. Replacement with Brava synthetic slate tiles
        i. Color: Graphite (Dark Grey)
        ii. Tile sizes to be custom manufactured for the towers on-site.

DEMOLITION REVIEW CRITERIA (AGHP):

1. Whether or not the structure is within or is immediately facing a locally designated historic preservation zoning district. N/A

2. Whether or not the structure is within and contributing to a National Register Historic District. Yes, the building contributes to the Model Land Company National Register Historic District.

3. The contribution of the architectural element(s) being proposed for removal to the historic integrity of the building and the streetscape. The existing roofing material on the church is primarily a modern architectural shingle; however the conical primary entrance tower roof features a material that staff and the applicant have agreed appears to be a cementitious shingle, though a sample of the material is needed to confirm this hypothesis. Loss of these existing materials may not have an impact on the structure's historic integrity if an appropriate replacement material is installed. According to historic documentation and evidence left within the structure's iconic conical tower, the original roof of the church was a slate tile.

4. The impact of the loss of the architectural element(s) on the building and along the streetscape. The Ancient City Baptist Church is architecturally unique and significant within the Model Land Company National Register Historic District, and the roof of the church is a prominent feature of the building. An inappropriate replacement roof material would visually impact the character-defining roof and could impact the architectural integrity of the structure.

5. Whether or not the architectural element(s) will be replaced, and the impact of replacement or lack thereof, on the building and along the streetscape. The applicant proposes to replace the existing architectural and (probable) cementitious roof shingles with Brava synthetic slate shingles in a dark grey color that would emulate the color of the loose slate tiles found within the tower attic. The loose slate tiles, when compared with the proposed replacement are more matte in appearance and far thinner in profile than the 1" profile of the Brava tiles. There may be other synthetic slate materials that would more closely match the original in profile. The Brava tiles are also squared with heavy rustication on the bottom edge, unlike the rounded, slightly smoother edge of the original slate; however, the applicant has submitted evidence to show that the size and shape of the Brava tiles can be customized on-site as needed. The customized tile is proposed for the slate roof of the towers which would taper in size as the cone tapers to the top. The church's standard sloping roofs are proposed to have 12" wide single width Brava tiles. Staff has not found any documentation relating to the original width of the slate tiles on the flat slopes of the roof. *Preservation Brief 29: The Repair, Replacement, and Maintenance of Historic Slate Roofs* indicates that, while there was no standard sizing for historic slate roofs, most slate tiles were between 6" and 14" in width, with tiles 8"-12" in width most common on residential and institutional buildings. The tiles found in the tower appear to have varied widths consistent with the tapering necessary to clad the conical roof. The sample slate provided to staff is ~6" wide at its greatest width.

6. The historical or cultural merit of the structure and/or its architectural features. The existing roof materials have little cultural merit and were likely chosen to reflect the original slate roof in a modern, economical material. It is unclear when the slate was removed. There is evidence of a roof permit issued in 1984, but no documentation related to the permit was found by staff.

7. The impact of the loss of the architectural element(s) on the historical or cultural integrity of the structure, district, and neighborhood. Loss of the original roofing material eroded the fabric of this architecturally significant structure. The applicant hope the proposed replacement material may replicate the original slate and restore the intended visual appearance of the church roof.

8. Whether or not the structure and the architectural element(s) proposed for demolition are representative of a style or type of architecture or a method of construction. The existing roof material does not reflect the Romanesque Revival style of the building, thought the original slate tiles would have been representative of the architectural style.

9. ***Whether or not the structure, or the architectural elements being removed, are the last surviving examples of its style or type of architecture or a method of construction.*** This building is the only documented example of Romanesque Revival architecture in St. Augustine. The original slate roof would have been unique in this area, as slate was not a common roof material in the region.

10. ***Whether or not the structure and/or architectural element(s) proposed for demolition are of such design, craftsmanship or materials that they either could not be reproduced or could be reproduced only with great difficulty or expense.*** The existing roofing materials are easily replaced with new materials in-kind; however, the original slate material would be difficult to replace and may be difficult to replicate precisely due to the lack of documentation or clear pictorial evidence.

11. ***The justification for the proposed partial demolition.*** The applicant seeks to reroof the entire structure for longevity as well as aesthetic purposes. Based upon discussions with the applicant and owner, the conical entry tower roof is a priority based upon its current deteriorating condition. Replacement of the roof with new authentic slate was deemed infeasible according to church staff, because the weight of the slate may strain the roof structures.

APPLICATION REQUIREMENTS, ELIGIBILITY FOR DEMOLITION REVIEW, CONDITIONS FOR PARTIAL DEMOLITION APPROVAL:

Eligibility for Partial Demolition Review (Section 28-87(3), CoSA Code of Ordinances)

The Historic Architectural Review Board (HARB) is responsible for review of all applications for demolition or partial demolition permits for historic or regulated structures. Also, review of all applications for demolition or partial demolition permits for primary structures within historic preservation zoning districts and National Register districts for potential designation as an historic landmark, and review of partial demolition permits for regulated structures not eligible for administrative approval.

Regulated Structures not eligible for administrative approval (Section 28-2 – Definitions, CoSA Code of Ordinances)

Architectural feature limited review consists of the architectural review of limited physical elements of a regulated structure to be replaced after partial demolition. This limited review will focus on the overall character of the key elements of the structure visible from the street. Key elements that will be reviewed will be roofs (shape, size, placement), exterior windows and doors (number and placement of openings, shape and pattern of panes or lites, and design features visible from outside the regulated structure such as exterior muntin with a raised profile), porches, stoops, and balconies (shape, size, placement), exterior siding (vertical, horizontal, or diagonal placement of similar sized boards, siding profile and pattern). The review is for exterior elements and may include interior works or features of architectural elements. Applications that match the replacements after a partial demolition to these existing key architectural elements or use in-kind features or materials as existing will be deemed in compliance with this limited architectural review and can be approved administratively. Applicants who do not want to use in-kind features or materials as existing, not match the replacements to those existing key architectural elements after partial demolition will be heard at a public hearing before the HARB or other designated reviewing agency. This category of limited review does not apply to properties in the Historic Preservation Zoning Districts of the City.

In-kind features or materials means using architecturally similar material and design to convey the visual appearance of the remaining parts of the feature and finish

Partial demolition a partial demolition for purposes of proposed work on a historic structure or a regulated structure within the City of St. Augustine is considered the permanent removal of 50% of the appraised value or more of historic, individual elements of the building envelope (roof, walls, porches, windows, foundations). It also includes the removal of these historic features regardless of the percentage of the appraised value when they are on visible sides of the building (visible from the street).

Regulated structure is a building or a part of a building that is the subject of a partial demolition and that is not located in the City's Historic Preservation Zoning Districts but meets the following criteria of a Historic structure: It is individually listed as historic locally or nationally, or it is a contributing property in a designated National Register District, or it is a designated historic landmark.

Criteria for Review of a Certificate of Partial Demolition (Section 28-89(2)d.4, CoSA Code of Ordinances)

In the case of partial demolition: the board shall find that the proposed replacement materials including historic materials as well as compatible substitute materials maintain the historic character and integrity of the structure and are compatible with the historic structure's building envelope or the removal will not compromise the overall historic character and integrity of the structure.

Criteria for Regulated Structures (Section 28-89(3), CoSA Code of Ordinances)

Replacement elements for regulated structures as defined in this code will be reviewed consistent with the procedures for architectural feature limited review. The board will apply the adopted design criteria, if any, for the area or AGHP if applicable to the regulated structure. If no design criteria have been adopted, the board will accept evidence and testimony to establish relevant architectural features. Some regulated structures may have architectural features that support its historic character and historic period, as well as modifications or additions over time. The board will accept evidence and testimony to establish whether the architectural features should meet preservation or reconstruction standards.

(Section 28-89(5), CoSA Code of Ordinances) **Applications for partial demolition of buildings listed on the National Register of Historic Places, contributing or potentially contributing to a historic district in the National Register of Historic Places, listed as a local historic landmark pursuant to this Code, listed as a potential landmark identified in the Historic Preservation Element of the Comprehensive Plan, Master Plan or identified by historic preservation planning staff as culturally significant within the recent past,** may apply for the demolition of additional components of the building as part of a more comprehensive rehabilitation plan. Staff may require that the application be reviewed as a full demolition with required documentation, appropriate condition assessment and a rehabilitation plan, recognizing that applicants may encounter unforeseen building damage, site conditions, flood mitigation obstacles, or other significant and demonstrable reasons justifying a more extensive partial demolition as part of the rehabilitation. In issuing a certificate of demolition or partial demolition, the board may include approval of both the partial demolition and potential related additional demolition and its rehabilitated replacement design under one application. This will allow the approval of drawings sufficient for a building permit and that all necessary requirements for the new construction related to the demolition or partial demolition are submitted for permitting review and approval by staff.

~~~~~

The building was built by 1895, is not in a Historic Preservation Zoning District or individually listed on the National Register of Historic Places, but is recorded on the Florida Master Site File and listed as a contributing building in the Model Land Company National Register Historic District. The replacement roof material does not meet the criteria for in-kind replacement or precisely match the design of the previously existing slate.

The requirements for review have been sufficiently met.
~~~~~

UNREASONABLE OR UNDUE ECONOMIC HARDSHIP:
Defined as an onerous and excessive financial burden that would be placed upon a property owner by the denial of a certificate of demolition or a similar burden which would be placed on a property owner by conditions which the Commission seeks to place on the granting of a certificate. (Section 28-2 CoSA Code of Ordinances)
Is applicant entitled to a Certificate of Demolition independent of any hardship? ☐Yes ☑ No
Did applicant submit evidence of undue economic hardship? ☐ Yes ☑ No

In any instance where an undue economic hardship, as defined in this chapter, is claimed by a property owner, the property owner may submit to the board any or all of the following information before the board makes a decision on the application for certificate of demolition: (Section 28-89(7)b, CoSA Code of Ordinances)

(Materials submitted by applicant noted with a checked box)

- ☐ 1. An estimate of the cost of the proposed construction, alteration, demolition, or removal;
- ☐ 2. The estimated market value of the property in its current condition; after completion of the proposed construction, alteration, demolition, or removal; and, in the case of a proposed demolition, after renovation of the existing property for continued use;
- ☐ 3. In the case of a proposed demolition, an estimate from an architect, developer, licensed contractor, real estate consultant, appraiser, or other real estate professional experienced in rehabilitation as to the economic feasibility of rehabilitation or reuse of the existing structure on the property;
- ☐ 4. The annual gross income from the property for the previous two (2) years; itemized operating and maintenance expenses for the previous two (2) years; and depreciation deduction and annual cash flow before and after debt service, if any, during the same period;
- ☐ 5. The remaining balance on any mortgage or other financing secured by the property and annual debt service, if any, for the previous two (2) years;
- ☐ 6. All appraisals obtained within the previous two (2) years by the owner or applicant in connection with the purchase, financing, or ownership of the property;
- ☐ 7. Any listing of the property for sale or rent, price asked, and offers received, if any, within the previous two (2) years;
- ☐ 8. The assessed value of the property according to the two (2) most recent assessments;
- ☐ 9. The real estate taxes for the previous two (2) years;
- ☐ 10. The form of ownership or operation of the property, whether an individual, sole proprietorship, for profit or not-for-profit corporation, limited partnership, joint venture, or other;

Any other information considered necessary by the board to a determination as to whether the property does yield or may yield a reasonable return to the property owner. The board may require that the property owner furnish such additional information as the board believes is relevant to the board's determination of any alleged undue economic hardship. No decision of the board shall result in undue economic hardship for the property owner. In any case where undue economic hardship is claimed, the board shall make two (2) specific findings. First, the board shall determine if the owner would be entitled to a certificate of demolition without consideration of undue economic hardship. Second, the board shall determine whether the owner demonstrated an undue economic hardship.

Additional information requested by HARB as per above:

LIST OF ATTACHMENTS:

1. Staff Photographs
2. Florida Master Site File survey
3. St. Augustine Historical Society Research: Documentation of slate roof material

Staff Photographs
27 Sevilla Street

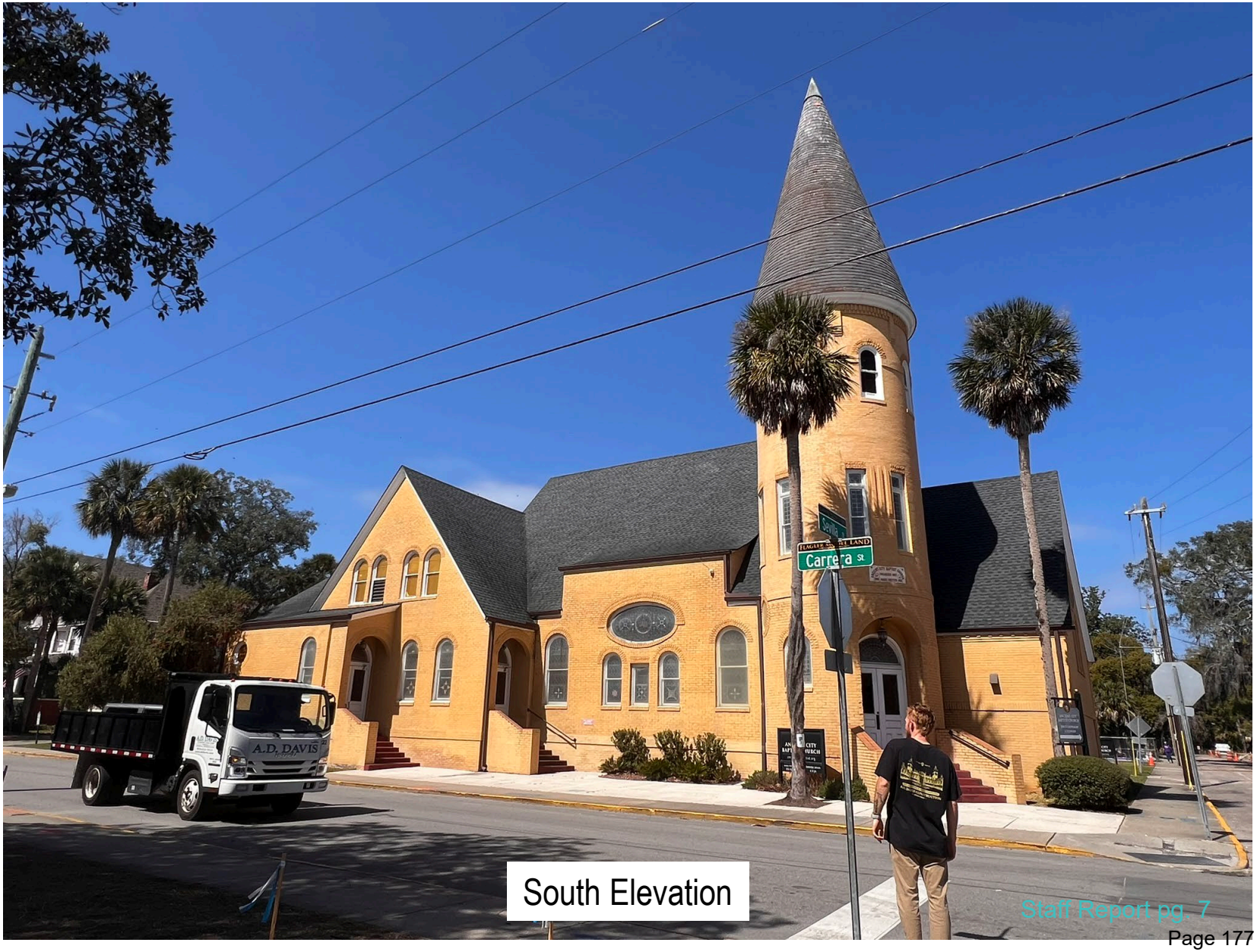

South Elevation

Staff Photographs
27 Sevilla Street

Southeast Elevation

Staff Photographs
27 Sevilla Street

East Elevation

Staff Report pg. 9

Staff Photographs
27 Sevilla Street

Staff Report pg. 10

Staff Photographs
27 Sevilla Street

North Elevation

Staff Report pg. 11

Staff Photographs
27 Sevilla Street

North Elevation

Staff Photographs
27 Sevilla Street

Staff Report pg. 13

Staff Photographs
27 Sevilla Street

West Elevation

Staff Photographs
27 Sevilla Street

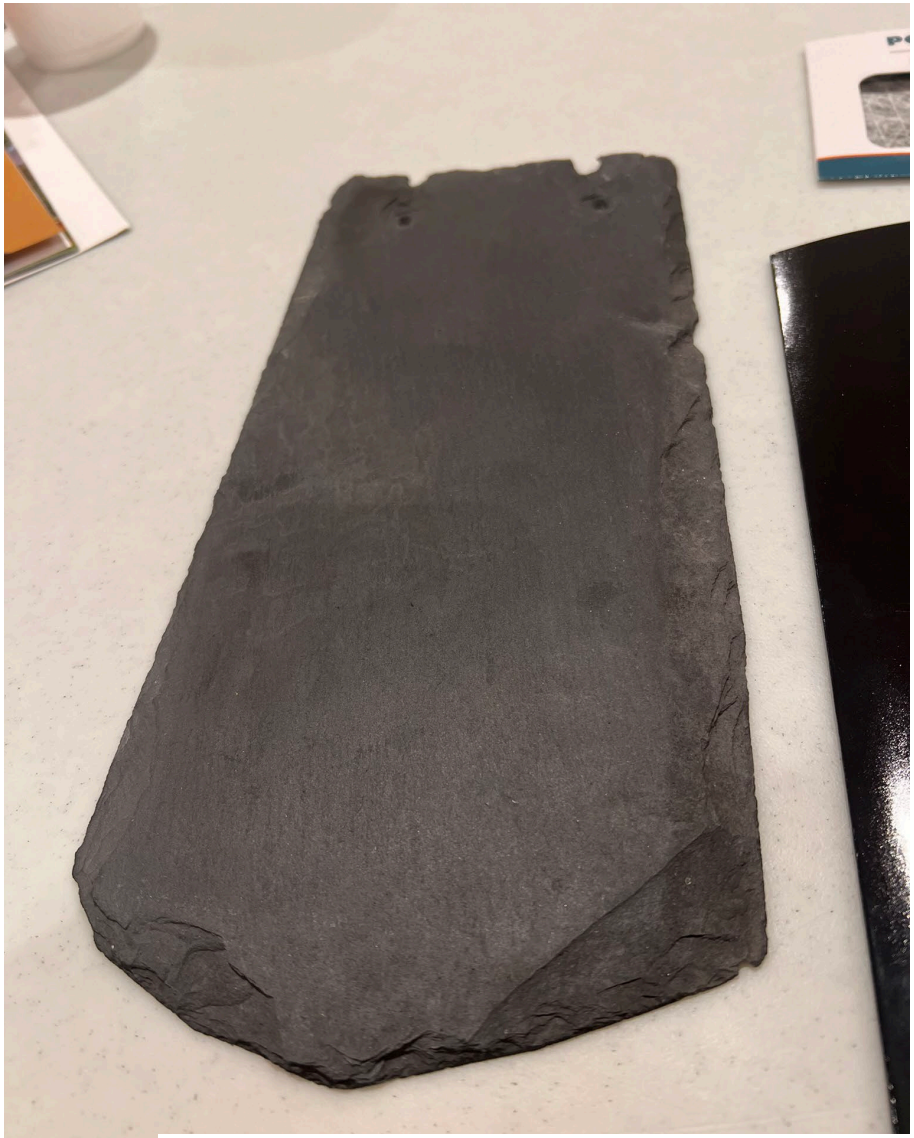

Original Slate Tile (left) and comparison between the slate and proposed Brava shingle

FLORIDA MASTER SITE FILE

HISTORIC ST. AUGUSTINE PRESERVATION BOARD

HISTORIC PROPERTIES INVENTORY FORM

I. LOCATION & LEGAL DESCRIPTION

FDAHRM 802== Site No. 8SJ336 1009==

Site Name: ANCIENT CITY BAPTIST CHURCH 830== Survey Date: 7902 820==

Address: 30 Carrera Street, St. Augustine, Fla. 32084 905==

Instructions for Locating: NW corner of Sevilla & Carrera

813== County: St. Johns 808==

Location: Model Land Company (subdivision) I (block) 17 (lot) 868==

868==

Owner of Site: Name: Ancient City Baptist Church;

Address: 30 Sevilla Street

St. Augustine, Fla. 32084 902==

Occupant or Manager: 904==

Type of Ownership: Institutional 848== Zoning: RSE

NR Classification Category: Building 916== Recording Date: 8010 832==

UTM: 17 (zone) 469490 (easting) 3306970 (northing) 890== Location: T07S (T) R30E (R) N18 (S) 812==

Map Reference: USGS St. Augustine 7.5 MIN 1956 (PR 1970) 809==

Recorder: Name & Title: Nolan, David (Historic Sites Specialist);

Address: H.S.A.P.B. 818==

II. SITE DESCRIPTION

Condition of Site:

( ) Excellent 863==

(X) Good 863==

( ) Fair 863==

( ) Deteriorated 863==

Integrity of Site:

(X) Altered 858==

( ) Unaltered 858==

(X) Original Site 858==

( ) Restored - Date: 858==

( ) Moved - Date: 858==

Threats to Site:

( ) Zoning 878==

( ) Development 878==

( ) Deterioration 878==

( ) Borrowing 878==

( ) Transportation 878==

( ) Fill 878==

( ) Dredge 878==

( ) Other 878==

SEE SITE FILE STAFF FOR ORIGINAL PHOTO(S) OR MAP(S)

II. SITE DESCRIPTION, continued.

Original Use: Religious 838== Present Use: Religious 850==

Date: +1895 844== Period: 19th Cent 845== Culture: American 840==

Architect: 872==

Builder: 874==

Style: Romanesque revival 964==

Plan Type: Irregular 966==

Exterior Fabrics: Brick, asbestos shingles 854==

Structural Systems: Masonry, brick 856==

Features of Structure: (942)

Window Type: DHS 1/1, 2/2, transom light, glass indoors, DHS multi/multi 942==

Foundation: Brick wall 942==

Roof Type: Gable intersecting 942==

Secondary Roof Structures: Cones towers, shed & hip on L, bellcast dormer 942==

Porches & Balconies: 942==

Chimney Location: 942==

Materials: (882)

Chimney: 882==

Roof Surfacing: Composition shingles 882==

Ornament Exterior: Decorative brick work over doors and windows, arched windows, stained glass 882==

Quantitative Data: (950-954)

Chimneys: 952== Dormers: 954== Stories: 1½ - 3 950==

Other: 956==

Surroundings: Mixed institutional/residential 864==

Relationship to Surroundings: Church building in residential neighborhood 859==

III. PHOTOGRAPHY

Photographic Records Numbers: 860==

Contact Prints

IV. SIGNIFICANCE

Areas of Significance: Architecture, Religion

920==

Statement of Significance: (911==)

ARCHITECTURE

This one and one-half to three-story Romanesque Revival church was constructed in 1895. Romanesque elements include the decorative brickwork above the arched windows and entryway. A cone-shaped turret rises above a three-story tower with a smaller matching turret appearing on the opposite side of the structure. Stained glass windows accent the brick building.

The range of buildings in this area of Model Land Company Subdivision go from grand winter residences of the Flagler Era to expensive homes of the 1950's erected on the former site of the Flagler Mansion, "Kirkside", to more modest homes of several different generations. There are a number of churches of extraordinary architectural interest as well. The original development here was late Victorian or Colonial Revival in style, and this continues to give the area its character. But building, or rebuilding, in the area continues to the present day, given the desirability of the neighborhood, and it contains examples from many different time periods. The area is bordered on the east by the St. Augustine National Landmark Historic District, and one building, the Grace Methodist Church on 8 Carrera Street, is listed on the National Register of Historic Places. While retaining many outstanding buildings, this area has suffered from the past demolition of outstanding buildings like Kirkside and the Barcelona Hotel. The heavily institutional presence in the neighborhood, both church and college, creates continuing traffic and parking problems, and pressures for further demolitions. There is also a drainage problem in the area when it rains.

HISTORY

The core of the Model Land Company Subdivision evolved out of four late 18th century Spanish land grants and the Royal Powder House lot which was located approximately within the area encompassed by Cordova, Riberia, Saragossa, and Carrera Streets. The eastern boundary of this section was formed by the 18th century Rosario defense line.(1) In recognition of the Spanish heritage of the old city, Flagler named most streets in the subdivision after cities in Spain. With the exception of Cordova Street and St. Andrews Place, the late 19th century development in this core section represents the best in the subdivision, and includes the monumental Flagler

(over)

V. BIBLIOGRAPHY

1. Juan Joseph Elixio de la Puente, "Plano de . . . San Agustin de Florida", January 22, 1764; Benjamin Clements, "Plan of the City of St. Augustine, 1834-1835".

2. H. H. Stackhouse, "The Model Land Tract: The Development of a Residential Neighborhood", El Escribano, Vol. 16 (1979), pp. 25-32.

3. Ancient City Baptist Church 90th Anniversary (1887-1977) pamphlet, p. 2.

churches and the large private residences of wealthy winter residents and senior officials of the Flagler organization. The Model Land Company received title to the unsold lots in 1903 and development continued through the 1950's after the demolition of the Flagler winter home, "Kirkside", and the subdividing of the estate west of the Presbyterian church into spacious lots.(2)

The Ancient City Baptist Church at 30 Carrera Street was constructed for a congregation that had existed for eight years without a church home or a pastor. In 1895 Henry M. Flagler offered to give the Baptists the lot on the corner of Carrera and Sevilla Streets if they would erect a building within two years that would exceed $10,000 in cost. The $15,000 structure was completed in February of 1895.(3) Over the years the congregation of Anciaent City Baptist Church has purchased and modified the surrounding properties to accomodate their expansion.

☐ Original
☒ Update

HISTORICAL STRUCTURE FORM
FLORIDA MASTER SITE FILE
Version 5.0 3/19

Site#8 SJ00336
Field Date 10-2-2020
Form Date 12-21-2020
Recorder # SEM

Shaded Fields represent the minimum acceptable level of documentation.
Consult the *Guide to Historical Structure Forms* for detailed instructions.

Site Name(s) (address if none) Ancient City Baptist Church — Multiple Listing (DHR only) _____
Survey Project Name St. Augustine Historic Resource Survey Update — Survey # (DHR only) _____
National Register Category (please check one) ☒building ☐structure ☐district ☐site ☐object
Ownership: ☐private-profit ☒private-nonprofit ☐private-individual ☐private-nonspecific ☐city ☐county ☐state ☐federal ☐Native American ☐foreign ☐unknown

LOCATION & MAPPING

	Street Number	Direction	Street Name	Street Type	Suffix Direction
Address:	27		Sevilla	Street	

Cross Streets (nearest / between) _____
USGS 7.5 Map Name ST. AUGUSTINE — USGS Date 1992 — Plat or Other Map _____
City / Town (within 3 miles) St. Augustine — In City Limits? ☒yes ☐no ☐unknown — County St. Johns
Township 7N — Range 30E — Section 18 — ¼ section: ☐NW ☐SW ☐SE ☐NE — Irregular-name: _____
Tax Parcel # 2051100000 — Landgrant _____
Subdivision Name Model Land Company — Block _____ — Lot _____
UTM Coordinates: Zone ☐16 ☐17 Easting ☐☐☐☐☐☐ Northing ☐☐☐☐☐☐☐
Other Coordinates: X: _____ Y: _____ Coordinate System & Datum _____
Name of Public Tract (e.g., park) _____

HISTORY

Construction Year: 1895 ☐approximately ☐year listed or earlier ☐year listed or later
Original Use: Church/Temple/Synagogue — From (year): 1895 — To (year): 2020
Current Use: Church/Temple/Synagogue — From (year): 1895 — To (year): 2020
Other Use _____ — From (year): _____ — To (year): _____
Moves: ☐yes ☒no ☐unknown Date: _____ Original address _____
Alterations: ☒yes ☐no ☐unknown Date: _____ Nature: siding in gable end
Additions: ☒yes ☐no ☐unknown Date: _____ Nature: all blgs on parcel combined
Architect (last name first): _____ Builder (last name first): _____
Ownership History (especially original owner, dates, profession, etc.)

Is the Resource Affected by a Local Preservation Ordinance? ☒yes ☐no ☐unknown Describe Demolition Review

DESCRIPTION

Style Richardsonian Romanesque — Exterior Plan Irregular — Number of Stories 3
Exterior Fabric(s): 1. Brick 2. Vinyl 3. Asbestos
Roof Type(s): 1. Gable on hip 2. Cone 3. gable, hip, catslide
Roof Material(s): 1. Asphalt shingles 2. 3.
Roof secondary strucs. (dormers etc.) 1. 2.
Windows (types, materials, etc.)
wood stained glass 1/1 sash of multiple sizes styles and groupings, oval fixed stained glass & single pane, fanlights above entrances, brick sills

Distinguishing Architectural Features (exterior or interior ornaments)
tower entry w high pitched cone roof, mult window types with decorative brickwork details, arched entries, brick belt courses & quoins & dentils

Ancillary Features / Outbuildings (record outbuildings, major landscape features; use continuation sheet if needed.)
iron fenced courtyard w brick piers & paved area w fountain accessed via arched iron gate, perimeter hedges, corner lot, well maintained landscaping

DHR USE ONLY	OFFICIAL EVALUATION	DHR USE ONLY
NR List Date _____ ☐Owner Objection	SHPO – Appears to meet criteria for NR listing: ☐yes ☐no ☐insufficient info Date _____ Init. _____ KEEPER – Determined eligible: ☐yes ☐no Date _____ NR Criteria for Evaluation: ☐a ☐b ☐c ☐d (see *National Register Bulletin 15*, p. 2)	

HISTORICAL STRUCTURE FORM

Site #8 SJ00336

DESCRIPTION (continued)

Chimney: No. 0 Chimney Material(s): 1. _____ 2. _____

Structural System(s): 1. Wood frame 2. _____ 3. _____

Foundation Type(s): 1. Continuous 2. _____

Foundation Material(s): 1. Brick 2. _____

Main Entrance (stylistic details)

at corner in tall tower, double doors, wood w half glass single pane, stain glass fanlight above, recessed arched entry

Porch Descriptions (types, locations, roof types, etc.)

NA, entry stoop of angles poured concrete steps w brick kneewalls w engaged metal handrails

Condition (overall resource condition): ☐excellent ☒good ☐fair ☐deteriorated ☐ruinous

Narrative Description of Resource

In 1895, Flagler donated the land to the congregation. Over the years, the building and property has been added to. The rear of the building is semi-attached to a 3 story structure w a cone tower, brick facade and multiple hip roof lines.

Archaeological Remains _____ ☐Check if Archaeological Form Completed

RESEARCH METHODS (select all that apply)

☒FMSF record search (sites/surveys)	☒library research	☐building permits	☒Sanborn maps
☒FL State Archives/photo collection	☐city directory	☐occupant/owner interview	☒plat maps
☒property appraiser / tax records	☐newspaper files	☐neighbor interview	☐Public Lands Survey (DEP)
☒cultural resource survey (CRAS)	☒historic photos	☐interior inspection	☐HABS/HAER record search

☒other methods (describe) City Staff

Bibliographic References (give FMSF manuscript # if relevant, use continuation sheet if needed)

OPINION OF RESOURCE SIGNIFICANCE

Appears to meet the criteria for National Register listing individually? ☐yes ☐no ☒insufficient information

Appears to meet the criteria for National Register listing as part of a district? ☒yes ☐no ☐insufficient information

Explanation of Evaluation (required, whether significant or not; use separate sheet if needed)

Excellent example of its style and may meet criteria for individual listing; it also contributes to the district

Area(s) of Historical Significance (see *National Register Bulletin 15*, p. 8 for categories: e.g. "architecture", "ethnic heritage", "community planning & development", etc.)

1. Architecture 3. _____ 5. _____

2. Community planning & developm 4. _____ 6. _____

DOCUMENTATION

Accessible Documentation Not Filed with the Site File - including field notes, analysis notes, photos, plans and other important documents

1) Document type _____ Maintaining organization _____
Document description _____ File or accession #'s _____

2) Document type _____ Maintaining organization _____
Document description _____ File or accession #'s _____

RECORDER INFORMATION

Recorder Name Patricia Davenport-Jacobs Affiliation Environmental Services, Inc.

Recorder Contact Information 7254 Financial Way, Suite 100, Jacksonville, FL 32256/9044702200/9044702112/:
(address / phone / fax / e-mail)

Required Attachments

❶ **USGS 7.5' MAP WITH STRUCTURE LOCATION CLEARLY INDICATED**

❷ **LARGE SCALE STREET, PLAT OR PARCEL MAP** (available from most property appraiser web sites)

❸ **PHOTO OF MAIN FACADE, DIGITAL IMAGE FILE**
When submitting an image, it must be included in digital AND hard copy format (plain paper grayscale acceptable). Digital image must be at least 1600 x 1200 pixels, 24-bit color, jpeg or tiff.

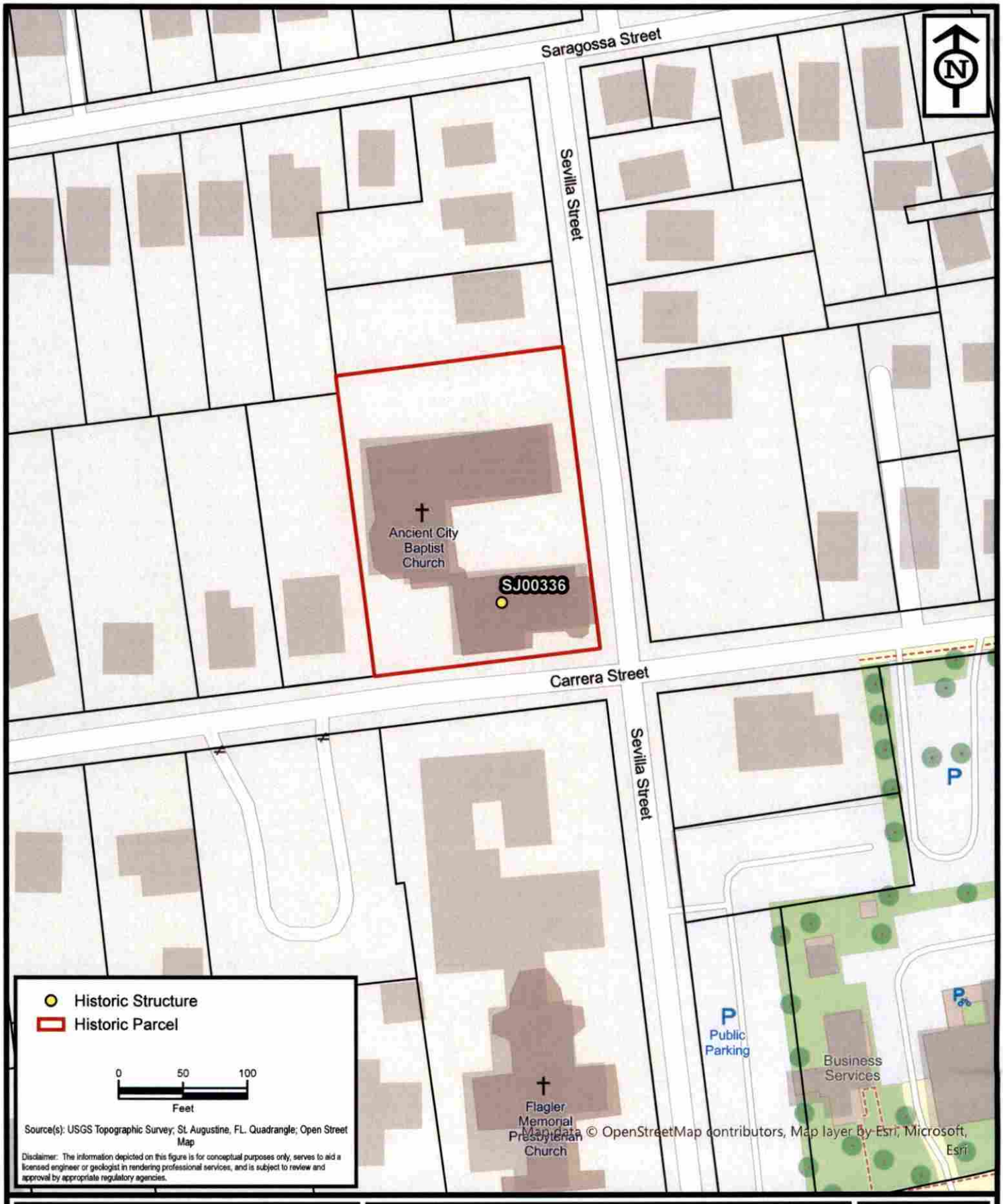

ENVIRONMENTAL SERVICES, INC.
A Terracon COMPANY
7220 FINANCIAL WAY, SUITE 100 JACKSONVILLE, FL 32256
PH. (904) 470-2200 FAX (904) 470-2112

Parcel Location - SJ00336

St. Augustine Historic Resource Mitigation & Survey Update

St. Johns County, Florida

Project No.	HK207093
Date	Dec 2020
Drawn By	AA
Checked By	JRN
Approved By	PDJ
Figure No.	2

Path: N:\GIS\Projects\2020\HK Jacksonville\HK207093_StAugResourceMitigation\Maps\HK207093_StAugResourceMitigation\HK207093_StAugResourceMitigation.aprx Date: 12/16/2020 12:25 PM

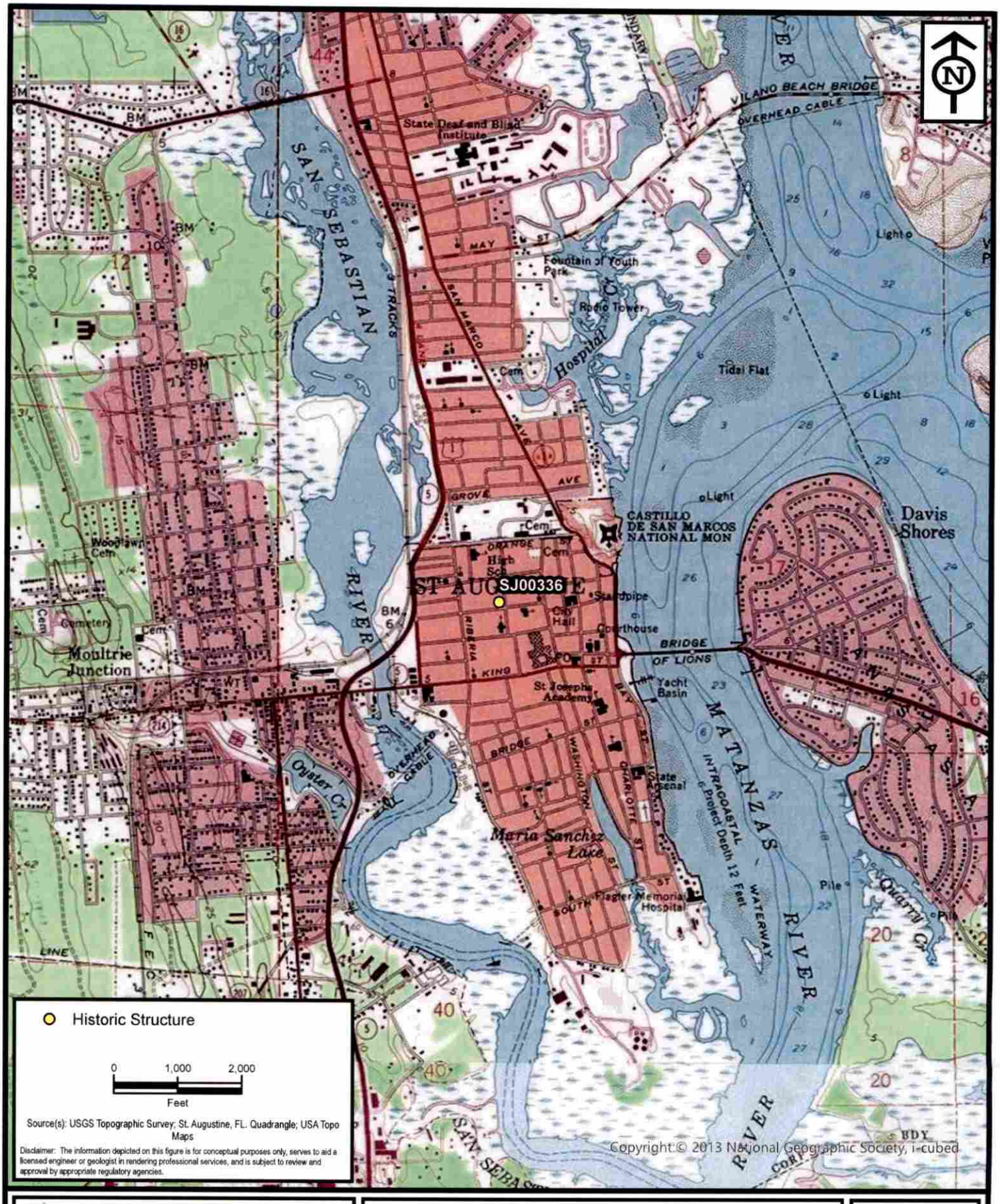

ENVIRONMENTAL SERVICES, INC.
A Terracon COMPANY

7220 FINANCIAL WAY, SUITE 100 JACKSONVILLE, FL 32256
PH. (904) 470-2200 FAX (904) 470-2112

Project Location - SJ00336

St. Augustine Historic Resource Mitigation & Survey Update

St. Johns County, Florida

Project No.	HK207093
Date	Dec 2020
Drawn By	AA
Checked By	JRN
Approved By	PDJ
Figure No.	1

Path: N:\GIS\Projects\2020\HK Jacksonville\HK207093_StAugResourceMitigation\Maps\HK207093_StAugResourceMitigation\HK207093_StAugResourceMitigation.aprx Date: 10/27/2020 3:13 PM

KODAK SAFETY FILM 5062
KODAK SAFETY FILM 5062
KODAK SAFETY FILM 5062

KODAK SAFETY

KODAK SAFETY FILM 5062

Correro

SANBORN MAPS
27 Sevilla Street (Ancient City Baptist Church)

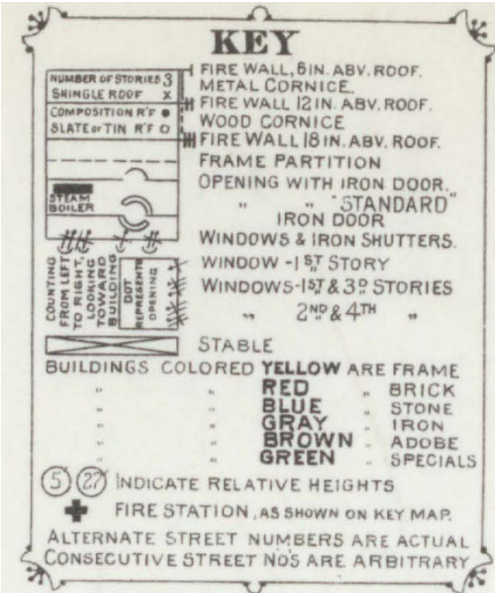

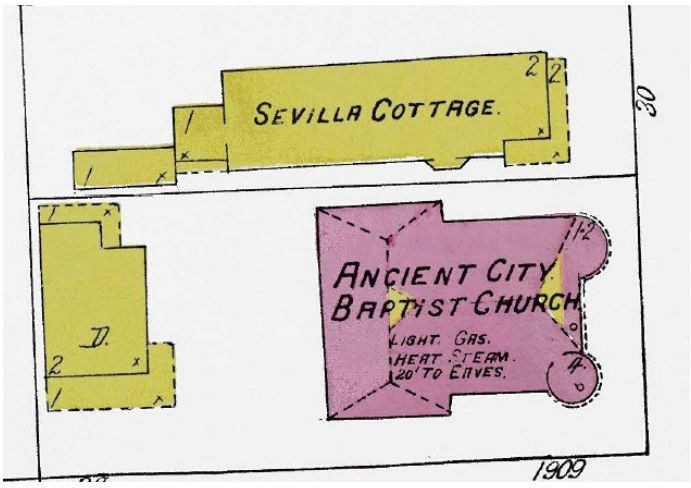

1910

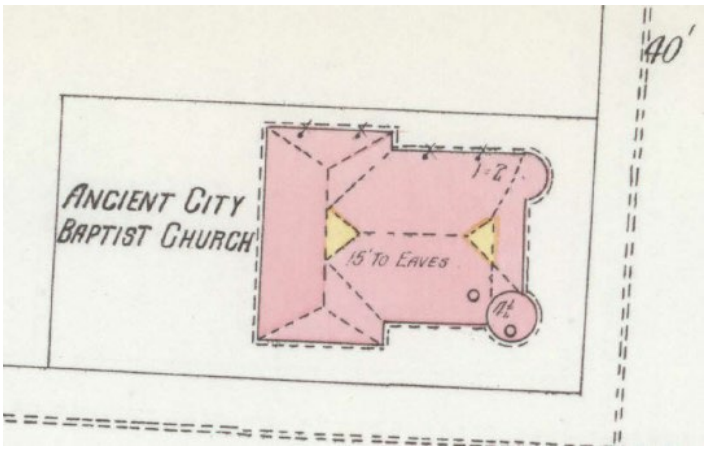

1899

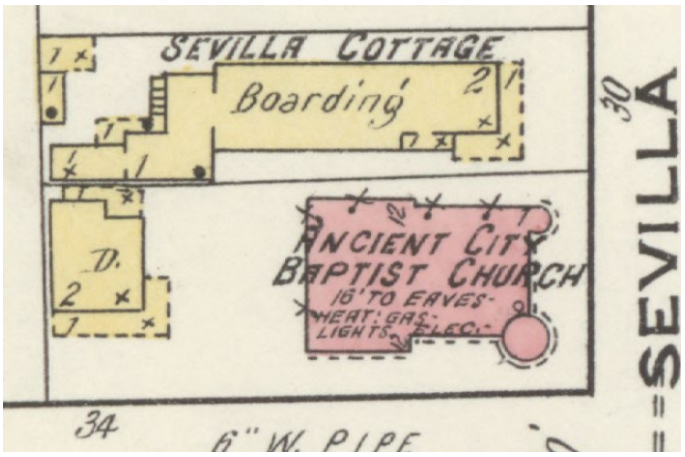

1917

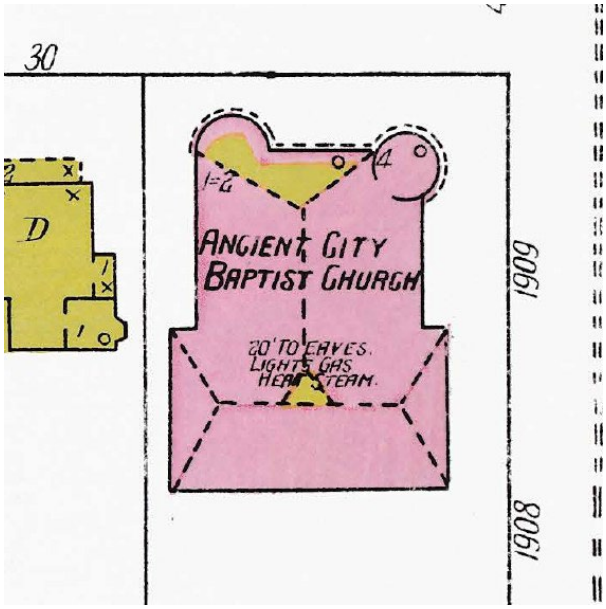

1904

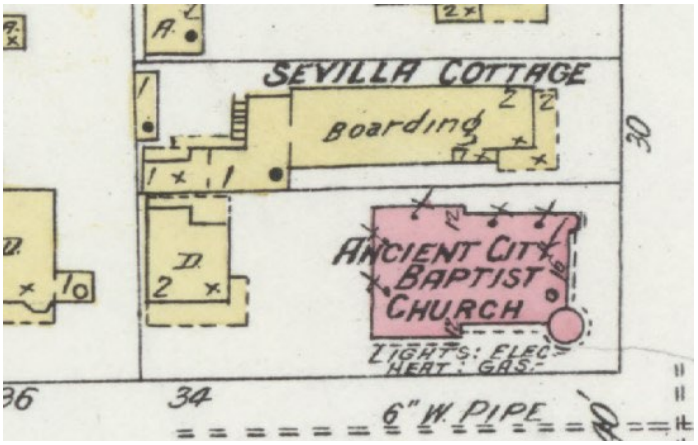

1924

SANBORN MAPS
27 Sevilla Street (Ancient City Baptist Church)

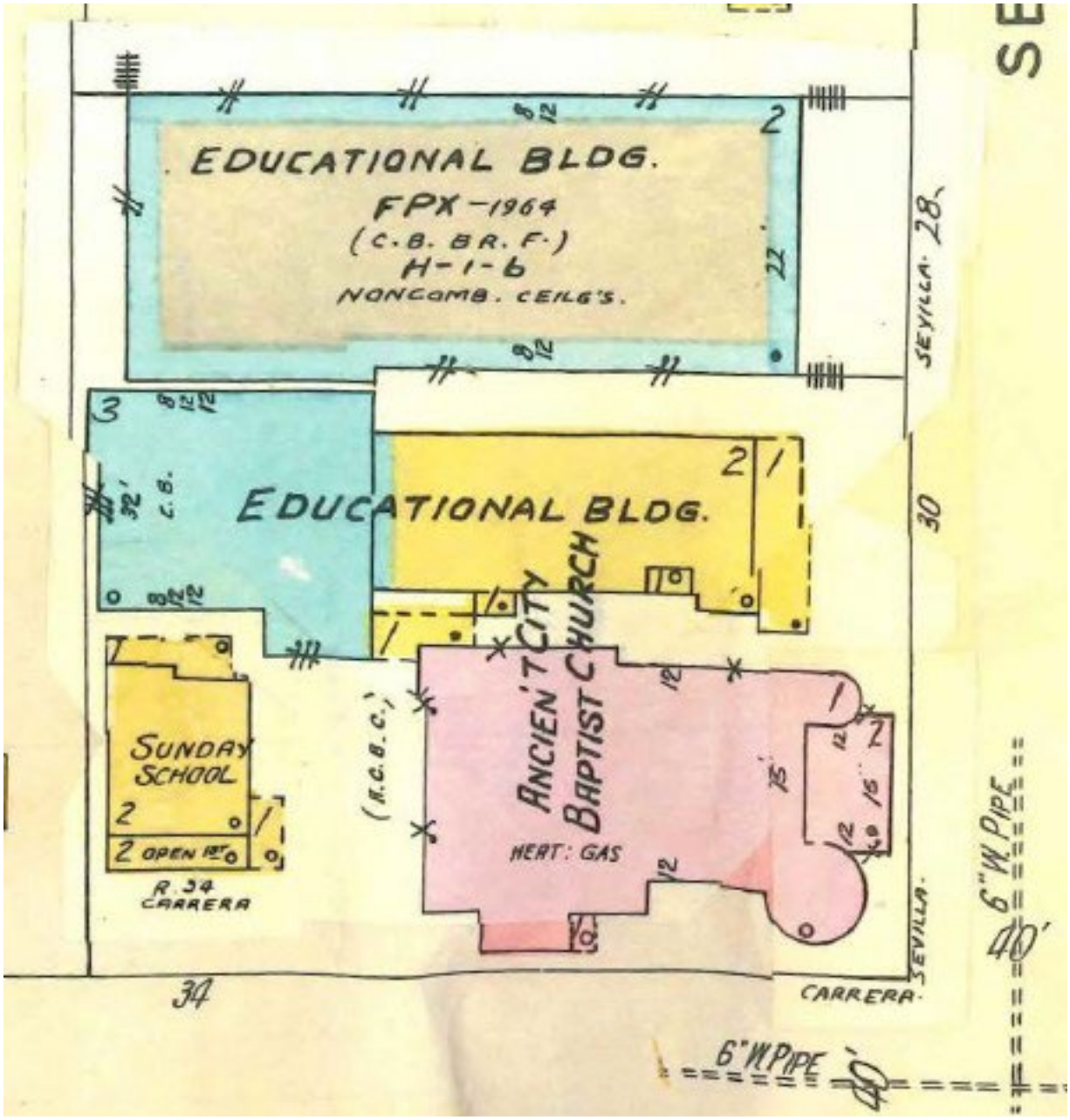

1930 updated to 1960

This February 1896 photo shows the Ancient City Baptist Church with the Barcelona Hotel in the foreground. The hotel was later torn down, and today the land provides area for a church parking lot. Special

Ancient City to mark centennial Sunday

Special to The Record 11/11/1995

Ancient City Baptist Church is marking its 100th anniversary this weekend with a series of special activities. Special guest will be the Rev. Paul D. Carmichael, a former pastor from 1962-69. He'll address a gathering of current and former members during 10:30 a.m. services at the church erected in 1895 on the corner of Carrera and Sevilla streets.

This day marks not only a special day for the members of the church, but also an historical event in the life of St. Augustine and Florida Baptists.

The day begins with 9:15 a.m. Sunday school. During the morning worship, Barry Bell and Todd Carr will be licensed to preach, with the Rev. Frank P. Northcutt, pastor of Ancient City, presenting them with the licenses.

Ancient City Baptist Church was organized in 1887 with 18 charter members. The first service was held in the Old Genovar Opera House which is where the St. George Pharmacy is presently located. The first converts were baptized in the waters of Matanzas Bay north of Fort Marion (now renamed Castillo de San Marcos.)

The first service at the current structure was held Feb. 10, 1895, in the Sunday School rooms. The sanctuary first used in April of that year.

The tan brick church building with its soaring Norman Spire, steeply gabled roof and beautiful oval stained glass windows was erected on land given by Henry M. Flagler. In a "History of Florida Baptists" written by the late Rev. J.L. Rosser, pastor of Ancient City Baptist Church from 1939-48, this was the only permanent church building for Baptists at that time between Jacksonville and Key West.

In 1893 Dr. G.J. Johnson was sent by the State Board of Missions to pastor the congregation and build a house of worship. During a service March 11, 1894, Dr. Johnson announced publicly that a site had been given by Henry M. Flagler. At that time, services were held in the St. Johns County courthouse.

Flagler gave the land, it was said, with the condition that the building be erected within two years, at a cost of not under $10,000, and that it be debt free.

Flagler also asked that the church never put a mortgage on the property and that a bell never be be hung in the tower. Flagler's home, Kirkside, faced Valencia Street with his bedroom on Carrera Street, and some believed that he did not want to hear the bell booming in his bedroom window.

The State Mission Board, anxious to establish a permanent building along the east coast, appropriated money towards the building and with pledges the total came to $14,345.37. The cost of the building plus the property donated by Flagler made a property value in 1895 of 240,000; free of all debt.

Information in church files and a file maintained by the St. Augustine Historical Society show that the Ancient City Baptist Church building was constructed by a Mr. Manning of Orlando. He brought a foreman and three carpenters with him from Orlando and hired two men from St. Augustine to do the masonry work – Benjamin Pacetti and Bartola Canova.

John L. Center was brought from West Palm Beach by Flagler to put on the slate roof. The slate shingles were fastened with copper screws. Flagler paid Center for his work. Bricks for the walls and tower were brought in Birmingham, Ala., with an exception of 3,000 which could not be furnished by the plant in Alabama due to a plant fire.

Three tourist ladies from Massachusetts paid the cost of the interior decorations and furnishings of the church. Among the treasured relics is a silver communion pitcher with chalices and a 40-pound Bible given in 1895 that graced the altar table. Time has yellowed the pages and dimmed the ink on an original hymn composed for the church dedication. Somebody induced Dr. S.J. Smith, author of the words to the hymn "America," to compose a special hymn to commemorate the Baptist event. The first verse reads:

"Founded On Thee
Our Only Lord
Thy Church shall Stand
As Stands Thy Word
No Fear The Storm
Nor Dread the Shock"

Samuel N. Brown of Boston, Mass., described as the most liberal contributor toward the building and furnishings of this church house, also composed a special hymn that was used at the dedication. An opening verse of his hymn reads:

"Today, within this sacred place,
From wordly cares, our safe retreat,
A Fathers love, a Saviors grace,
Hath gladly led our willing feet.

During the 1987 celebration commemorating the centennial of the organization of the church, a living history of Ancient City Baptist Church, "The Long Road With God" was made available to the public. To mark the 100th anniversary of the erection of the church, local artist, K. David Brown has created a painting of the church's exterior. It will be unveiled during the 10:30 a.m. service, and a limited edition prints numbered and signed by the artist will be available after the morning worship service. K. David Brown will be present and will hand sign the prints. (For further details, see accompanying story.)

There will be former members, staff and friends to celebrate on Sunday. Following the morning worship hour, a catered luncheon will be held in the fellowship hall. A concert in the church sanctuary, by the North Greenville College's Baptist Student Union Christian music ensemble, Joyful Sound, will follow.

There will be no evening worship service this Sunday.

Pastor Northcutt and Carl M. Peters II, minister of music, will be leading the services. Limited edition prints of the church will be available to the public through the church office at 27 Sevilla St. Also, church history books can be obtained from the office. These books provide history of St. Augustine along with the history of Ancient City Baptist Church.

CITY OF ST. AUGUSTINE
HISTORIC ARCHITECTURAL REVIEW BOARD APPLICATION

Certificate of Demolition (Partial)

Case Number: HP2026-0014 **Meeting Date: Thursday, March 19, 2026**

1. NAME OF APPLICANT: Cody Bates
   Business (if applicable): Florida Specialty Roofing Services LLC
   Address: 974 Explorer Cove Suite 144
   City: Altamonte Springs State: FL Zip Code 32701
   Daytime Telephone: Available upon request E-Mail Address: Available upon request

2. NAME OF PROPERTY OWNER: Hugh Peters
   Business (if applicable): Ancient City Baptist Church
   Address: 27 Sevilla St
   City: St. Augustine State: FL Zip Code 32084 :
   Daytime Telephone: Available upon request E-Mail Address: Available upon request

3. PROJECT LOCATION: 27 SEVILLA ST, Saint Augustine, FL, 32084

4. LEGAL DESCRIPTION: 1-176 MODEL LAND CO SUB CITY LOTS 17 18 19 & 20 BLK I

5. SCOPE OF WORK: for partial demolition of a church building, constructed in 1895, that is recorded in the Florida Master Site File and contributing to the Model Land Company National Register Historic District, including removal of existing roofing materials on the main church structure and towers and replacement with roof covering of a different material and design.

Information attached by applicant includes:

- Application Agreement
- Project Proposal
- Photographs of Existing Conditions
- Proposed Replacement Product Specifications
- Custom Field Manufacturing and Installation Process

Received March 2, 2026
Planning and Building Department

HARB APPLICATION AGREEMENT

In filling out this application:

- **I understand that it becomes part of the Public Record of the City of St. Augustine and hereby certify that all information contained herein is accurate to the best of my knowledge.**
- **I further understand that if this application is for an *Opinion of Appropriateness*, I must still obtain a *Certificate of Appropriateness* before applicable permits can be issued for project work to begin. If this application is for a *Certificate of Appropriateness, Demolition*, or *Partial Demolition*, and it is approved, I am required to obtain other development approvals, archaeological review, and a building permit as necessary prior to starting project work.**
- **Once a hearing date has been set and a legal notice has been published or posted, I, or an authorized representative, must be prepared to present the request at the scheduled hearing date. The cost of subsequent hearings requiring re-noticing due to continuance will be assessed to the applicant.**
- **I have been made aware that applications must be sufficiently complete at the time of submittal or may be delayed to a future meeting. Relevant information necessary for application review shall include but not be limited to the items referenced in the "Plan Requirements" section of the Architectural Guidelines for Historic Preservation (AGHP) depending on the scope and scale of the project. The minimum application requirements are marked as required submittal documents in this online application. Contact Planning Staff if the project is unique and needs to be addressed in a different manner. Minor details may be submitted in the portal up to 10 days before the meeting and HARB will determine if additional materials may be presented at the meeting.**

All applicants/owners of record must sign the application agreement. If the property applicant/owner is a governmental agency; licensed business or company; incorporated organization; or an administered estate, an authorized agent may sign. If the applicant is different than the property owner, the application must be signed by both parties. An Authorization Form signed by the property owner(s) and notarized, must be submitted only in the absence of the property owner's signature or where an authorized agent signs in lieu of the property owner.

Project Address: 27 Sevilla St, St. Augustine, FL 32084

Applicant's Name: Cody Bates Applicant's Signature: Cody Bates (Mar 1, 2026 18:41:14 EST)

Owner's Name: Hugh Peters Owner's Signature: Hugh Peters (Mar 1, 2026 18:36:47 EST)

Owner's Name: _____ Owner's Signature: _____

Owner's Name: _____ Owner's Signature: _____

(Can add additional signature page if needed)

Florida Statute 286.0105 states that a person appealing any decision by this board at any meeting regarding this application may need a verbatim record of the proceedings which includes testimony and evidence upon which the appeal is to be based.

Received March 2, 2026
Planning and Building Department

Microsoft Word - HARB Full Acknowledgement

Final Audit Report 2026-03-01

Created:	2026-02-28
By:	FL Specialty Roofing (office@flsroof.com)
Status:	Signed
Transaction ID:	CBJCHBCAABAA9ywef3-lpRhauseNrSlmoItALDQunlzU

"Microsoft Word - HARB Full Acknowledgement" History

Document created by FL Specialty Roofing (office@flsroof.com)
2026-02-28 - 10:42:52 PM GMT

Document emailed to Hugh Peters (hpeters154@att.net) for signature
2026-02-28 - 10:42:56 PM GMT

Email viewed by Hugh Peters (hpeters154@att.net)
2026-03-01 - 11:35:59 PM GMT

Document e-signed by Hugh Peters (hpeters154@att.net)
Signature Date: 2026-03-01 - 11:36:47 PM GMT - Time Source: server

Document emailed to Cody Bates (cody@flsroof.com) for signature
2026-03-01 - 11:36:49 PM GMT

Email viewed by Cody Bates (cody@flsroof.com)
2026-03-01 - 11:38:08 PM GMT

Document e-signed by Cody Bates (cody@flsroof.com)
Signature Date: 2026-03-01 - 11:41:14 PM GMT - Time Source: server

Agreement completed.
2026-03-01 - 11:41:14 PM GMT

Powered by Adobe Acrobat Sign

Received March 10, 2026
Planning and Building Dept.

CITY OF
ST AUGUSTINE.
EST. 1565

Owner's Authorization For Agent

Ryan Kruse is/are hereby authorized TO ACT ON BEHALF OF Ancient City Baptist Church, the owner(s) of those lands described within ☒ the attached application, or ☐ described within the previously filed Application number HP2026-0014, and as described in the attached deed or other such proof of ownership as may be required, in applying to the City of St. Augustine's HARB Board, for an application related to the structure located at: 27 Sevilla St. St. Augustine FL 32084

BY: _____
Signature of Owner

Hugh M. Peters
Print Name of Owner

904-806-4083
Telephone Number

State of Florida

County of St. Johns

Signed and sworn before me on this 9th day of March, 2026

By Veronica J Bates

Identification verified: Drivers License

Oath sworn: X Yes ____ No

VERONICA J BATES
Notary Public - State of Florida
Commission # HH 762404
My Comm. Expires Feb 1, 2030
Bonded through National Notary Assn.

Notary Signature: _____

My Commission expires: 2/01/2030

Rev:120219 jw

Received March 6, 2026
Planning and Building Dept.

FL Specialiy
Roofing

PROJECT PROPOSAL

Prepared For :
Ancient City Baptist Church
Bob Blake
bblakeusn@comcast.net

Project Name :
Ancient City Baptist Church - Brava Roof Replacement

Project Address :
27 Sevilla Street
St. Augustine, FL 32084

Date Prepared :
February 19, 2026

Scope of Work:

FL Specialty Roofing proposes to provide the following material and labor services to ensure your project meets or exceeds all Florida Building Codes and Manufacture installation requirements.

TEAR-OFF AND REMOVAL:
1. Remove the existing roof down to the original wood deck, including drip edge, roof accessories, vents, and valley flashings. All debris will be hauled away and properly disposed of.
2. At the eaves, remove decking as needed to access wall-to-truss connection points. Install Simpson Strong-Tie gusset straps at these locations, then reinstall new decking once the straps are secured.
3. Install new 15/32" plywood decking over all existing spaced decking, except turrets, which will receive 1/4" plywood decking. Replace any rotted or damaged fascia (painting not included). The base price includes all decking and a $1,500 lumber allowance for additional wood/fascia replacement. Any work exceeding this allowance will require a Change Order at the rates listed below.

DRY-IN AND UNDERLAYMENT:
1. Furnish and install new drip edge, 24" W-valley metal, transition flashing, wall flashing, and surface-mounted headwall flashing where required. At brick conditions, saw-cut (reglet) masonry and install new wall flashing. At siding conditions, carefully detach siding as necessary to install concealed wall flashing, then reinstall siding. All flashings shall be fabricated from factory-painted .032" aluminum.
2. Install 1 layer of Polystick TU Plus Self-Adhering, Self-Sealing, High-Temperature Underlayment, direct to deck. On turrets, install Polyglass 2-Ply (MTS Plus + TU Plus) Underlayment system.
3. On low slope areas, install Modified Bitumen cap and base sheet roofing system.

TILE INSTALLATION AND COMPLETION:
1. Install BRAVA Single-Width Slate Composite Tile, direct to deck, with all required BRAVA accessory components, using 2 stainless steel fasteners. On turrets, install Brava Multi-Width Slate turret package.
2. Install all new Gooseneck Vents (painted), and Pipe Covers (painted).

PROJECT MANAGEMENT AND EQUIPMENT:
1. Dedicated field supervisor on site to coordinate materials, equipment, labor, and all aspects of the project.
2. Documented and communicated project schedule to ensure smooth and safe operations for all workers and residents.
3. Proper machinery and equipment to efficiently and safely perform all aspects of the project (tear off, loading, install).
4. Site cleaned daily and full site cleaning upon completion.

Additional Remarks:

Includes all equipment and machinery required (scaffolding, manlift, forklift, equipter, etc.)

Warranty:

- FL Specialty 10 Year Workmanship Warranty
- BRAVA ENDURANCE Limited Lifetime Material Warranty

Total Project Price: _____

****Pricing is good for 30 days from the date of this proposal*

Received March 2, 2026
Planning and Building Department

Cody Bates

FL Specialty Roofing

Feb 19, 2026 | 30 Photos

Roof Inspection

Received March 2, 2026
Planning and Building Department

Section 1

Application Pg. 7
Page 207 of 269

Received March 2, 2026
Planning and Building Department

1

Project: Ancient City Baptist Church
Date: Feb 2, 2026, 10:44 AM

2

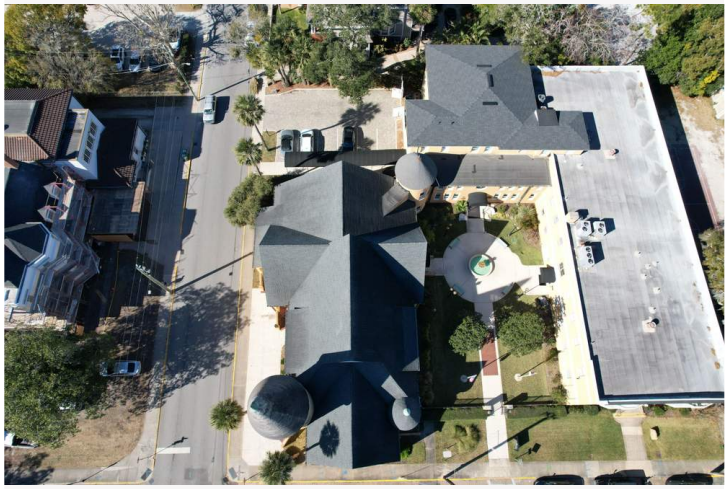

Project: Ancient City Baptist Church
Date: Feb 2, 2026, 10:44 AM

Received March 2, 2026
Planning and Building Department

3

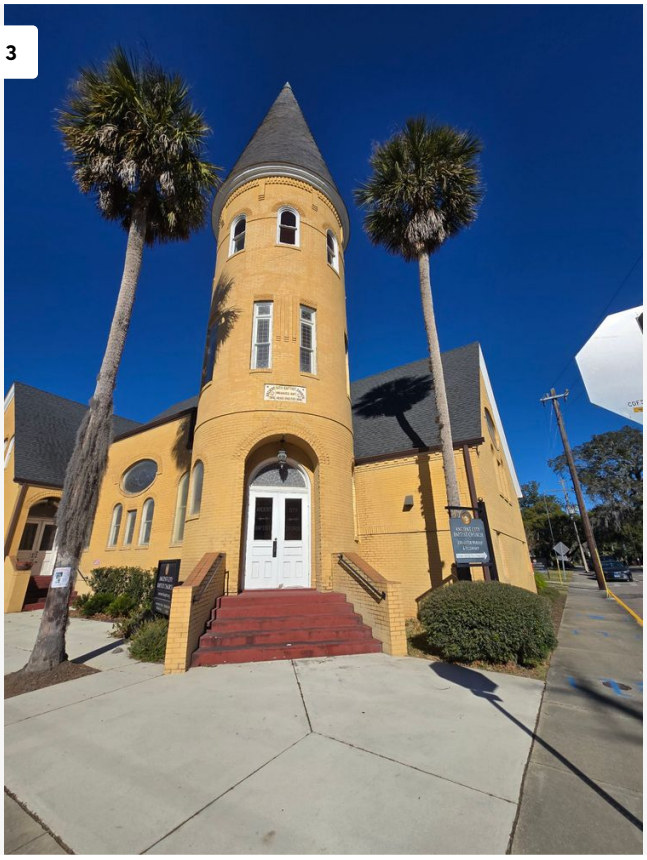

Project: Ancient City Baptist Church
Date: Feb 2, 2026, 10:14 AM

4

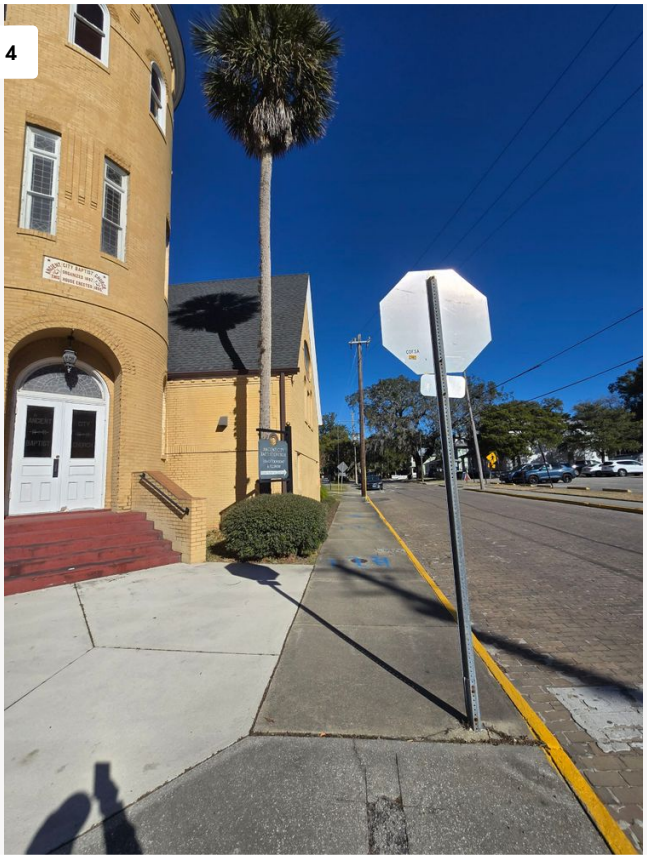

Project: Ancient City Baptist Church
Date: Feb 2, 2026, 10:14 AM

Application Pg. 9
Page 209 of 269

Received March 2, 2026
Planning and Building Department

5

Project: Ancient City Baptist Church
Date: Feb 2, 2026, 10:14 AM

6

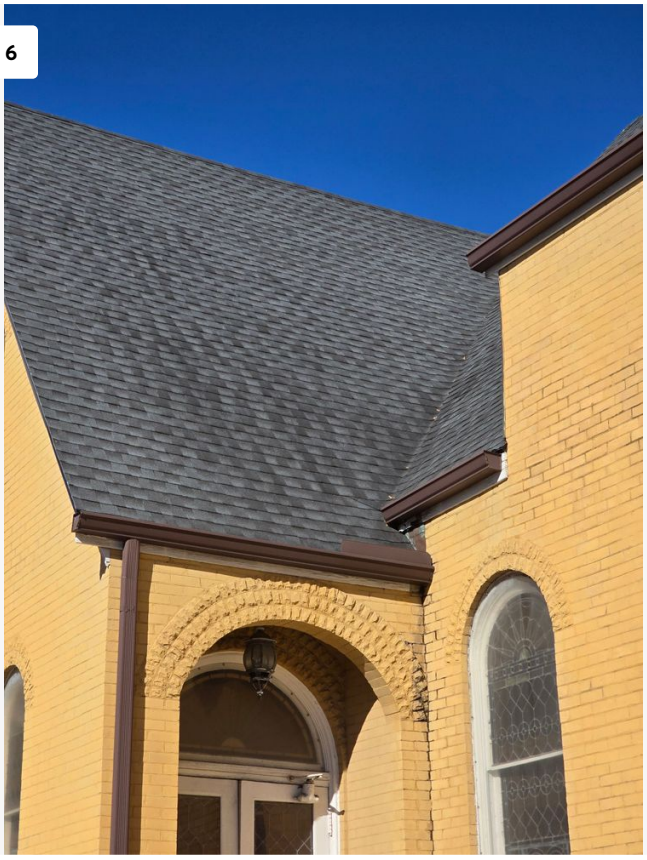

Project: Ancient City Baptist Church
Date: Feb 2, 2026, 10:14 AM

Received March 2, 2026
Planning and Building Department

7

Project: Ancient City Baptist Church
Date: Feb 2, 2026, 10:13 AM

8

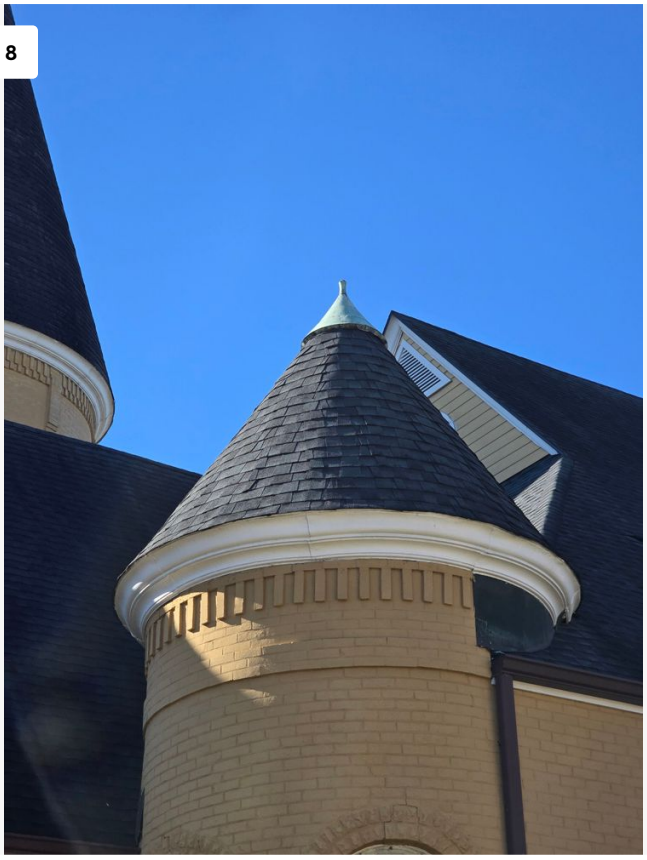

Project: Ancient City Baptist Church
Date: Feb 2, 2026, 10:13 AM

Application Pg. 11
Page 211 of 269

Received March 2, 2026
Planning and Building Department

9

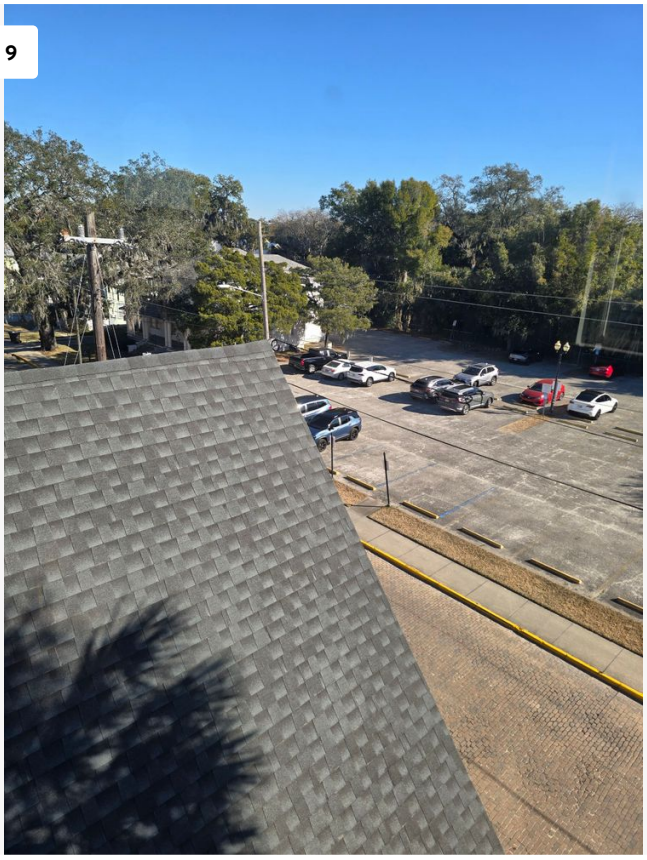

Project: Ancient City Baptist Church
Date: Feb 2, 2026, 10:02 AM

10

Project: Ancient City Baptist Church
Date: Feb 2, 2026, 10:02 AM

Application Pg. 12
Page 212 of 269

Received March 2, 2026
Planning and Building Department

11

Project: Ancient City Baptist Church
Date: Feb 2, 2026, 10:01 AM

12

Project: Ancient City Baptist Church
Date: Feb 2, 2026, 10:42 AM

Application Pg. 13
Page 213 of 269

Received March 2, 2026
Planning and Building Department

13

Project: Ancient City Baptist Church
Date: Feb 2, 2026, 10:41 AM

14

Project: Ancient City Baptist Church
Date: Feb 2, 2026, 10:42 AM

Application Pg. 14
Page 214 of 269

Received March 2, 2026
Planning and Building Department

15

Project: Ancient City Baptist Church
Date: Feb 2, 2026, 10:42 AM

16

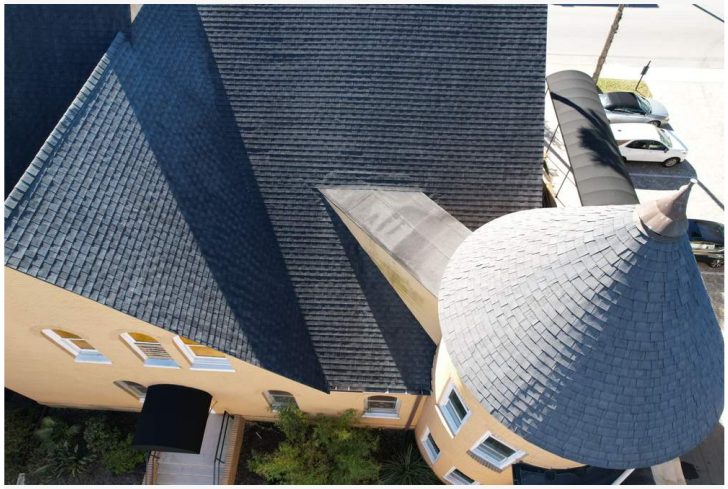

Project: Ancient City Baptist Church
Date: Feb 2, 2026, 10:42 AM

Application Pg. 15
Page 215 of 269

Received March 2, 2026
Planning and Building Department

17

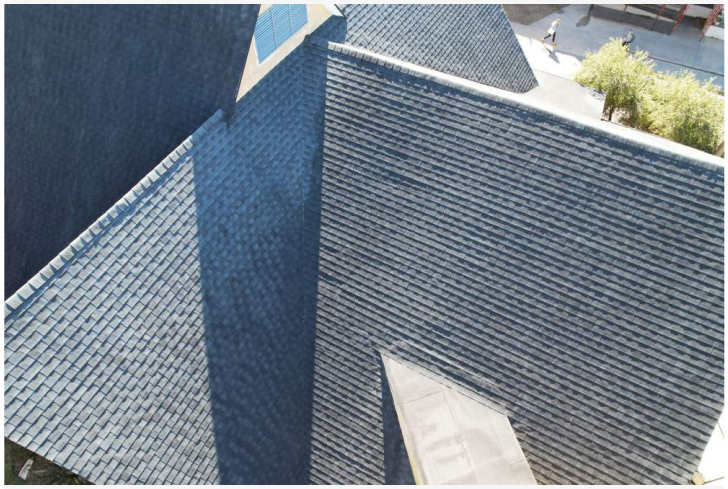

Project: Ancient City Baptist Church
Date: Feb 2, 2026, 10:42 AM

18

Project: Ancient City Baptist Church
Date: Feb 2, 2026, 10:44 AM

Application Pg. 16
Page 216 of 269

Received March 2, 2026
Planning and Building Department

19

Project: Ancient City Baptist Church
Date: Feb 10, 2026, 9:56 AM

20

Project: Ancient City Baptist Church
Date: Feb 2, 2026, 10:45 AM

Application Pg. 17
Page 217 of 269

Received March 2, 2026
Planning and Building Department

21

Project: Ancient City Baptist Church
Date: Feb 2, 2026, 10:43 AM

22

Project: Ancient City Baptist Church
Date: Feb 2, 2026, 10:43 AM

Application Pg. 18
Page 218 of 269

Received March 2, 2026
Planning and Building Department

23

Project: Ancient City Baptist Church
Date: Feb 2, 2026, 10:43 AM

24

Project: Ancient City Baptist Church
Date: Feb 2, 2026, 10:43 AM

Application Pg. 19
Page 219 of 269

Received March 2, 2026
Planning and Building Department

25

Project: Ancient City Baptist Church
Date: Feb 2, 2026, 10:43 AM

26

Project: Ancient City Baptist Church
Date: Feb 2, 2026, 10:43 AM

Application Pg. 20
Page 220 of 269

Received March 2, 2026
Planning and Building Department

27

Project: Ancient City Baptist Church
Date: Feb 2, 2026, 10:43 AM

28

Project: Ancient City Baptist Church
Date: Feb 2, 2026, 10:45 AM

Application Pg. 21
Page 221 of 269

Received March 2, 2026
Planning and Building Department

29

Project: Ancient City Baptist Church
Date: Feb 2, 2026, 10:44 AM

30

Project: Ancient City Baptist Church
Date: Feb 2, 2026, 10:44 AM

Application Pg. 22
Page 222 of 269

Received March 2, 2026
Planning and Building Department

BRAVA

Beautifully Authentic High-Performance Roofing

Slate Roof Tile

Received March 2, 2026
Planning and Building Department

Build
With BRAVA

Whether you're taking your first steps, navigating mountain trails, walking beach side under blue skies, or sharing laughs around a campfire, life's core memories bring us back to one place: home.

Make it a home *Built with BRAVA*.

Received March 2, 2026
Planning and Building Department

Inspiring Beauty

Every BRAVA Roof Tile Is A Choice Tile.

Extraordinary color, superior mineral pigment throughout, variegation within each tile and super fine detail create an unparalleled natural stone look.

Compression Molded

Compression molding makes our tiles stronger and more detailed.

Thicker, More Material

The gauge of BRAVA material is thicker and provides more headlap than comparable synthetic roofing products. The finished roof is more durable and dimensional.

Sustainable

We turn plastic destined for the landfill into a beautiful and durable roof made of recycled material that itself is fully recyclable.

Received March 2, 2026
Planning and Building Department

Color For Life

Chemical or dye-based colorants get broken down by the sun over time and they degrade as you see in old comic books or photographs.

Pure mineral pigments keep a 3,000 year old wall colorful and paintings that are hundreds of years old remain bright.

BRAVA tiles are made with pure mineral pigments found in nature – colorants that can last for centuries.

Received March 2, 2026
Planning and Building Department

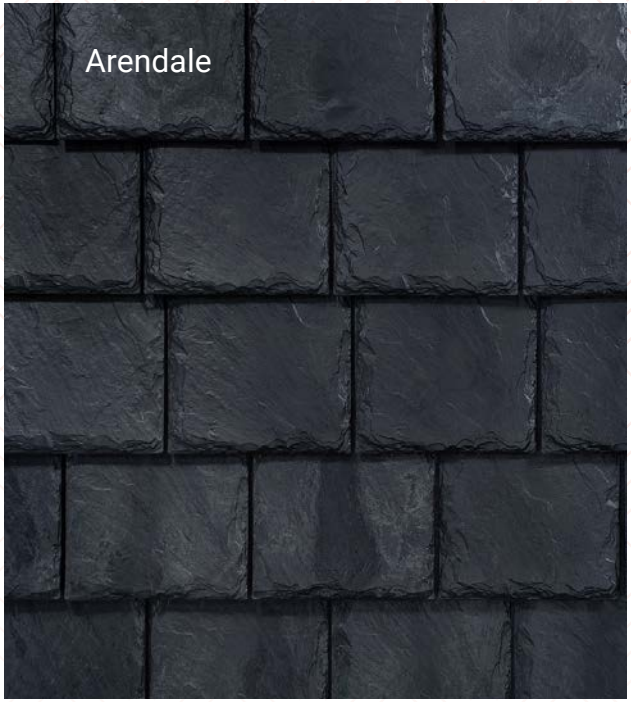

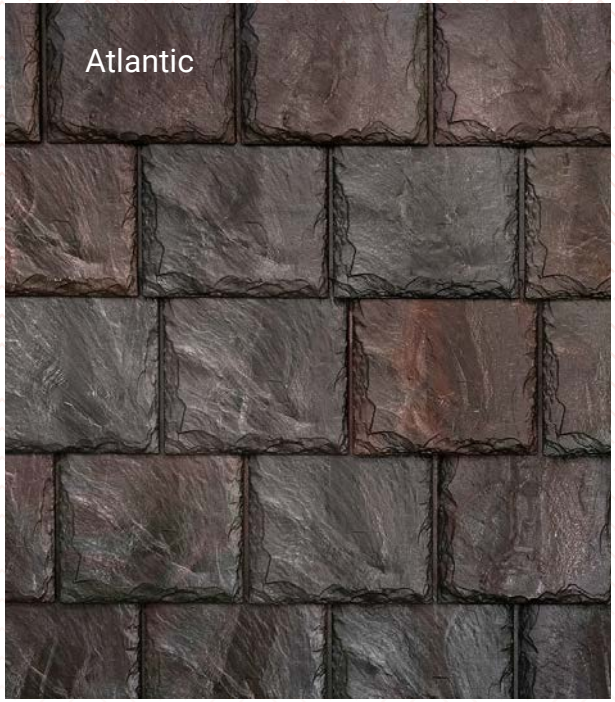

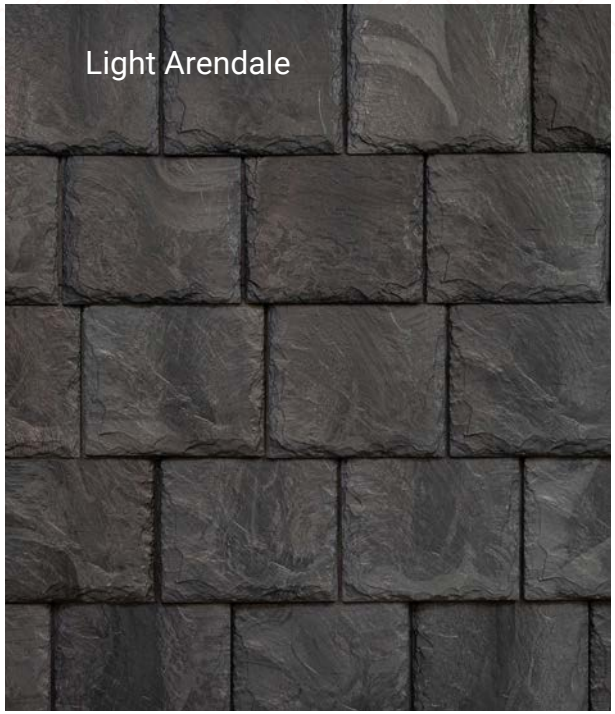

Received March 2, 2026
Planning and Building Department

Mother Nature Inspired Hues

Standard color line of natural color blends gives an authentic look of natural slate tile.

Premium striking color blends complimenting homes that strive for a luxurious look and feel.

Cool Roof Colors (Title 24 compliant) are perfect for any home looking for the benefits of increased energy efficiency.

VIDEO: See how color changes throughout the day and access high resolution photos. **Scan QR Code.**

Received March 2, 2026
Planning and Building Department

Available in Single Width & Multi-Width

Single Width

Single width is standard and presents a more uniform look with all field slates being 12" .

Received March 2, 2026
Planning and Building Department

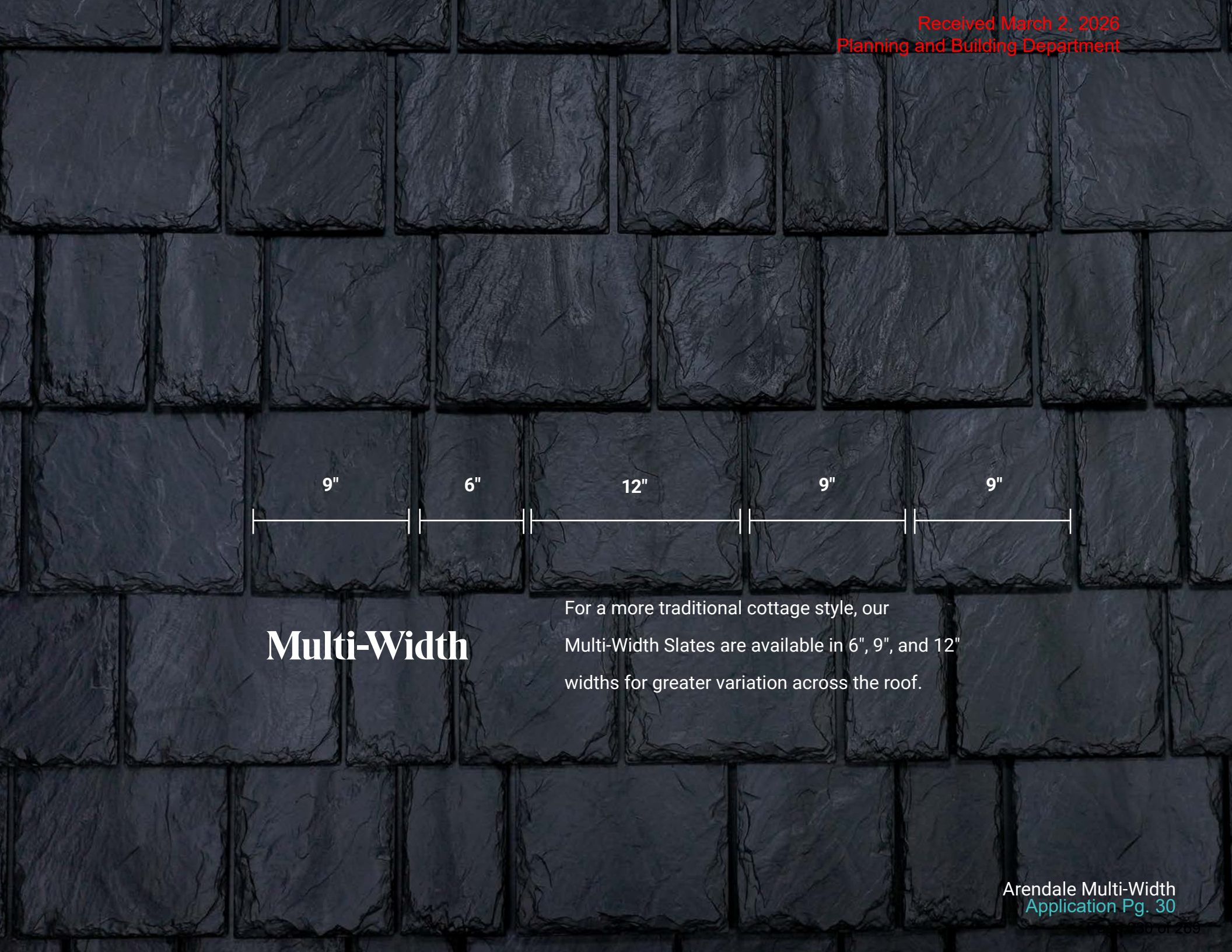

Multi-Width

For a more traditional cottage style, our Multi-Width Slates are available in 6", 9", and 12" widths for greater variation across the roof.

Received March 2, 2026
Planning and Building Department

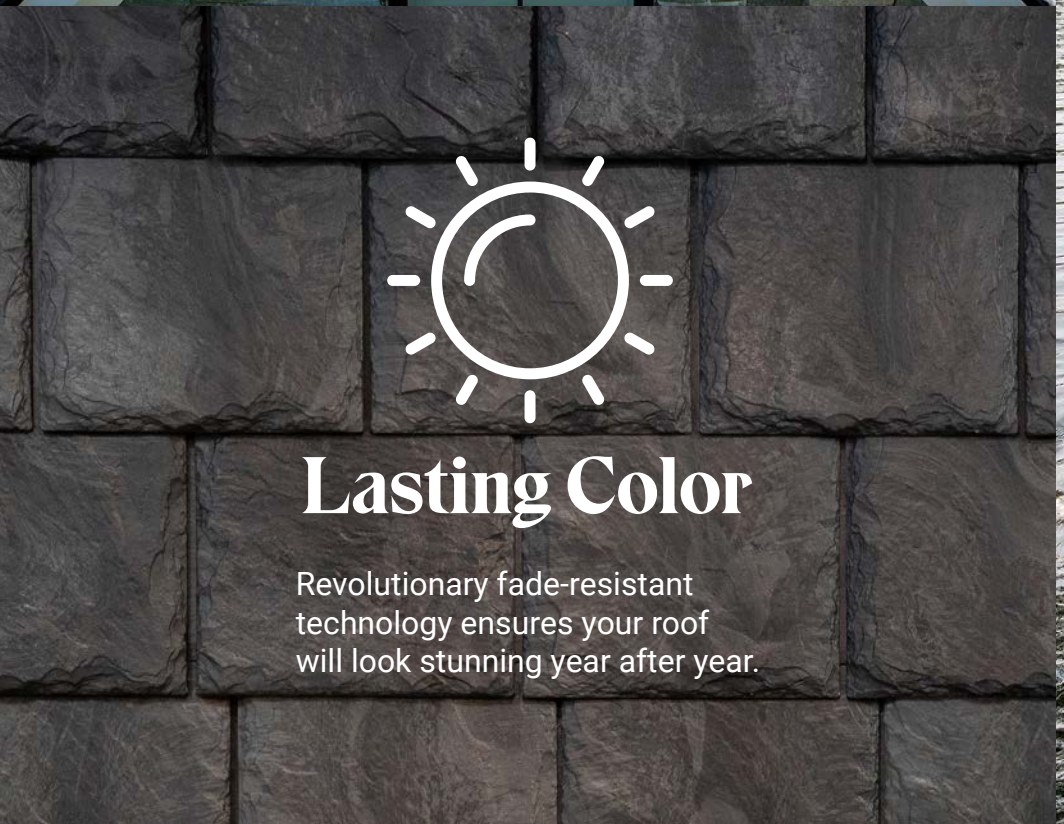

Lasting Color

Revolutionary fade-resistant technology ensures your roof will look stunning year after year.

Received March 2, 2026
Planning and Building Department

Lightweight

BRAVA materials are lightweight enough to be installed on homes without any structural reinforcement.

Received March 2, 2026
Planning and Building Department

Mauchline Manor

VIDEO: See the full story of this historical project - **scan QR Code**.

Received March 2, 2026
Planning and Building Department

Trusted By

Historical

& Landmark Buildings

What we do is more than protecting homes. We set out to impact and inspire our community.

Excellent Match for Historical Materials

Received March 2, 2026
Planning and Building Department

Industry Leading Protection

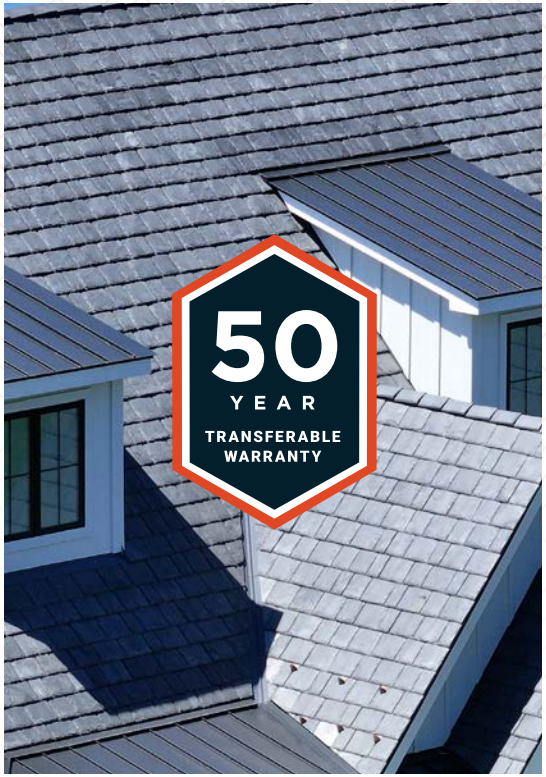

Limited Lifetime Warranty

BRAVA offers a Limited Lifetime Warranty with a coverage period of 50-years making it one of the strongest warranties in the industry.

Fortified Roof Program

Save money with grants and insurance policy discounts with FORTIFIED Roof™. See our website for program requirements and benefits **before** you start your project.

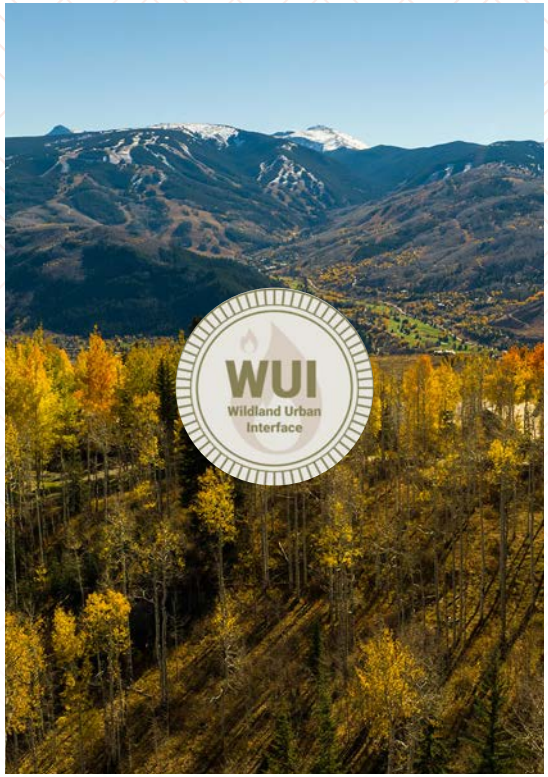

Wildland Urban Interface

Some areas require compliance with the WUI code. BRAVA is a Class A fire rated roofing system and our products are WUI approved and reduce risk of wildfire spread.

Received March 2, 2026
Planning and Building Department

Installed by Factory-Trained Roofing Contractors

When you use a BRAVA Preferred Contractor you will be dealing with a qualified, dependable and professional contractor.

Superior workmanship.

Adequately **insured**.

Passed background check.

Trained by BRAVA.

Consistently shows **ethical** contracting practices in their area.

Committed to **ongoing training**.

BRAVA trains hundreds of installers each year.

Received March 2, 2026
Planning and Building Department

An Integrated System to Keep You Safe & Dry

Slate Tile Roof System

Standard Slate
(Structural Ribbing Back)
Install at all roof sections.
11.8 Bundles per Square

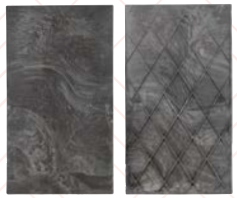

Solid Slate
(Solid Back)
Install at rake and/or valleys (optional upgrade).
23 Bundles per Square

Hip/Ridge Slate
Available in three configurations depending on application and roof pitch: Low (160°), Standard, (120°) Steep (90°).*
8.3 linear feet per bundle

Cut Slates
Factory edge to the outside.

Ice & Water Shield
Recommended at eaves and valleys.

Underlayment
Synthetic recommended.

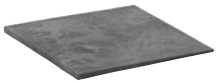

Starter
Install at eaves.
Thick edge installed toward eave.

Note: Images not to scale.
*For more detail on Hip/Ridge angles and application, refer to the installation guide.

Application Pg. 37

Received March 2, 2026
Planning and Building Department

BRAVA Slate Roof Tile

Beautiful appearance that fits your home.

No maintenance costs.

50 YEARS

50-year transferable warranty.

CLASS A

Class A fire rating.

CLASS 4

Highest resistance rating against hail and storm damage.

Lightweight and strong. Does not require any structural changes.

Traditional Quarried Slate

Beautiful appearance that fits your home.

$$

Must be inspected and repaired annually for cracked or slipped tiles, spalling, and fastener failures.

Natural slate is brittle and must be monitored and replaced by a specialist.

CLASS A

Class A fire rating.

More susceptible to hail and storm damage.

Heavyweight requires additional structural reinforcement.

Received March 2, 2026
Planning and Building Department

Build With Authenticity

We work hard every day to be the premier synthetic tile manufacturer in the United States. We're driven by creativity, customer satisfaction, and a commitment to a cleaner planet.

Our tiles support homes and spaces filled with memories, reflect the lives of our customers and are a promise to leave the world better than we found it.

VIDEO: Tour our plant, meet our people and see how BRAVA products are made - **scan this QR code!**

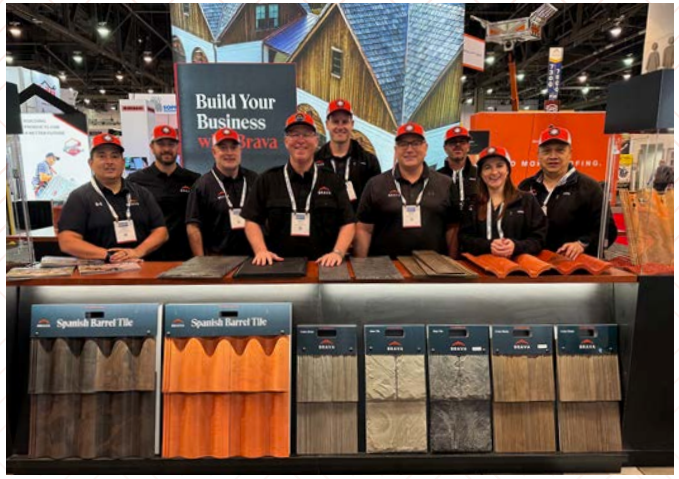

Received March 2, 2026
Planning and Building Department

BRAVA

Brava Old World Slate

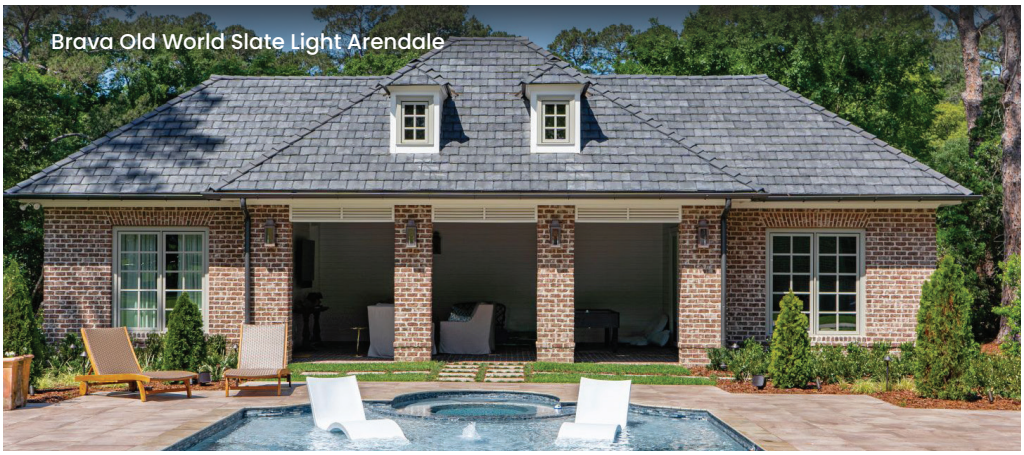
Brava Old World Slate Light Arendale

Brava Old World Slate Onyx

Brava Old World Slate Washington

Brava Old World Slate Atlantic

Beautifully authentic high-performance roofing.

The beautiful look of a slate roof without the maintenance.

Truly realistic
Our proprietary process creates the most authentic-looking old world slate on the market.

Superior performance
Brava is designed to withstand even the most severe weather, boasting the highest hail resistance rating in the industry.

Enhanced curb appeal
Curb appeal directly correlates with owner satisfaction and higher property value.

Maintenance free
Brava's proprietary formulation ensures extreme durability.

Color technology
Brava's proprietary multi-coloring process means you get the authentic appearance of a natural product, complete with variegated colors throughout the entire product.

Fully sustainable
Brava uses recycled material to create a roof that is fully recyclable.

Complete
Brava offers a complete line of accessory tiles.

bravarooftile.com • (844) 290-4196 • info@bravarooftile.com

Received March 2, 2026
Planning and Building Department

Unparalleled Performance

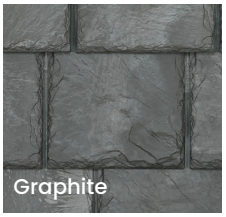

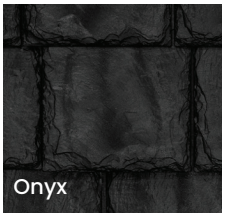

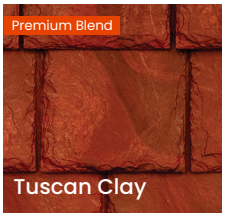

Note: Premium Blend and Title 24 Cool Roof Colors are available as an upcharge from Standard Color pricing. Please consult your sales representative for additional information.

Description	Weight	Dimensions
6" Field Tile	1.4 lbs.	6" x 22"
9" Field Tile	1.8 lbs.	9" x 22"
12" Field Tile	2.7 lbs.	12" x 22"
Starter	1.6 lbs.	12" x 12"
Hip & Ridge	2.0 lbs.	5 $^{5}/_{8}$" x 6" x 16"
Solid Multi-Width Accessory	4.5 lbs.	12" x 22 $^{7}/_{8}$"
Weight Per Square (Standard Slate)	**311 lbs./sq.**	
Weight Per Square (Multi-Width Slate)	**305 lbs./sq.**	

Aesthetics	Brava Old World Slate	Natural Slate
Authentic Look	✓	✓
1" Thickness	✓	✗
Multi-Colored Variegated	✓	Only the most expensive
Solid Accessories for Realistic Installation	✓	✗

Performance	Brava Old World Slate	Natural Slate
Fire Retardant: Class A or Class C	✓	✓
Wind Resistance: 188+ mph*	✓	✗
Impact Resistance: Class 4	✓	Varies by product
Freeze/Thaw Resistant	✓	May spall in alpine regions
Maintenance-Free	✓	Requires inspection and repair throughout the life cycle
Colorfast	✓	Only some varieties
Hail Warrantied	✓	Varies by product

Installation	Brava Old World Slate	Natural Slate
Lightweight	✓	✗
Estimated Waste Factor	Low	High; slates with hairline cracks or broken during install will be discarded
Gun Nailed in Cold Weather	✓	✗

CLASS 4
Class 4 hail rating

CLASS A
Class A fire rating available

Made in USA

MIAMI-DADE COUNTY APPROVED

*Brava tiles are tested and approved to withstand wind speeds of up to 188 mph with nails and up to 211 mph with high wind / screw installation.

Tolerances +or- $^{1}/_{2}$". All specifications subject to change without notice.

The printed colors shown may vary from actual colors. Before making a final selection, be sure to review actual material samples and roof installations. Please contact your salesperson for further assistance.

In order to achieve certain fire and wind ratings, special installation instructions may be required. Please reference Brava Roof Tile installation manuals at www.BravaRoofTile.com for more details.

© Brava 2023 OWS.SS.V9.1223

bravarooftile.com • (844) 290-4196 • info@bravarooftile.com

Received March 2, 2026
Planning and Building Department

BRAVA

Mauchline Manor

A Brava Case Study

Received March 2, 2026
Planning and Building Department

A LEGACY GONE LAX

Located just northwest of the center of Wilmington, Delaware, an expansive property line stretches the length of a city block. Initially part of a sizeable area of farmland owned by the prominent Rodney family of Delaware, it was the property's subsequent owner — Annie Dickie Tallman, wife of DuPont executive Frank Gifford Tallman, Sr. — who brought new life to the land and to the house that stood upon it.

Designed in 1916 by the Philadelphia-based architecture firm Eyre and McIlvaine (led at the time by innovative Italian-born architect Wilson Eyre), the Tudor mansion that still rests on the property today started out as a single-family residence, boasting such amenities as nine bedrooms, five bathrooms, a Great Room, a greenhouse, and a servants' wing. Above the main entrance, "Mauchline" was carved in honor of Annie's father's Scottish birthplace. The Tallmans spared no expense incorporating both top-of-the-line materials and the most modern technology of the time in their new home, which remained in their family for over five decades before being sold to St. Anthony's of Padua Roman Catholic Church in 1971.

From there, Mauchline served a divine purpose, transforming into a convent and housing the Sisters of St. Francis of Philadelphia for nearly four decades. When its last occupant eventually departed, the aging, historic Tudor was then shuttered and left to sit, vacant and virtually untouched, for another decade and a half.

It wasn't until the age of social media that Mauchline was given a chance at resurrection. In 2022, the HGTV program "Cheap Old Houses" sought out profoundly neglected and historically significant homes across the country in the hopes of restoring

Received March 2, 2026
Planning and Building Department

them to their former glory. It featured the mansion on its social channels, and with just three words — "SAVE THIS HOUSE" — the post went viral.

Several offers were considered, but it was two former San Francisco tech leaders who ultimately became Mauchline's latest owners — and who surprised nearly everyone by announcing their intention to fully restore and remake the property into their permanent residence, just as its original owners had nearly 107 years prior.

THE CHALLENGE

Restoring 11,275 square feet of living space is no small feat in any circumstances. But Mauchline, which was listed as "currently uninhabitable" at the time of its latest purchase, presented an array of obstacles that would have given any prospective owner pause: it lacked running water and HVAC; lead paint and asbestos were present; and the electric wiring was, in fact, ancient, being the early knob-and-tube method of the late 1880s to 1930s. In addition, the vast lawn, where a great fountain had once stood, now contained a huge muddy depression.

Then there was the sprawling roof. Asphalt shingles had been installed in the 1980s, replacing the original tile roof that had failed. But the shingles were long past their lifespan, not to mention out of place with the mansion's inherent character and style.

Mauchline's new owners, however, had an ace up their sleeve. Former vice president of San Francisco-based Salesforce Inc. Kevin Simmons and Cheryl Black, a former CEO of YouTech, had the remarkable luck of possessing all of Wilson Eyre's original architectural notes on the home, as well as his correspondence with Frank Tallman. Serving as a construction playbook of the past, from the number of coats of paint and the types of electric and plumbing to the properties of the cement, it proved invaluable when deciding how best to redo the roof.

It was paramount to Simmons and Black that the roof be restored to its original look and feel from when the home was first built, which represented its own challenge: paying homage to the craftsmanship while utilizing more modern technology. The search was on for a roof that would not only provide the utmost in protection and durability but also properly represent the legacy of "Mauchline Manor" (the updated moniker Simmons and Black bestowed upon their residence).

The use of natural slate tile as had originally adorned the home was far from ideal. Having a preexisting strike against it from having already failed once, natural tile came with additional drawbacks: expensive roofing material (slate is one of the most costly types of roofs); a heavier weight (which can necessitate expensive substructure modifications so that weight can be properly supported); greater shipping costs due to that weight; less ease of installation; and no manufacturer warranty. Even so, the homeowners were concerned that without natural slate, they wouldn't be able to authentically replicate Mauchline's original appearance.

When the couple sought a contractor to help them find the best roofing solution, it was, in fact, a tile company that recommended the services of Graven Ramirez and Eagle Eye Roofing. The Bordentown, New Jersey, contractor impressed them with his expertise but also with his artistry. Ramirez's dedication to old-school craftsmanship combined with his eagerness to embrace new technologies made this practically a fated partnership — and just as fated was when the contractor introduced the homeowners to BRAVA.

Received March 2, 2026
Planning and Building Department

THE BRAVA ADVANTAGE

"We chose BRAVA simply because in the synthetic tile space, they really make a top-quality product. The look and feel is as close to slate as it can possibly look."

— Kevin Simmons, Homeowner, Mauchline Manor

Even though Simmons and Black felt an instant kinship with Ramirez, they nevertheless did their own research into the composite roofing manufacturer, its products, and the expected longevity of a BRAVA roof. The homeowners agreed that BRAVA's old world slate polymer tile, with its rich, natural-looking hues and thick profile — the thickest synthetic slate roof profile available — would be the right fit for the project. They were impressed with BRAVA's commitment to making a top-quality product, even going so far as to research how the manufacturer infuses color into every piece of its roofing tile — which assured them that if any ever needed replacing, their roof's overall look would remain seamless.

For Mauchline Manor's impressively large roof with its two prominent gables, Eagle Eye installed BRAVA's Composite Slate Roof Tile, adding copper details to further highlight its beauty. The homeowners couldn't have been more pleased with the roof's stunningly realistic look, as well as its ability to properly represent the home and its storied history.

Ramirez's company offers all three of BRAVA's product profiles, finding that customers love both the affordability and the authentic look of its color blends while the contractor appreciates the BRAVA tile's lighter weight and ease of install — along with the opportunity it affords to offer customers top-of-the-line durability and protection without sacrificing the incredible aesthetics of natural slate.

Being extremely eco-conscious, Simmons and Black also chose BRAVA's slate roofing tile due to its sustainability, versus mining for natural slate. That, combined with its unsurpassed performance, dependable longevity, and incredible color exposure, gave the homeowners everything they were looking for — and then some.

PROJECT
Mauchline Manor

LOCATION
Wilmington, DE

PROJECT TYPE
Historic Restoration

ROOF AREA
100 Squares

ROOFING PRODUCTS
BRAVA Composite Slate Tile | Color: Atlantic

ARCHITECTS
Wilson Eyre & John Gilbert McIlvaine

CONTRACTOR
Eagle Eye Roofing

MARKET
Cultural / Local Community

THE BENEFITS OF BRAVA

Durability
BRAVA's composite roof tiles create a natural slate appearance, with a 50-year warranty. Longevity and low maintenance offer an excellent ROI.

High Wind Resistance
BRAVA tiles meet high quality standards, endure extreme weather, and pass wind tests up to 188 MPH with nails and 211 MPH with screw installation.

Environmentally Friendly
Our sustainable polymer roofing, crafted from recycled materials, outlasts natural slate, offering durability without the maintenance of natural slate tiles.

Ease of Installation
Our slate roofing system with installation accessories requires no additional structural support, which is ideal for new construction and re-roofs for various projects.

BRAVA Build with BRAVA

BRAVA Roof Tile
915 E. Tyler Street, Washington, IA 52353
bravarooftile.com | 844-290-4196
©2024 Brava Roof Tile 10/24

Received March 2, 2026
Planning and Building Department

BRAVA

Florida Product Approvals

Based on the limitations referenced below and verified by QAI Laboratories Ltd, these products meet all applicable requirements of the 8th Edition **2023 Florida Building Code, including for High Velocity Hurricane Zones (HVHZ)**. View extract source information on the Florida Department of Business & Professional Regulation (dbpr) page.

Product Name	Florida Product Approval	Evaluation Report
BRAVA CEDAR SHAKE Polymeric Roof Coverings Simulating Natural Wood Shake Class A and Class C Fire Ratings Available*	**FL# 41880.1** Approved for use in HVHZ Approved for use outside HVHZ Impact Resistant Design Pressure: **-196 psf**	**CERus-1014** QAI Laboratories Code Evaluation Report confirms testing and code compliance when installed per **installation instructions**.
BRAVA SLATE & **BRAVA MULTI-WIDTH SLATE** Polymeric Roof Coverings Simulating Natural Slate Class A and Class C Fire Ratings Available*	**FL# 41880.2** Approved for use in HVHZ Approved for use outside HVHZ Impact Resistant Design Pressure: **-206 psf**	**CERus-1014** QAI Laboratories Code Evaluation Report confirms testing and code compliance when installed per **installation instructions**.
BRAVA SPANISH BARREL TILE Polymeric Roof Coverings Simulating Clay Barrel Tile Class A and Class C Fire Ratings Available*†	**FL# 41880.3** Approved for use in HVHZ Approved for use outside HVHZ Impact Resistant Design Pressure: **-202 psf**	**CERus-1014** QAI Laboratories Code Evaluation Report confirms testing and code compliance when installed per **installation instructions**.
BRAVA FLAT TILE Polymeric Roof Coverings Simulating Concrete Flat Tile Class A and Class C Fire Ratings Available*	**FL# 41880.4** Approved for use in HVHZ Approved for use outside HVHZ Impact Resistant Design Pressure: **-109 psf**	**CERus-1014** QAI Laboratories Code Evaluation Report confirms testing and code compliance when installed per **installation instructions**.

*The best way to ensure correct installations is to require **Level 1 Installation Training** for every crew member. All code compliance approvals remain contingent on installation practices that follow the published standards referenced in the evaluation report. Full installation guidelines, technical resources, codes and testing information, and training materials are available at **bravarooftile.com/resources** and bravarooftile.com/training.*

*Brava One Formulation is rated as Class C when installed with standard underlayment. Brava Cedar Shake and Brava Slate Systems have been tested and certified as Class A when specified fire-resistant (FR) underlayments are used.
Brava Flat Tile fire testing is in progress. Confirm code eligibility for fire-rated Flat Tile assemblies.

† Brava Spanish Barrel Tile can be installed as a Class A Fire-Rated system when Class A material is installed over GAF VersaShield FR underlayment.

For more details on Brava roof system fire resistance and ratings, review TB-241202 at bravarooftile.com/resources.

Received March 2, 2026
Planning and Building Department

DEPARTMENT OF REGULATORY AND ECONOMIC RESOURCES (RER)
BOARD AND CODE ADMINISTRATION DIVISION

MIAMI-DADE COUNTY
PRODUCT CONTROL SECTION
11805 SW 26 Street, Room 208
Miami, Florida 33175-2474
T (786) 315-2590 F (786) 315-2599
www.miamidade.gov/economy

NOTICE OF ACCEPTANCE (NOA)

Brava Roof Tile
915 E. Tyler Street
Washington, IA 52353

SCOPE:

This NOA is being issued under the applicable rules and regulations governing the use of construction materials. The documentation submitted has been reviewed and accepted by Miami-Dade County RER - Product Control Section to be used in Miami Dade County and other areas where allowed by the Authority Having Jurisdiction (AHJ).

This NOA shall not be valid after the expiration date stated below. The Miami-Dade County Product Control Section (In Miami Dade County) and/or the AHJ (in areas other than Miami Dade County) reserve the right to have this product or material tested for quality assurance purposes. If this product or material fails to perform in the accepted manner, the manufacturer will incur the expense of such testing and the AHJ may immediately revoke, modify, or suspend the use of such product or material within their jurisdiction. RER reserves the right to revoke this acceptance, if it is determined by Miami-Dade County Product Control Section that this product or material fails to meet the requirements of the applicable building code.
This product is approved as described herein, and has been designed to comply with the Florida Building Code including the High Velocity Hurricane Zone of the Florida Building Code.

DESCRIPTION: **Brava Slate**

LABELING: Each unit shall bear a permanent label with the manufacturer's name or logo, city, state and following statement: "Miami-Dade County Product Control Approved", unless otherwise noted herein.

RENEWAL of this NOA shall be considered after a renewal application has been filed and there has been no change in the applicable building code negatively affecting the performance of this product.

TERMINATION of this NOA will occur after the expiration date or if there has been a revision or change in the materials, use, and/or manufacture of the product or process. Misuse of this NOA as an endorsement of any product, for sales, advertising or any other purposes shall automatically terminate this NOA. Failure to comply with any section of this NOA shall be cause for termination and removal of NOA.

ADVERTISEMENT: The NOA number preceded by the words Miami-Dade County, Florida, and followed by the expiration date may be displayed in advertising literature. If any portion of the NOA is displayed, then it shall be done in its entirety.

INSPECTION: A copy of this entire NOA shall be provided to the user by the manufacturer or its distributors and shall be available for inspection at the job site at the request of the Building Official.

This NOA revises NOA# 21-1213.04 and consists of pages 1 through 6.
The submitted documentation was reviewed by Alex Tigera.

08/14/25

NOA No.: 24-0620.05
Expiration Date: 04/28/27
Approval Date: 08/14/25

Received March 2, 2026
Planning and Building Department

ROOFING ASSEMBLY APPROVAL

Category:	Roofing
Sub-Category:	Roofing Slate
Materials	Composite
Deck Type:	Wood
Maximum Design Pressure	**–193.5 psf.**
Fire Classification Pressure	See General Limitation #1

TRADE NAMES OF PRODUCTS MANUFACTURED OR LABELED BY APPLICANT:

Product	Dimensions	Test Specifications	Product Description
Brava Slate	Length: 22” Width: 6”, 9”, and 12” Thickness: 0.80” tapered to 0.16”	TAS 125	Slate looking composite shingle for use in mechanically attached systems.

MANUFACTURING LOCATION:

1. Washington, IA.

EVIDENCE SUBMITTED:

Test Agency	Test Identifier	Test Name/Report	Date
ETC Laboratories	ETC-07-718-20130.0 ETC-07-718-20130.0 ETC-07-718-20130.0	ASTM D 2843 ASTM D 1929 ASTM D 635	10/10/07 10/10/07 10/10/07
PRI Construction Materials Technologies	TMIC-006-02-02	ASTM G 155	06/18/08
Southwest Research Institute	01.13537.01.301b	ASTM E 108	01/18/08
Intertek / Architectural Testing	E5336.01-106-18	Physical Properties	04/29/15
QAI Laboratories	MED2021c MED2022a-RT2	TAS 125 TAS 100	01/10/25 05/29/25

Received March 2, 2026
Planning and Building Department

APPROVED ASSEMBLIES:

System A:	**Brava Slate**
Deck Type:	Wood, Non-Insulated
Deck Description:	New Construction $^{19}/_{32}$" or greater plywood or wood plank, or for re-roofing $^{15}/_{32}$" or greater plywood.
Slope Range:	3-$^{1}/_{2}$": 12" or greater
Maximum Uplift Pressure:	**-193.5psf** (See Limitation #2)

Deck Attachment: In accordance with applicable building code, but in no case shall it be less than # 8d annular ring shank nails spaced 6" o.c. In reroofing, where the deck is less than $^{19}/_{32}$" thick (Minimum $^{15}/_{32}$") the above attachment method must be in addition to existing attachment.

Underlayment: Minimum underlayment shall be an ASTM D 226 Type II installed with a minimum 4" side-lap and 6" end-laps. Underlayment shall be fastened with corrosion resistant tin-caps and 12 gauge 1 ¼" annular ring-shank nails, spaced 6" o.c. at all laps and two staggered rows 12" o.c. in the field of the roll. Or, any approved underlayment having a current NOA.

Fire Barrier: Any approved fire barrier having a current NOA. Refer to a current fire directory listing for fire ratings of this roofing system assembly as well as the location of the fire barrier within the assembly. See Limitation # 1.

Valleys: Valley construction shall be in compliance with Roofing Application Standard RAS 118 and with Brava Roof Tile's current published installation instructions.

Hips & Ridges: See Brava Roof Tile's current published installation instructions.

Eave Starter: See Brava Roof Tile's current published installation instructions.

Slate Installation: Install the "Brava Slate" and accessories in compliance with the current published installation instructions and details in Brava Roof Tile's Installation Guide. Flashings, penetrations, valley construction and other details shall be constructed in compliance with Roofing Application Standard RAS 118.

Each slate is installed with two (2) #8 by 2" long, corrosion resistant coarse thread exterior screws through the designated fastener locator. **(See Detail A)**.

The adjoining Slate is laid next to the existing Slate with a 3/8" gap. The next row is laid with an 10" exposure. **(See Detail B)**.

Received March 2, 2026
Planning and Building Department

GENERAL LIMITATIONS:

1. Fire classification is not part of this acceptance; refer to a current Approved Roofing Materials Directory for fire ratings of this product.
2. The maximum designed pressure limitation listed shall be applicable to all roof pressure zones (i.e. field, perimeters, and corners). Neither rational analysis, nor extrapolation shall be permitted for enhanced fastening at enhanced pressure zones (i.e. perimeters, extended corners and corners).
3. Each slate tile shall be permanently labeled with the manufacturer's name and/or logo, and the following statement: "Miami-Dade County Product Control Approved" **or** with the Miami-Dade County Product Control Seal as seen below.

MIAMI-DADE COUNTY
APPROVED

4. All products listed herein shall have a quality assurance audit in accordance with the Florida Building Code and Rule 61G20-3 of the Florida Administrative Code.

Received March 2, 2026
Planning and Building Department

PROFILE DRAWINGS

DETAIL A

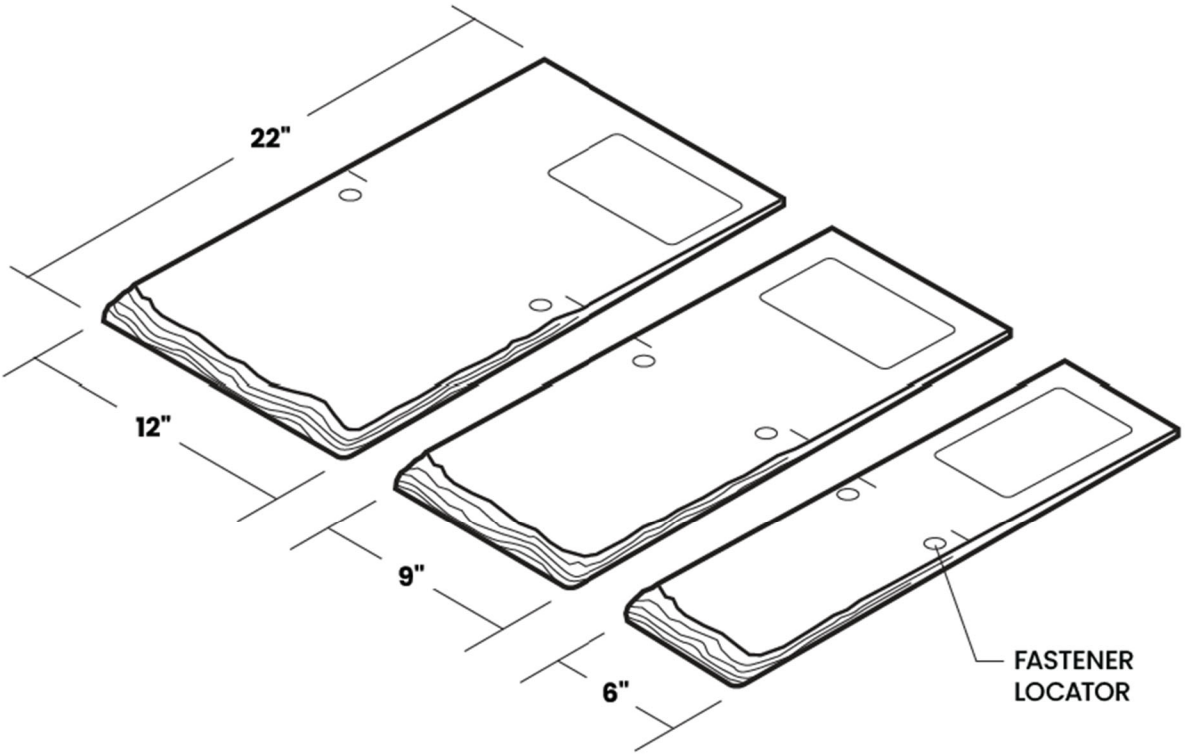

BRAVA SLATE

Received March 2, 2026
Planning and Building Department

DETAIL B

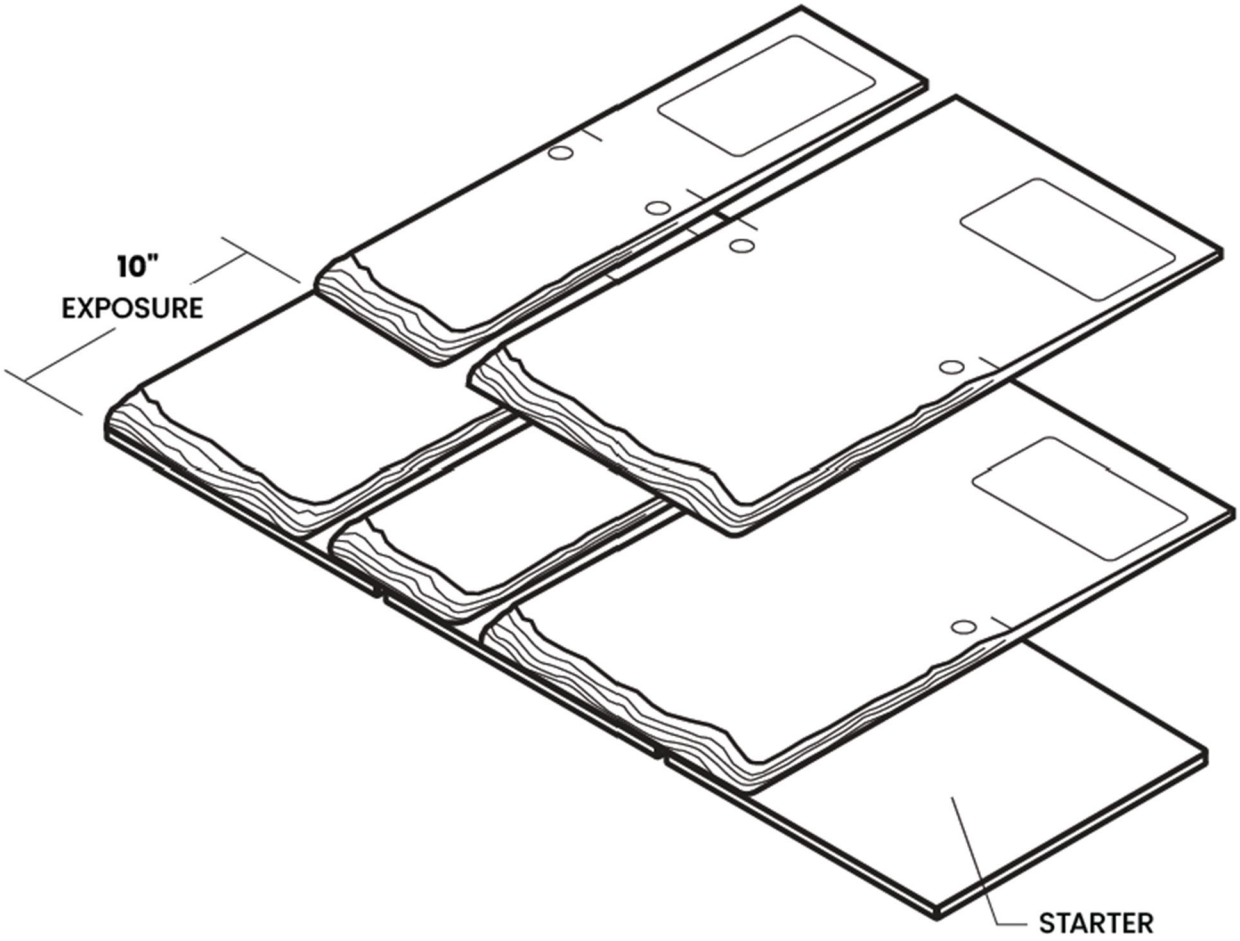

END OF THIS ACCEPTANCE

Received March 8, 2026
Planning and Building Dept.

Cody Bates

FL Specialty Roofing

Mar 6, 2026 | 25 Photos

Brava Slate

Received March 8, 2026
Planning and Building Dept.

Section 1

Application Pg. 54
Page 254 of 269

Received March 8, 2026
Planning and Building Dept.

1

Project: Ancient City Baptist Church
Date: Aug 27, 2025, 9:38 AM
Creator: Cody Bates

2

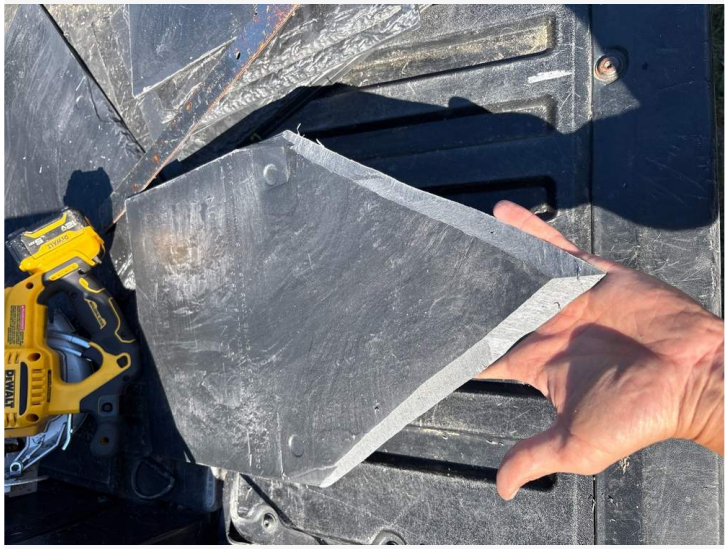

Project: Ancient City Baptist Church
Date: Aug 27, 2025, 10:09 AM
Creator: Cody Bates

3

Project: Ancient City Baptist Church
Date: Aug 27, 2025, 10:14 AM
Creator: Cody Bates

4

Project: Ancient City Baptist Church
Date: Aug 27, 2025, 11:31 AM
Creator: Cody Bates

Received March 8, 2026
Planning and Building Dept.

5

Project: Ancient City Baptist Church
Date: Aug 27, 2025, 11:54 AM
Creator: Cody Bates

6

Project: Ancient City Baptist Church
Date: Aug 27, 2025, 12:29 PM
Creator: Cody Bates

Received March 8, 2026
Planning and Building Dept.

7

Project: Ancient City Baptist Church
Date: Aug 27, 2025, 12:44 PM
Creator: Cody Bates

8

Project: Ancient City Baptist Church
Date: Aug 29, 2025, 12:47 PM
Creator: Cody Bates

Received March 8, 2026
Planning and Building Dept.

9

Project: Ancient City Baptist Church
Date: Mar 6, 2026, 10:37 AM
Creator: Cody Bates

10

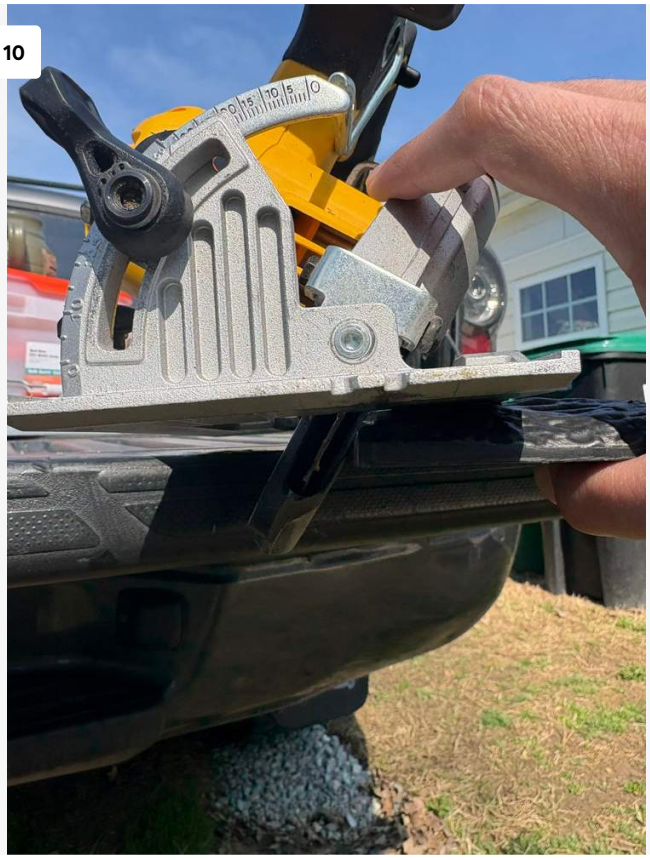

Project: Ancient City Baptist Church
Date: Mar 6, 2026, 10:38 AM
Creator: Cody Bates

Received March 8, 2026
Planning and Building Dept.

11

Project: Ancient City Baptist Church
Date: Mar 6, 2026, 10:39 AM
Creator: Cody Bates

12

Project: Ancient City Baptist Church
Date: Mar 6, 2026, 10:41 AM
Creator: Cody Bates

Received March 8, 2026
Planning and Building Dept.

13

Project: Ancient City Baptist Church
Date: Mar 6, 2026, 10:42 AM
Creator: Cody Bates

14

Project: Ancient City Baptist Church
Date: Mar 6, 2026, 10:43 AM
Creator: Cody Bates

Received March 8, 2026
Planning and Building Dept.

15

Project: Ancient City Baptist Church
Date: Mar 6, 2026, 10:44 AM
Creator: Cody Bates

16

Project: Ancient City Baptist Church
Date: Mar 6, 2026, 10:45 AM
Creator: Cody Bates

Received March 8, 2026
Planning and Building Dept.

17

Project: Ancient City Baptist Church
Date: Mar 6, 2026, 10:46 AM
Creator: Cody Bates

18

Project: Ancient City Baptist Church
Date: Mar 6, 2026, 10:46 AM
Creator: Cody Bates

Received March 8, 2026
Planning and Building Dept.

19

Project: Ancient City Baptist Church
Date: Mar 6, 2026, 10:51 AM
Creator: Cody Bates

20

Project: Ancient City Baptist Church
Date: Mar 6, 2026, 10:52 AM
Creator: Cody Bates

Received March 8, 2026
Planning and Building Dept.

21

Project: Ancient City Baptist Church
Date: Mar 6, 2026, 10:53 AM
Creator: Cody Bates

22

Project: Ancient City Baptist Church
Date: Mar 6, 2026, 10:54 AM
Creator: Cody Bates

Received March 8, 2026
Planning and Building Dept.

23

Project: Ancient City Baptist Church
Date: Mar 6, 2026, 10:54 AM
Creator: Cody Bates

24

Project: Ancient City Baptist Church
Date: Mar 6, 2026, 10:55 AM
Creator: Cody Bates

Received March 8, 2026
Planning and Building Dept.

25

Project: Ancient City Baptist Church
Date: Mar 6, 2026, 10:55 AM
Creator: Cody Bates

Application Pg. 67
Page 267 of 269

CITY OF ST AUGUSTINE

MEMORANDUM

To: The Historic Architectural Review Board

Date: March 19, 2026

Re: Issued Planning and Building Permits – HP Districts & HARB Approved Projects

During the month of February 2026, the Planning and Building Department issued the following permits for projects meeting pre-approved guidelines and/or HARB approved plans:

REPAIR, MAINTENANCE, AND NEW CONSTRUCTION

215 St. George Street (HVAC changeout)

41 King St (210 St. George St) (Repairs of a window planter leak and low slope roof)

6 Aviles Street (Commercial Renovation with wall covering & lighting updates)

25 Cordova Street (HVAC changeout)

27 Cuna Street (Re-roof with Watkins Sawmills Wood Shakes)

38 Park Ave (Interior/Exterior Renovation: kitchen and bath remodel; HARB approved siding; windows and roof replacement; and a 140 SF addition.)

DEMOLITIONS

78A Chapin St (HARB approved demolition of building)

SIGNS

121 St. George St (Roosevelt Room- Replacement of existing hanging sign with same design and colors)

Michelle Triantafyllidis

Michelle Triantafyllidis, Planning and Building Clerk

CITY OF
ST AUGUSTINE
EST. 1565
NATION'S OLDEST CITY

March 19, 2026

Dear Paul:

For almost half of a century, you have devoted your professional life to the preservation, documentation, and designation of the historic places that define St. Augustine and many historic resources and neighborhoods throughout the state, that in turn contribute so greatly to Florida's cultural legacy. Through your scholarship, professional practice, and civic leadership, you have helped safeguard hundreds of historic resources while expanding public understanding of the city and state's rich architectural and cultural history.

In addition to the many big contributions that you made during your various roles with State agencies, you have left a large impact through the work you have completed under your consulting company, Historic Property Associates, Inc. For example, you contributed to the nomination process of numerous important resources and neighborhoods being designated to the National Register of Historic Places, both in St. Augustine and across the state. With the numerous publications you have worked on, you helped deepen public appreciation of St. Augustine's history and the built environment.

Besides the prolific work that you have accomplished throughout your career, your longstanding record of public service is especially notable. You were appointed to and served on the City of St. Augustine's Historic Architectural Review Board (HARB) for more than twenty years, including terms as both Chair and Vice Chair. With your longstanding service, you have regularly helped provide the Board with institutional knowledge. In your various roles, you helped guide the thoughtful stewardship of the St. Augustine's historic resources while contributing to improvements in the City's Architectural Guidelines for Historic Preservation (AGHP), the demolition ordinance, and preservation planning efforts.

Thank you so much for your many years of service to the Historic Architectural Review Board!

Appointed 3/10/2003 1st full term ending 3/28/2006 ***(Vice Chair)***
Re-appointed 3/28/2006 2nd full term ending 3/28/2009 ***(Chair)***
Appointed 4/27/2009 to fill a vacancy, term ending 3/28/2011
Appointed 3/28/2011 for 1st full term ending 3/28/2014
Appointed 3/24/2014 for 2nd full term ending 3/28/2017 – ***(Chair and Vice Chair)***
Appointed 5/14/2018 to fill vacancy as Alternate, term ending 3/28/2019
Appointed 6/25/2018 to fill vacancy for a term ending 3/28/2020
Appointed 4/27/2020 for 1st full term ending 3/28/2023
Appointed 3/13/2023 for 2nd full term ending in 3/28/2026

In addition, in 1987, you helped prepare the first Historic Preservation Plan Element for the City of St. Augustine Comprehensive Plan. This document formally integrated historic preservation into the City's long-range planning framework and established preservation as a guiding principle for growth and development. The plan helped ensure that St. Augustine's historic character, one of our greatest assets, would remain central to policy decisions for generations.

Your knowledge, professionalism, and enduring commitment to protecting the historic neighborhoods, architecture, and cultural heritage of St. Augustine and the other neighborhoods in Florida, have left an indelible mark on our community and the state. It is our great privilege to have worked with you over the years that you served on the Historic Architectural Review Board (HARB). Paul, *thank you for all you have done* to preserve and record the unique and special of places in St. Augustine and across the state of Florida!

With much appreciation, gratitude, and respect,

Julie Courtney
Historic Preservation Officer

Candice Seymour
Historic Preservation Planner